Models:

ACC / A5CC 10C/CR
ACC / A5CC 15C/CR
ACC / A5CC 20C/CR
ACC / A5CC 25C/CR
ACC / A5CC 28C/CR
ACC 30C/CR
ACC / A5CC 38C/CR
ACC 40C/CR
ACC / A5CC 50C/CR
ACC / A5CC 60C/CR

ACSON International

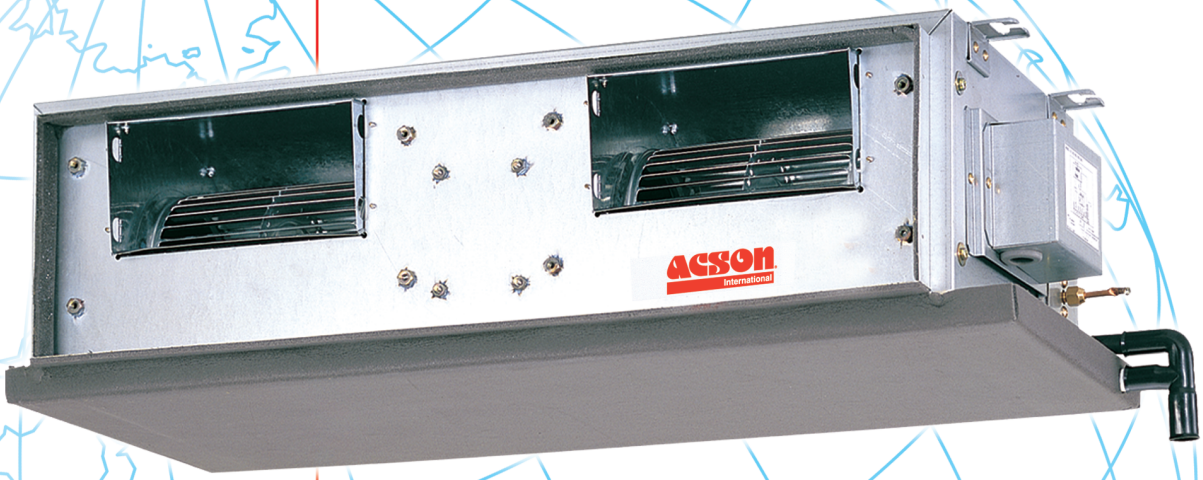

Ceiling Concealed Split Systems

ACC-C_(i)

TABLE OF CONTENTS

1. NOMENCLATURE.....1
   - PRODUCT LINE-UP
2. FEATURES.....8
3. APPLICATION INFORMATION.....9
   - OPERATING RANGE
   - REFRIGERANT CIRCUIT DIAGRAMS
   - CONTROLLERS
   - PRECAUTION AND INSTALLATION
4. SOUND DATA.....27
5. SELECTION PROCESS.....41
   - FAN PERFORMANCE CHART
6. ENGINEERING & PHYSICAL DATA.....77
   - GENERAL DATA
   - COMPONENTS DATA
   - SAFETY DEVICES
7. PERFORMANCE DATA.....148
   - PERFORMANCE TABLE
8. OUTLINE AND DIMENSION.....205
9. ELECTRICAL DATA.....209
10. WIRING DIAGRAMS.....223
11. SERVICING AND MAINTENANCE.....248
12. TROUBLESHOOTING.....250
13. EXPLODED VIEW & PART LIST.....255

This manual supercedes ACC-2009

1. NOMENCLATURE

Indoor

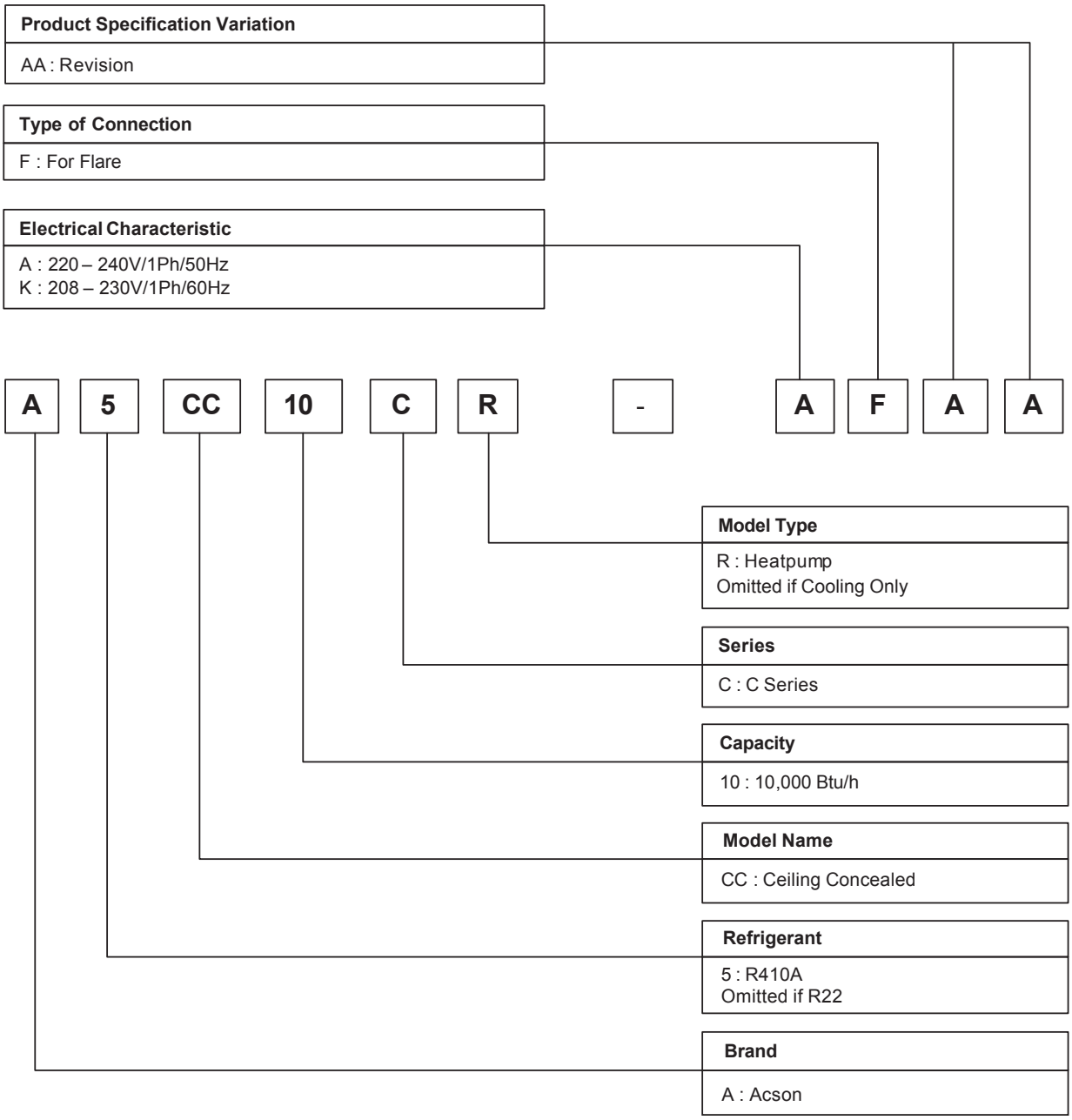

Outdoor

Others

A : First issue

Specifications Variation

O : Standard Unit
B : with Contactor
G : Low Ambient Unit
H : High Ambient Unit
I : Gold Fins
L : Long Piping Unit
S : With H/L Pressure Switch
X : Oxygen Unit

Compressor

P : Matsushita Rotary
M : Mitsubishi Rotary
T : Toshiba Rot ary

Market Region

C : Export with CE marking
E : Export without marking
U : ETL spec

Electrical

A : 220 -240V/1Ph/50Hz

A	5	LC	10	C	R	-	A	C	P	O	A

Model Type

R : Heatpump
Omitted if Cooling Only

Series

C : C series

Capacity

10 : 10,000 Bth/h

Model Name

LC : Single Split Condensing Unit

Refrigerant

5 : R410A
Omitted if R22 Model

Brand

A : Acson

Outdoor

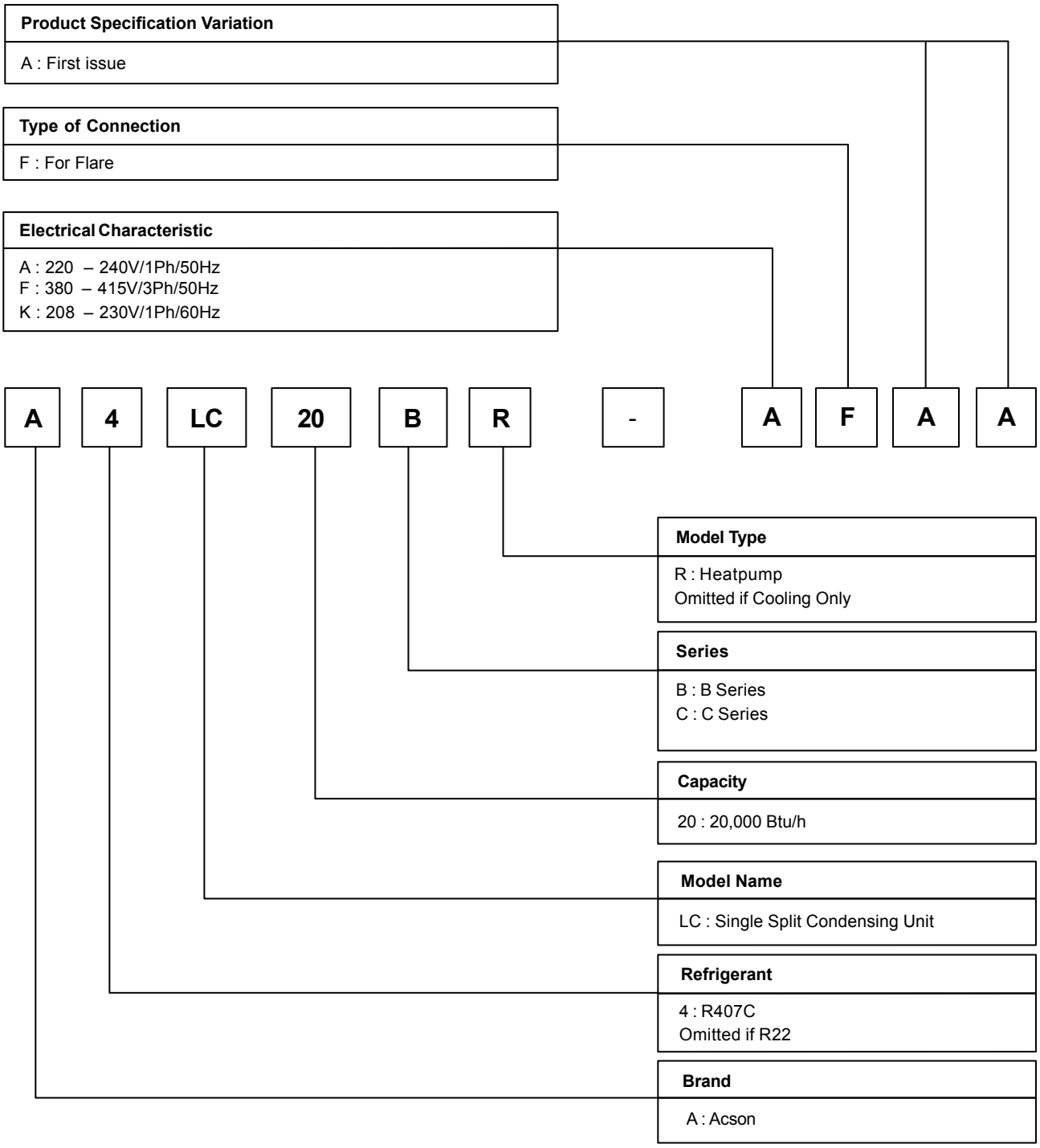
Product Specification Variation
A : First issue
Type of Connection
F : For Flare
Electrical Characteristic
A : 220 – 240V/1Ph/50Hz
F : 380 – 415V/3Ph/50Hz
K : 208 – 230V/1Ph/60Hz
A 4 LC 20 B R - A F A A
Model Type
R : Heatpump
Omitted if Cooling Only
Series
B : B Series
C : C Series
Capacity
20 : 20,000 Btu/h
Model Name
LC : Single Split Condensing Unit
Refrigerant
4 : R407C
Omitted if R22
Brand
A : Acson

Product Line Up
Indoor Unit
ACC-C Series Product Line Up (R22)

Cooling Only Model

ACC		NONMENCLATURE	CLASSIFICATION													
			Control	Handset		Marking			Refrigerant Control		Filter		Drain Pan		Low Static Model	Built-in Filter Rail
			L2 08A	SLM3	NETWARE 3	CE Mark	W/out Marking	ETL	Cap. Tube	W/out Cap. Tube	Air Filter	W/out Air Filter	Metal Drain Pan	EPS Drain Pan		
Cooling Model	10C	AFDC	X	X		X				X	X			X		
		AFDD	X		X	X				X	X			X		
		AFLB	X	X		X				X	X			X	X	
		AFLC	X	X		X				X	X		X		X	
	15C	AFDC	X	X		X				X	X			X		
		AFDD	X		X	X				X	X			X		
		AFLB	X	X		X				X	X			X	X	
		AFLC	X	X		X				X	X		X		X	
	20C	AFDC	X	X		X				X	X			X		
		AFDD	X		X	X				X	X			X		
		AFLB	X	X		X				X	X			X	X	
		AFLC	X	X		X				X	X		X		X	
	25C	AFDC	X	X		X				X	X			X		
		AFDD	X		X	X				X	X			X		
		AFLB	X	X		X				X	X			X	X	
		AFLC	X	X		X				X	X		X		X	
	28C	AFAC	X	X		X			X		X					X
		AFCD	X		X	X			X		X					X
	30C	AFBC	X	X		X			X		X					X
		AFCD	X		X	X			X		X					X
		AFLB	X	X		X			X		X				X	X
	38C	AFAC	X	X		X			X		X					X
		AFCD	X		X	X			X		X					X
	40C	AFBC	X	X		X			X		X					X
		AFCD	X		X	X			X		X					X
		AFLB	X	X		X			X		X				X	X
	50C	AFBC	X	X		X			X		X					X
		AFCD	X		X	X			X		X					X
		AFLB	X	X		X			X		X				X	X
	60C	AFBC	X	X		X			X		X					X
		AFCD	X		X	X			X		X					X
		AFLB	X	X		X			X		X				X	X
Heat Pump Model	10CR	AFDC	X	X		X				X	X			X		X
		AFDD	X		X	X				X	X			X		
		AFLB	X	X		X				X	X			X	X	
	15CR	AFDC	X	X		X				X	X			X		
		AFDD	X		X	X				X	X			X		
		AFLB	X	X		X				X	X			X	X	
	20CR	AFDC	X	X		X				X	X			X		
		AFDD	X		X	X				X	X			X		
		AFLB	X	X		X				X	X			X	X	
	25CR	AFDC	X	X		X				X	X			X		
		AFDD	X		X	X				X	X			X		
		AFLB	X	X		X				X	X			X	X	
	28CR	AFAA	X	X		X				X	X					X
		AFCD	X		X	X				X	X					X
	30CR	AFBB	X	X		X				X	X					X
		AFCD	X		X	X				X	X					X
		AFLB	X	X		X				X	X				X	X
	38CR	AFAA	X	X		X				X	X					X
		AFCD	X		X	X				X	X					X
	40CR	AFBB	X	X		X				X	X					X
		AFCD	X		X	X				X	X					X
		AFLB	X	X		X				X	X				X	X
	50CR	AFBB	X	X		X				X	X					X
		AFCD	X		X	X				X	X					X
		AFLB	X	X		X				X	X				X	X
	60CR	AFBB	X	X		X			X		X					X
		AFCD	X		X	X			X		X					X
		AFLB	X	X		X				X	X				X	X

Indoor Unit
A5CC-C Series Product Line Up (R410A)

A5CC		NONMENCLATURE	CLASSIFICATION							
			Control	Handset		Marking	Refrigerant Control	With Air Filter	With EPS Drain Pan	Built in Filter Rail
			L2 08A	SLM	Netware III	CE Mark	W/out Cap.Tube			
Cooling Model	10C	AFBA	X	X		X	X	X	X	
	15C	AFBA	X	X		X	X	X	X	
	20C	AFBA	X	X		X	X	X	X	
	25C	AFBA	X	X		X	X	X	X	
	28C	AFBA	X	X		X	X	X		X
	38C	AFAA	X	X		X	X	X		X
	50C	AFAA	X	X		X	X	X		X
	60C	AFAA	X	X		X	X	X		X
Heatpmup Model	10CR	AFBA	X	X		X	X	X	X	
	15CR	AFBA	X	X		X	X	X	X	
	20CR	AFBA	X	X		X	X	X	X	
	25CR	AFBA	X	X		X	X	X	X	
	28CR	AFBA	X	X		X	X	X		X
	38CR	AFAA	X	X		X	X	X		X
	50CR	AFAA	X	X		X	X	X		X
	60CR	AFAA	X	X		X	X	X		X

Outdoor Unit
ALC-C Product Line Up (R22)

	ALC		Nomenclature	Classification															
				Refrigerant Ctrl + Fin			Special		Safety Devices					Grille	Compressor		Marking	
				Cap. Tube	TXV	Gold Fin	High Ambient Kit	Low Ambient Kit	Contactor	High Pressure Switch	Low Pressure Switch	Nantong Press. SW	Phase Sequencer	Drain Elbow	Copeland Scroll Comp.	Rotary	CE Marking	ETL
Cooling Model	10C	ACPOB		X												X	X	
		ACPIB		X		X										X	X	
	15C	ACPOD		X												X	X	
		ACPID		X		X										X	X	
	18C	ACPOD		X												X	X	
		ACPBD		X					X							X	X	
		ACPID		X		X										X	X	
	20C	ACPOD		X												X	X	
		ACPID		X		X										X	X	
		ACPBD		X					X							X	X	
	25C	ACPOD		X												X	X	
		ACPBD		X					X							X	X	
		ACPID		X		X										X	X	
	28C	ACHOB														X	X	
		ACHBB							X							X	X	
		ACHIB				X										X	X	
	30D	ACCOA							X	X	X	X			X		X	
		ACCIA				X			X	X	X	X			X		X	
		FCCOA							X	X	X	X	X		X		X	
		FCCIA				X			X	X	X	X	X		X		X	
	35D	ACCOA							X	X	X	X			X		X	
		ACCIA				X			X	X	X	X			X		X	
	40D	ACCOA							X	X	X	X			X		X	
		ACCIA				X			X	X	X	X			X		X	
		FCDOA							X	X	X	X	X		X		X	
		FCDIA				X			X	X	X	X	X		X		X	
	50D	FCDOA							X	X	X	X	X		X		X	
		FCCHA					X		X	X	X	X	X		X		X	
		FCDIA				X			X	X	X	X	X		X		X	
		FCCJA				X	X		X	X	X	X	X		X		X	
	61D	FCCOA / FCYOA							X	X	X	X	X		X		X	
		FCCIA				X			X	X	X	X	X		X		X	
Heat Pump Model	10CR	ACPOB		X										X		X	X	
		ACPIB		X		X								X		X	X	
	15CR	ACPOA		X										X		X	X	
		ACPIA		X		X								X		X	X	
	18CR	ACPOD		X										X		X	X	
		ACPID		X		X								X		X	X	
	20CR	ACPOD		X										X		X	X	
		ACPID		X		X								X		X	X	
	25CR	ACPOD		X										X		X	X	
		ACPID		X		X								X		X	X	
	28CR	ACHOB		X										X		X	X	
		ACHIB		X		X								X		X	X	
	30DR	ACCOA		X	X				X	X		X		X	X		X	
		ACCIA		X	X	X			X	X		X		X	X		X	
		FCCOA		X	X				X	X		X	X	X	X		X	
		FCCIA		X	X	X			X	X		X	X	X	X		X	
	35DR	ACCOA		X	X				X	X				X	X		X	
		ACCIA		X	X	X			X	X				X	X		X	
	40DR	ACCOA		X	X				X	X		X		X	X		X	
		ACCIA		X	X	X			X	X		X		X	X		X	
		FCDOA		X	X				X	X		X	X	X	X		X	
		FCDIA		X	X	X			X	X		X	X	X	X		X	
	50DR	FCDOA		X	X				X	X		X	X	X	X		X	
		FCDIA		X	X	X			X	X		X	X	X	X		X	
	61DR	FCCOA		X					X	X		X	X	X	X		X	
		FCCIA		X		X			X	X		X	X	X	X		X	

Outdoor Unit
A5LC-C SERIES PRODUCT LINE UP

A5LC		Nomenclature	Classification															
			Refrigerant Ctrl + Fin			Special		Safety Devices					Grille	Compressor		Marking	
			Cap. Tube	TXV	Gold Fin	High Ambient Kit	Low Ambient Kit	Contactor	High Pressure Switch	Low Pressure Switch	Nantong Press. SW	Phase Sequencer	Drain Elbow	Copeland Scroll Comp.	Rotary	CE Marking	ETL
Cooling Model	10C	ACPOB	X												X	X	
		ACPIB	X		X										X	X	
	15C	ACPIC	X		X										X	X	
		ACPOC	X												X	X	
	20C	ACPIC	X		X										X	X	
		ACPOC	X												X	X	
		FCPOC	X					X				X			X	X	
	25C	ACPIC	X		X										X	X	
		ACPOC	X												X	X	
		FCPOC	X					X				X			X	X	
	28C	ACPOA	X												X	X	
		ACPIA	X		X										X	X	
		FCPOA	X					X				X			X	X	
	35D	ACCOA	X					X	X	X				X		X	
		ACCIA	X		X			X	X	X				X		X	
		FCCOA	X					X	X	X	X	X		X		X	
		FCCIA	X		X			X	X	X	X	X		X		X	
	40D	ACCOA	X					X	X	X				X		X	
		FCCOA	X					X	X	X	X	X		X		X	
		FCCIA	X		X			X	X	X	X	X		X		X	
		ACCIA	X		X			X	X	X				X		X	
	50D	FCCOA	X					X	X	X		X		X		X	
		FCCIA	X		X			X	X	X		X		X		X	
	61D	FCCOA	X					X	X	X		X		X		X	
		FCCIA	X		X			X	X	X		X		X		X	
Heat Pump Model	10CR	ACPOB	X										X		X	X	
		ACPIB	X		X								X		X	X	
	15CR	ACPOC	X										X		X	X	
		ACPIC	X										X		X	X	
	20CR	ACPIC	X		X								X		X	X	
		ACPOC	X										X		X	X	
		FCPOC	X					X				X	X		X	X	
	25CR	ACPIC	X		X								X		X	X	
		ACPOC	X										X		X	X	
		FCPOC	X					X				X	X		X	X	
	28CR	ACPOA	X										X		X	X	
		ACPIA	X		X								X		X	X	
		FCPOA	X					X				X	X		X	X	
	35DR	ACCOA	X					X	X	X			X	X		X	
		ACCIA	X		X			X	X	X			X	X		X	
		FCCOA	X					X	X	X	X	X	X	X		X	
		FCCIA	X		X			X	X	X		X	X	X		X	
	40DR	ACCOA	X					X	X	X			X	X		X	
		ACCIA	X		X			X	X	X			X	X		X	
		FCCOA	X					X	X	X		X	X	X		X	
		FCCIA	X		X			X	X	X		X	X	X		X	
	50DR	FCCOA	X					X	X	X		X	X	X		X	
		FCCIA	X		X			X	X	X		X	X	X		X	
	61DR	FCCOA	X					X	X	X		X	X	X		X	
		FCCIA	X		X			X	X	X		X	X	X		X	

2. FEATURES

Space Saving, Elegance and Prestige

The unit is installed above the ceiling with only the supply and return air grille exposed to view. This ceiling concealed type of design has made it an “Evergreen” model without sacrificing the precious floor space.

The air-conditioned space will appear as elegant and prestigious as centralized air-conditioned area but with only a fraction of the cost. This model is ideal for small offices, hotel rooms, hospitals and restaurant applications.

Double Proctection Drainage System

High humidity inside the ceiling area is always the main cause of water leaking. By introducing “Built In” double drain pans solution, i.e. primary drain pan and secondary drain pan, water leaking will not be a problem anymore. The high quality Polystyrene (PS) primary drain pan come with a layer of thermal forming High Impact Polystyrene (HIPS) coating.

The primary drain pan is specially designed, with mould in gradient, for better condensate water drainage. Furthermore, the drain pan is made of PS, which is a very good insulation material to prevent sweating. The secondary drain pan will act as a drip pan to block any water that might be dripped down thus offering an additional protection to the ceiling. In such a case, additional drain pan will not be necessary during installation which means more cost saving. A drain socket is supplied to connect both drain pans to the drainage pipe.

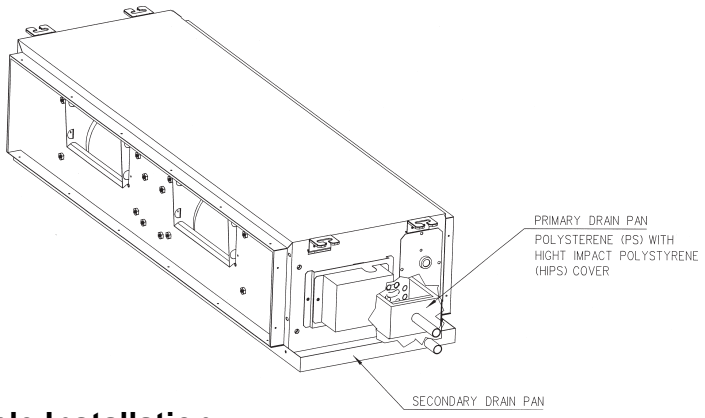

Easy and Flexible Installation

The physical height of the unit is only 261mm / 378mm, it is therefore offering greatest flexibility in selecting installation location.

With its special designed installation accessories, the installation job become easy and better air distribution can be achieved without extra spending on duct works.

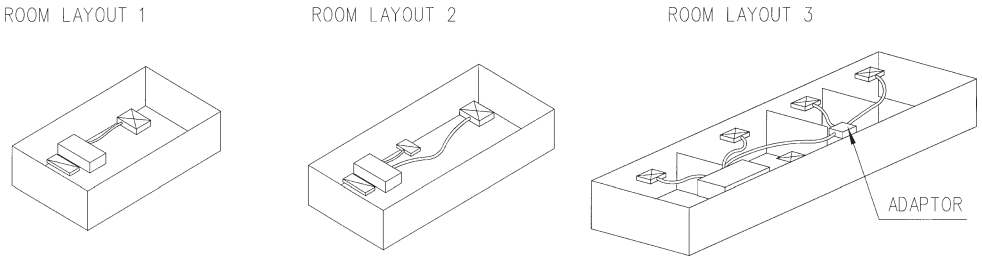

Easy Maintenance

The simple design concept has a friendly maintenance and servicing in mind. Just loosening a few screws, remove secondary drain pan and drain guide, you can access to all the internal parts from the bottom of the unit. No water will splash down when removing the secondary drain pan makes the servicing work never easier before.

Medium Static Pressure with a Low Noise Level

This new series has a static pressure between 0 to 15 mmAq depend on duct work installation. The casing is well insulated internally to reduce the noise level.

3. APPLICATION INFORMATION

Ensure the operating temperature is in allowable range.

Cooling only

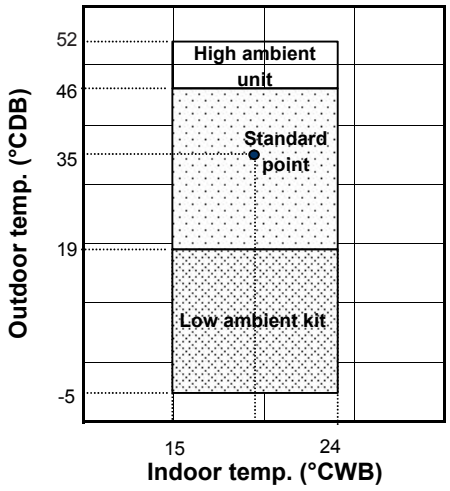

⚠ Caution :

The use of your air conditioner outside the range of working temperature and humidity can result in serious failure.

Heat pump

Heating

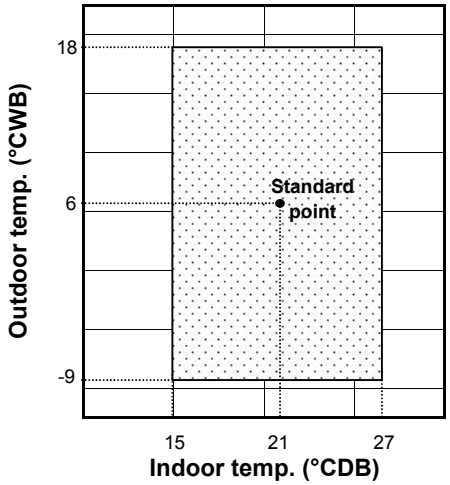

Cooling

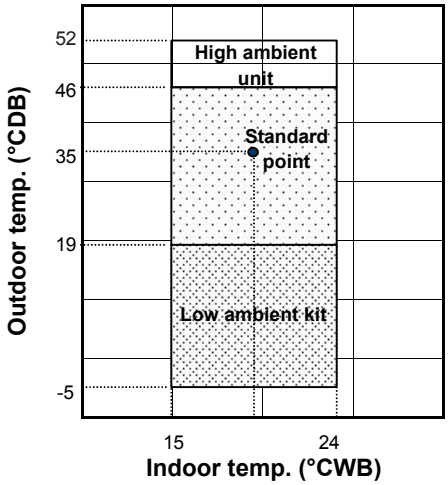

Note :

Standard operating range.

With High ambient unit. (Optional item)
Please refer to local dealer for unit of this specification.

With Low ambient kit. (Optional item)
Please refer to local dealer for unit of this specification.

Refrigerant Circuit Diagrams

Model: ACC 10 / 15C - ALC 10 / 15C
ACC 20C - ALC 18 / 20C
A5CC 25C - A5LC 25C

A5CC 10 / 15C - A5LC 10 /15C
A5CC 20C - A5LC 20C

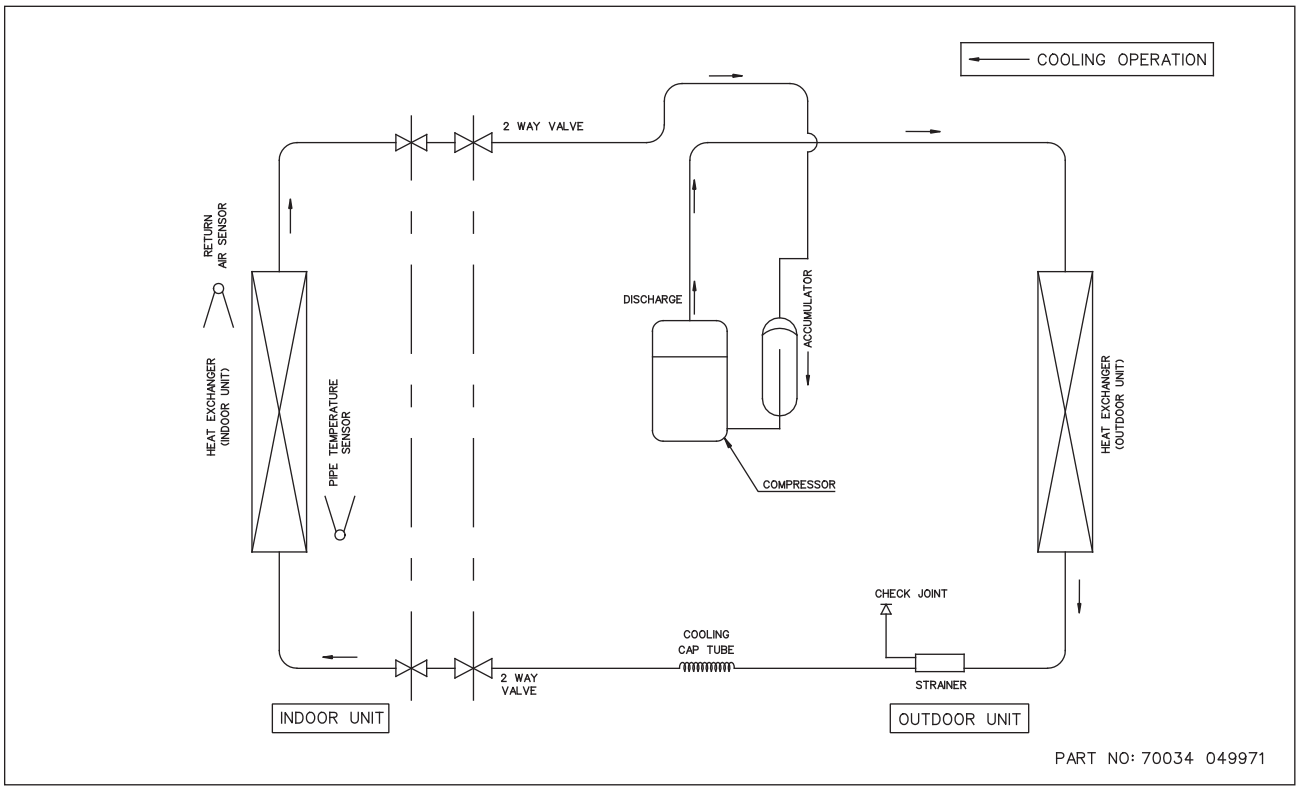

Model : ACC 25C - ALC 25C
A5CC 28C - A5LC 28C

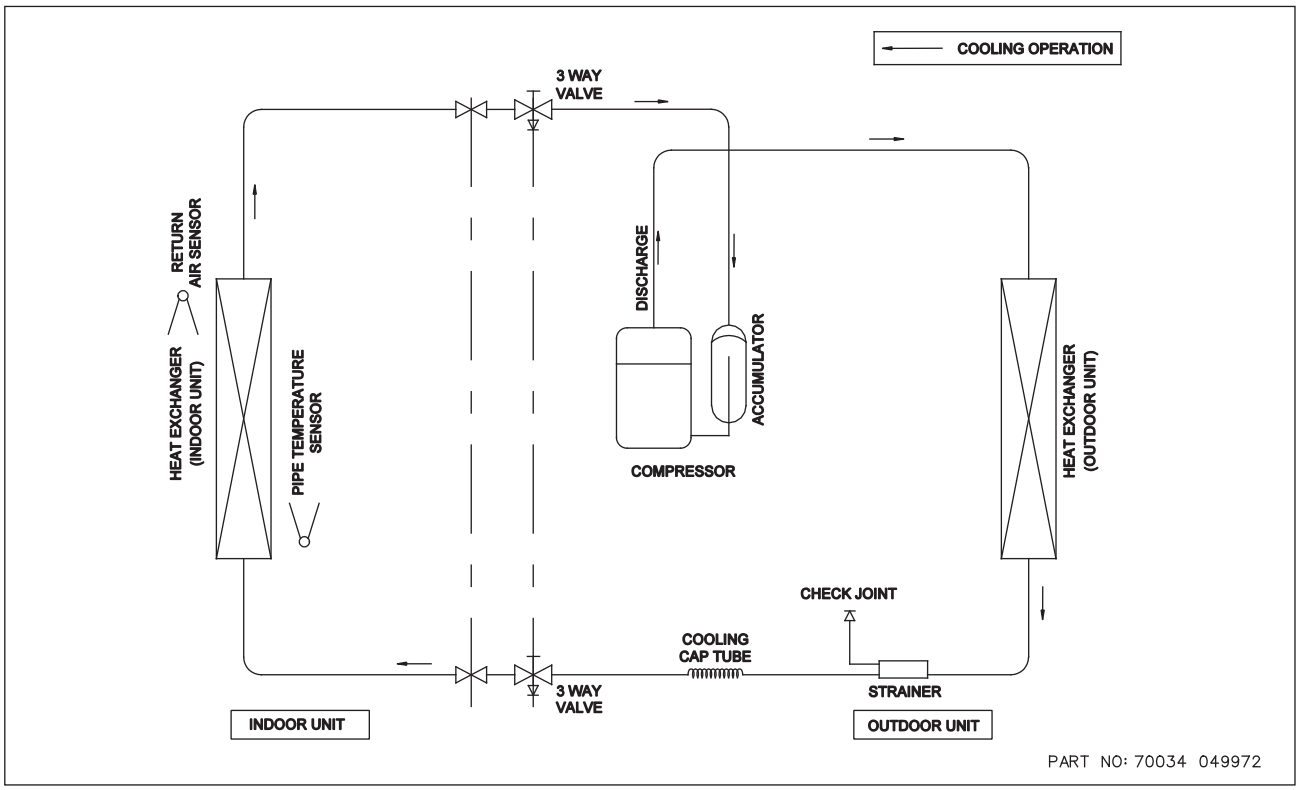

Model : ACC 28C - A LC 28C
ACC 30C - ALC 28C

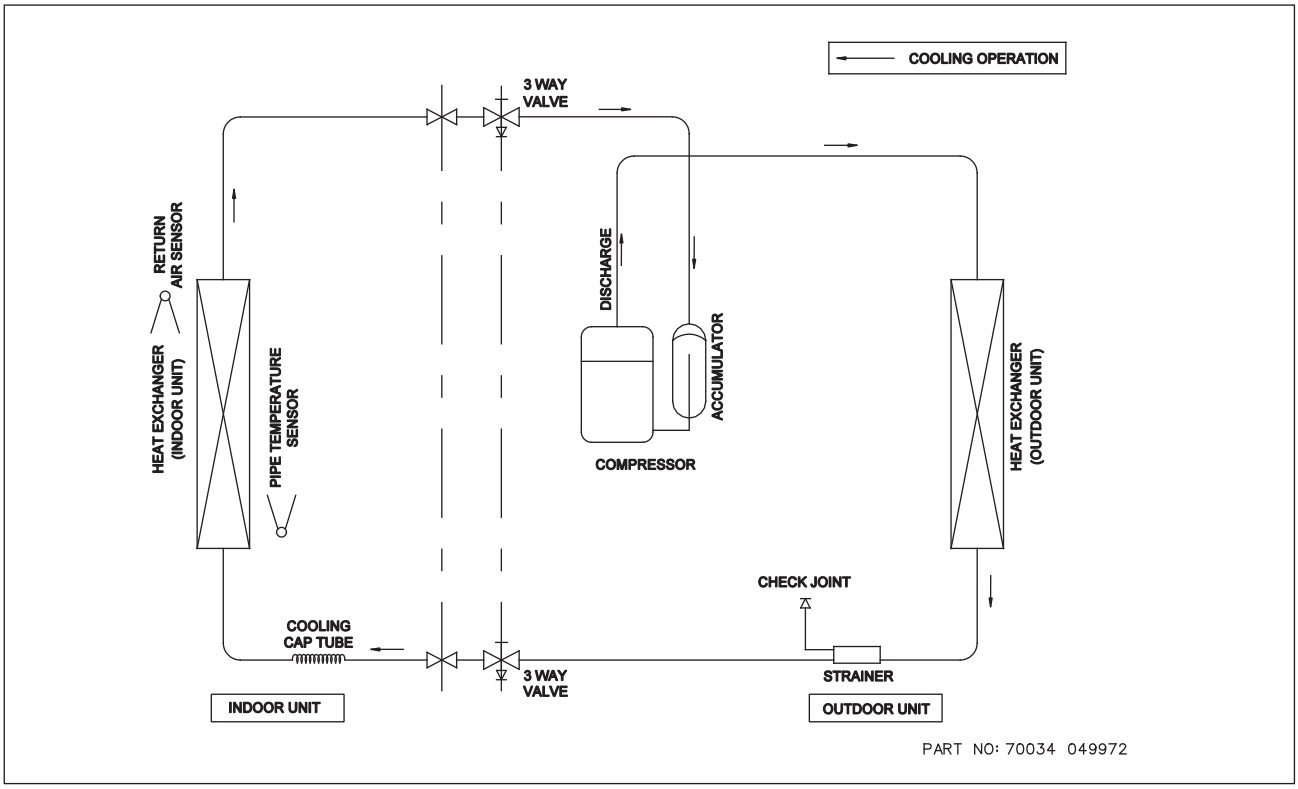

Model : ACC 28C - ALC ~~30C~~ 30D **ACC 50C - ALC ~~50C~~ 50D**
ACC 60C - ALC ~~61C~~ 61D **ACC 38 / 40C - ALC ~~35 / 40C~~ 35 / 40D**

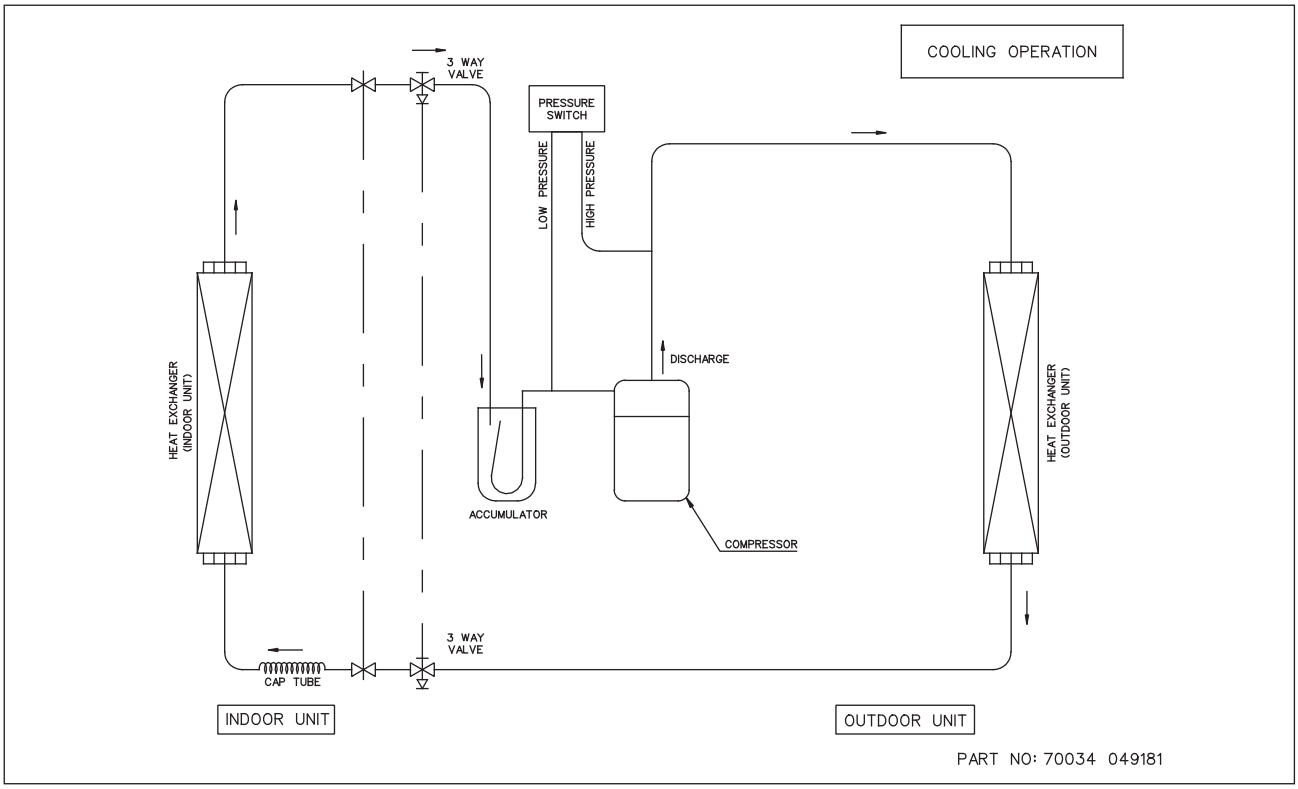

Model : A5CC 38C - A5LC ~~35C~~ 35D A5CC 50C - A5LC ~~50C~~ 50D
A5CC 40C - A5LC ~~40C~~ 40D A5CC 60C - A5LC ~~61C~~ 61D

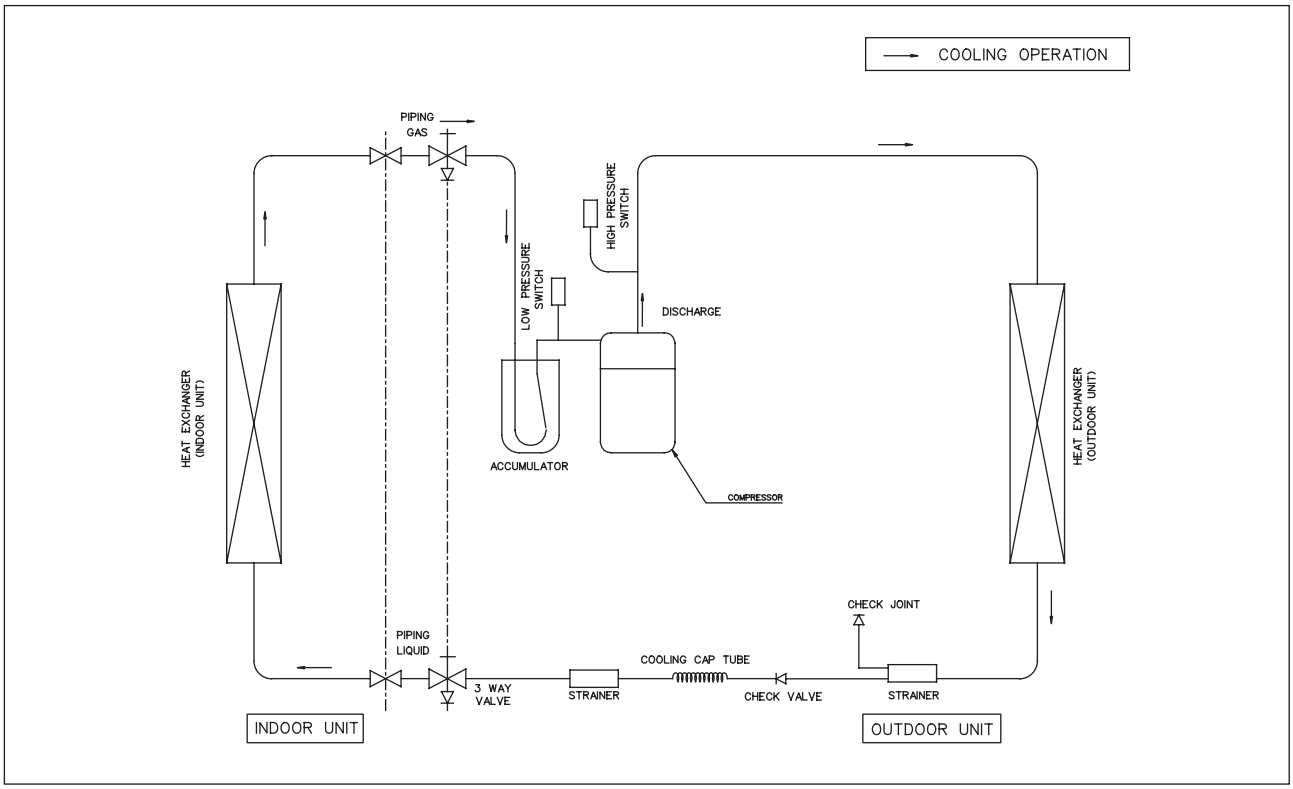

Model : ACC / A5CC 10CR - ALC / A5LC 10CR

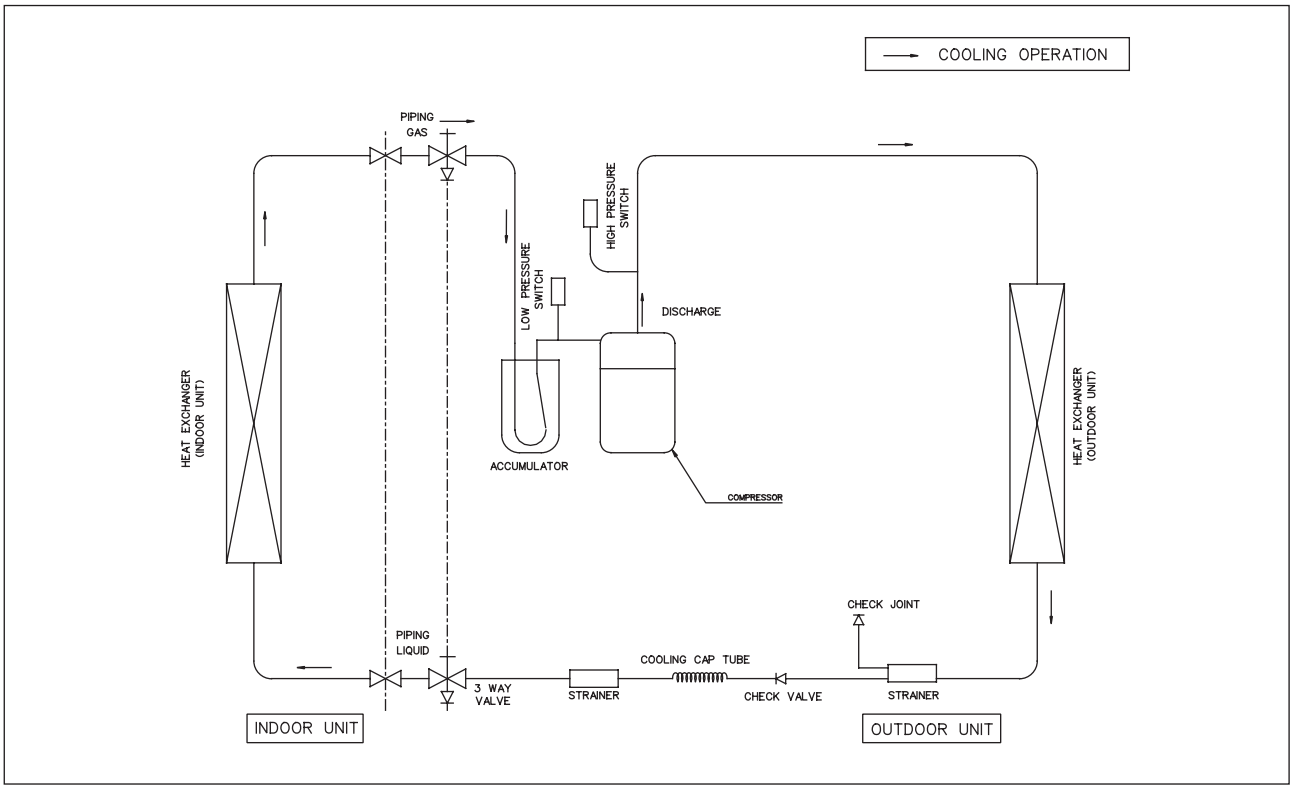

Model : ACC / A5CC 15CR - ALC / A5LC 15CR

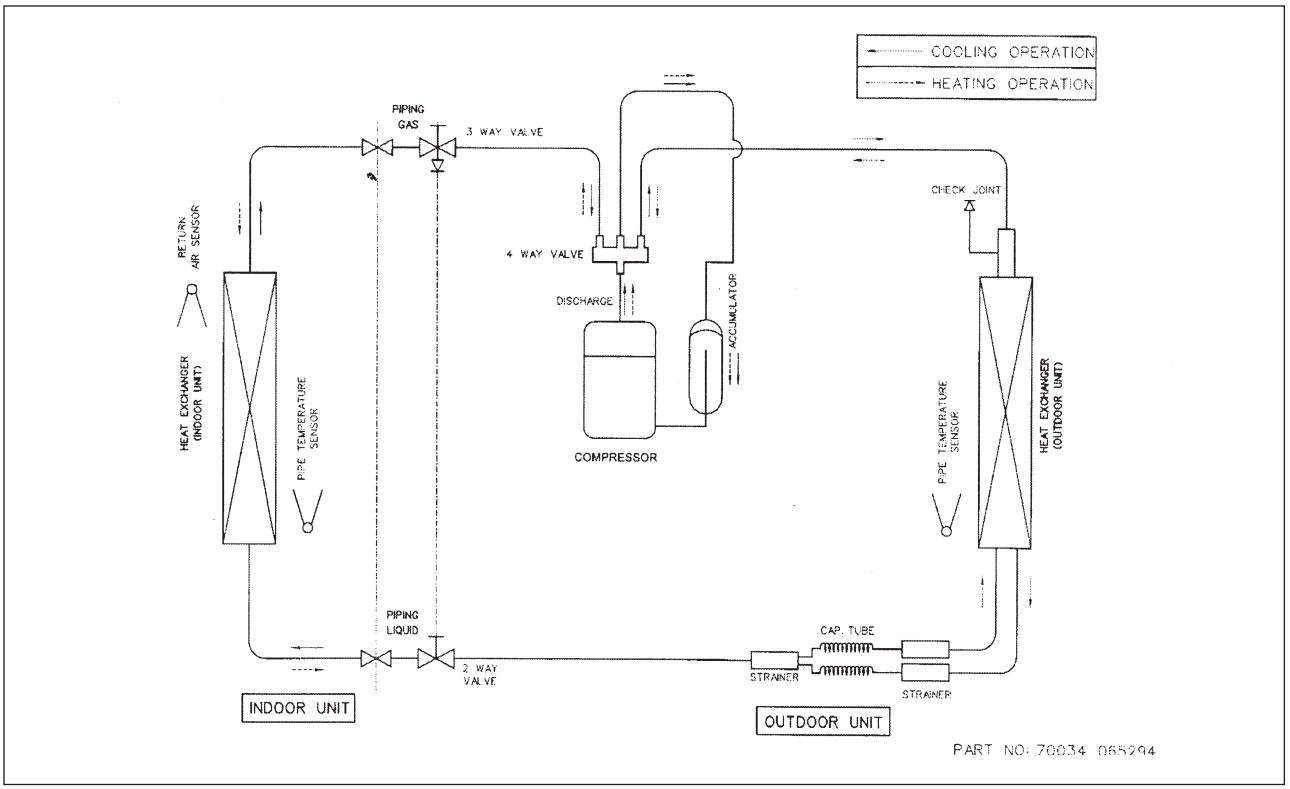

Model : ACC 20CR - ALC ~~18 /~~ 20CR
A5CC 20CR - A5LC 25CR
A5CC 25CR - A5LC 25CR

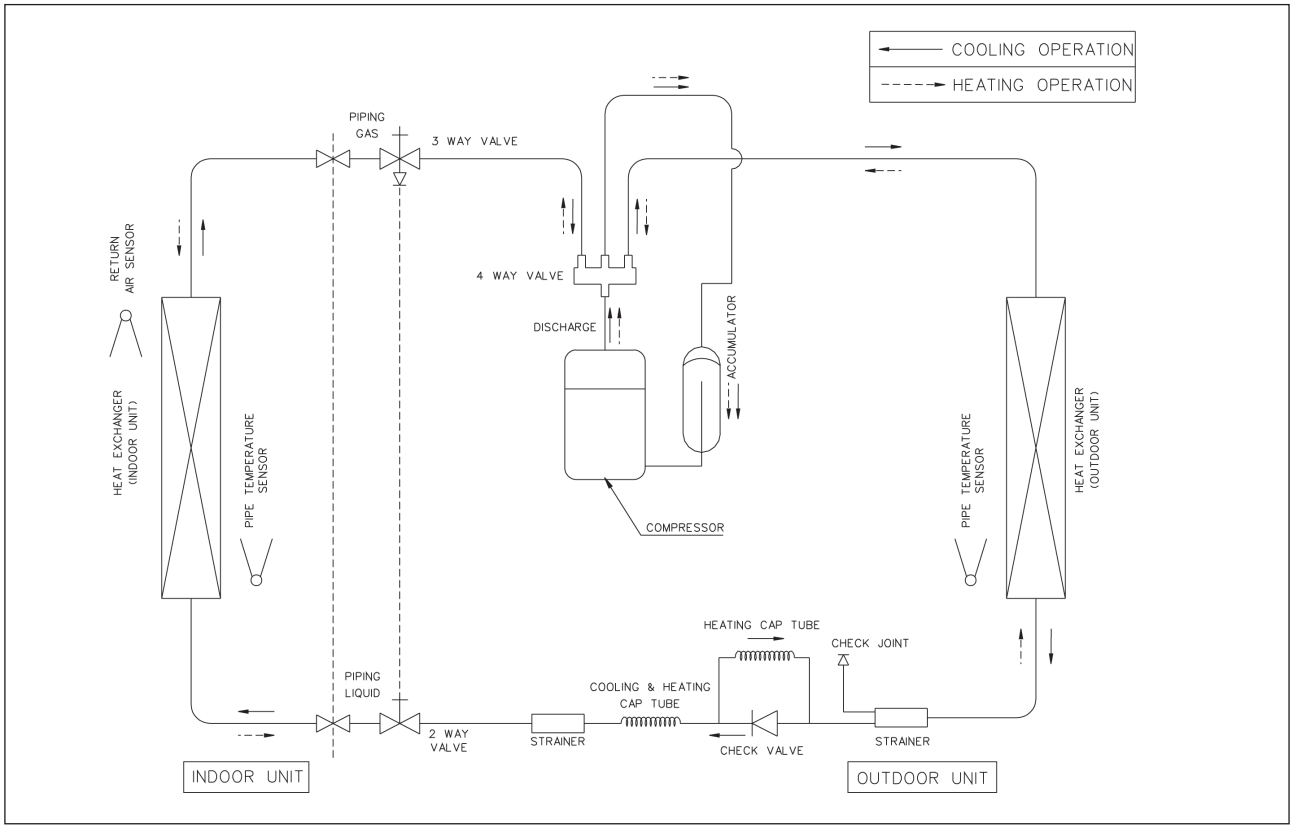

Model : ACC 25CR - ALC 25CR
ACC 28 / 30CR - ALC 28CR

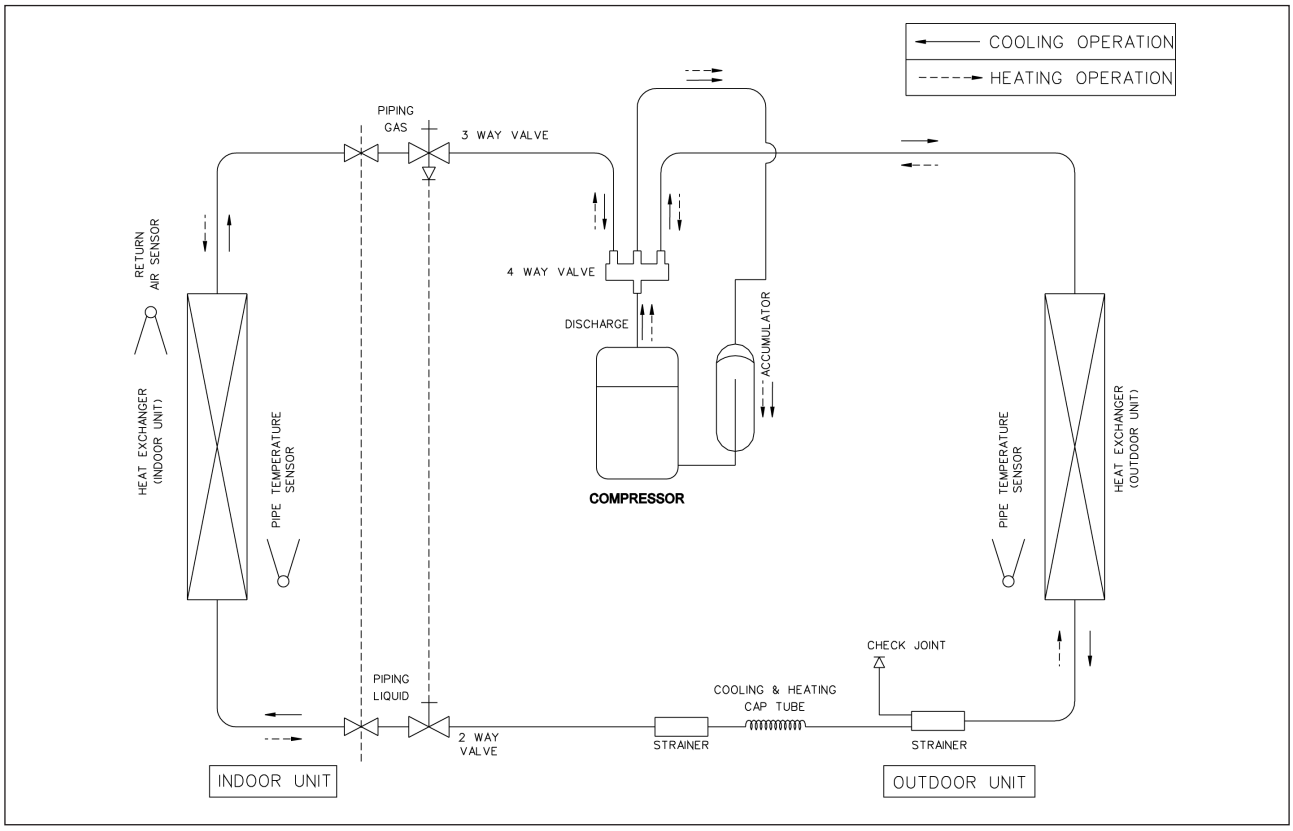

Model : A5CC 28CR - A5LC 28CR

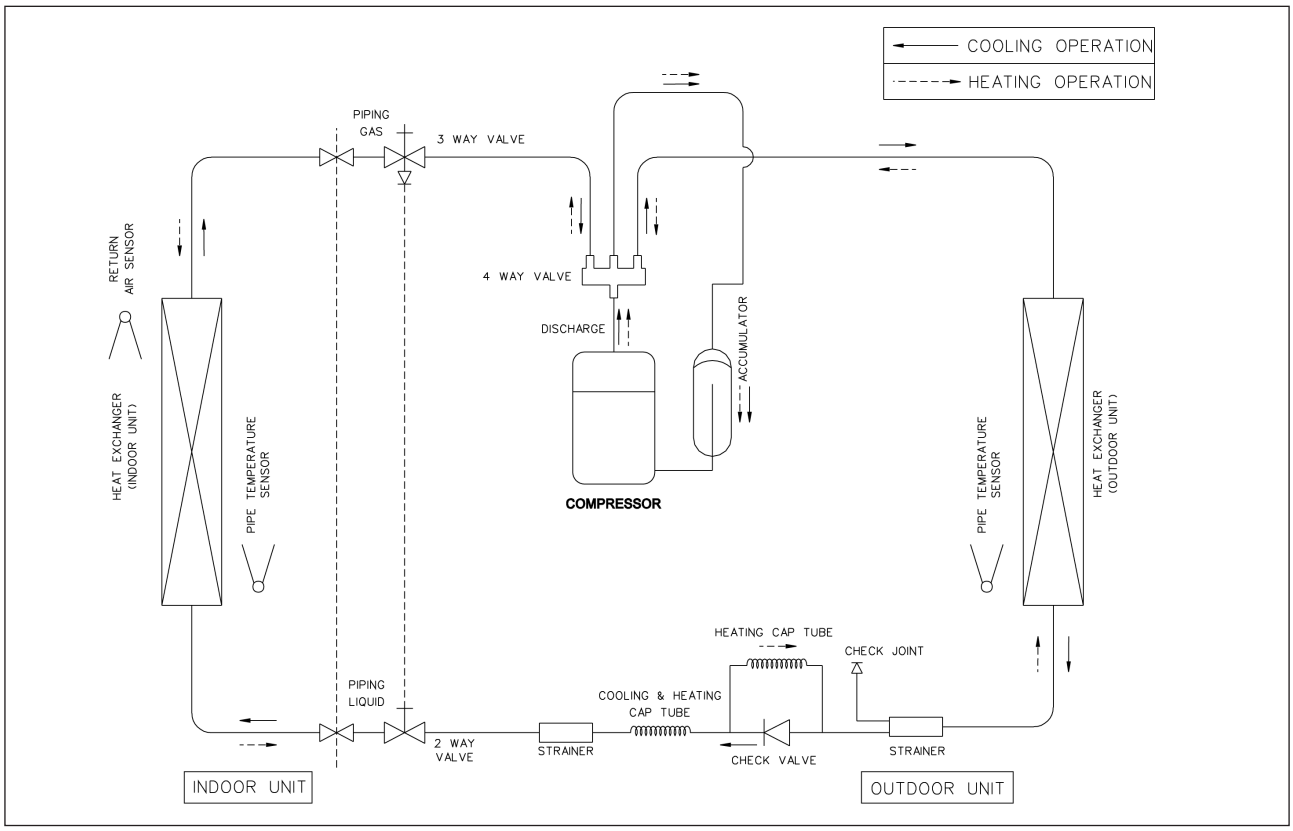

Model : ACC 28 / 30CR - ALC ~~30CR~~ 30DR ACC 50CR - ALC ~~50CR~~ 50DR
ACC 38 / 40CR - ALC ~~35 / 40CR~~ 35 / 40DR

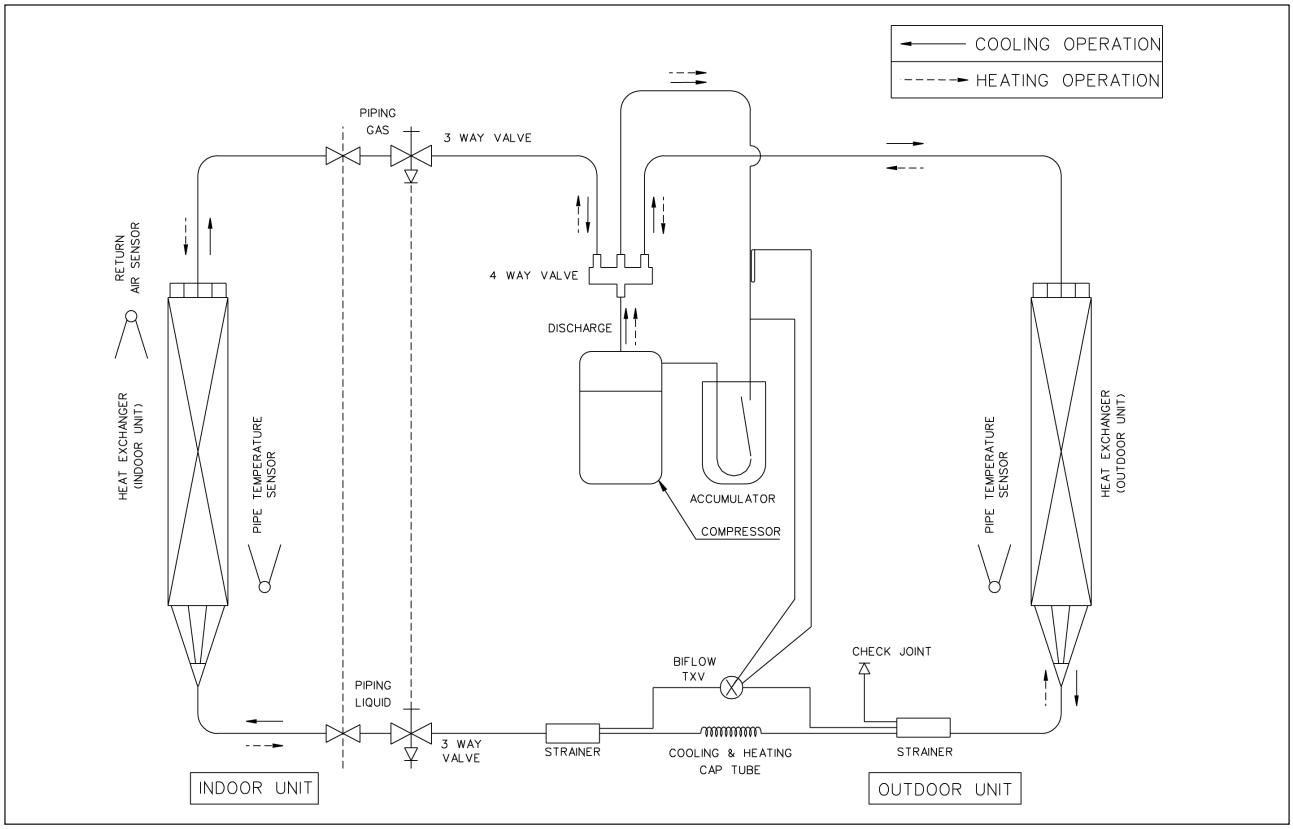

Model : ACC 60CR - ALC ~~61CR~~ 61DR

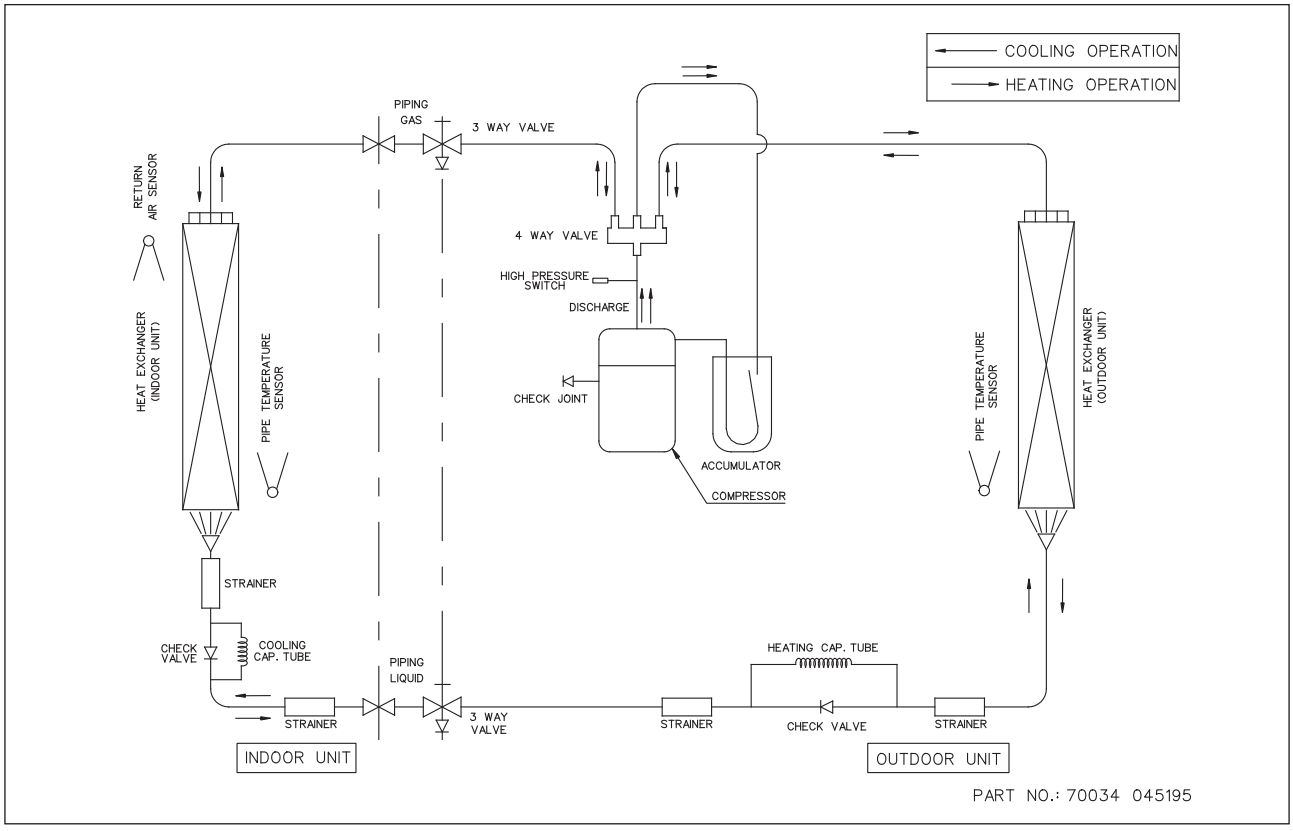

Model : A5CC 28CR - A5LC ~~35CR~~ 35DR
A5CC 38CR - A5LC ~~40CR~~ 40DR
A5CC 50CR - A5LC ~~50CR~~ 50DR
A5CC 60CR - A5LC ~~61CR~~ 61DR

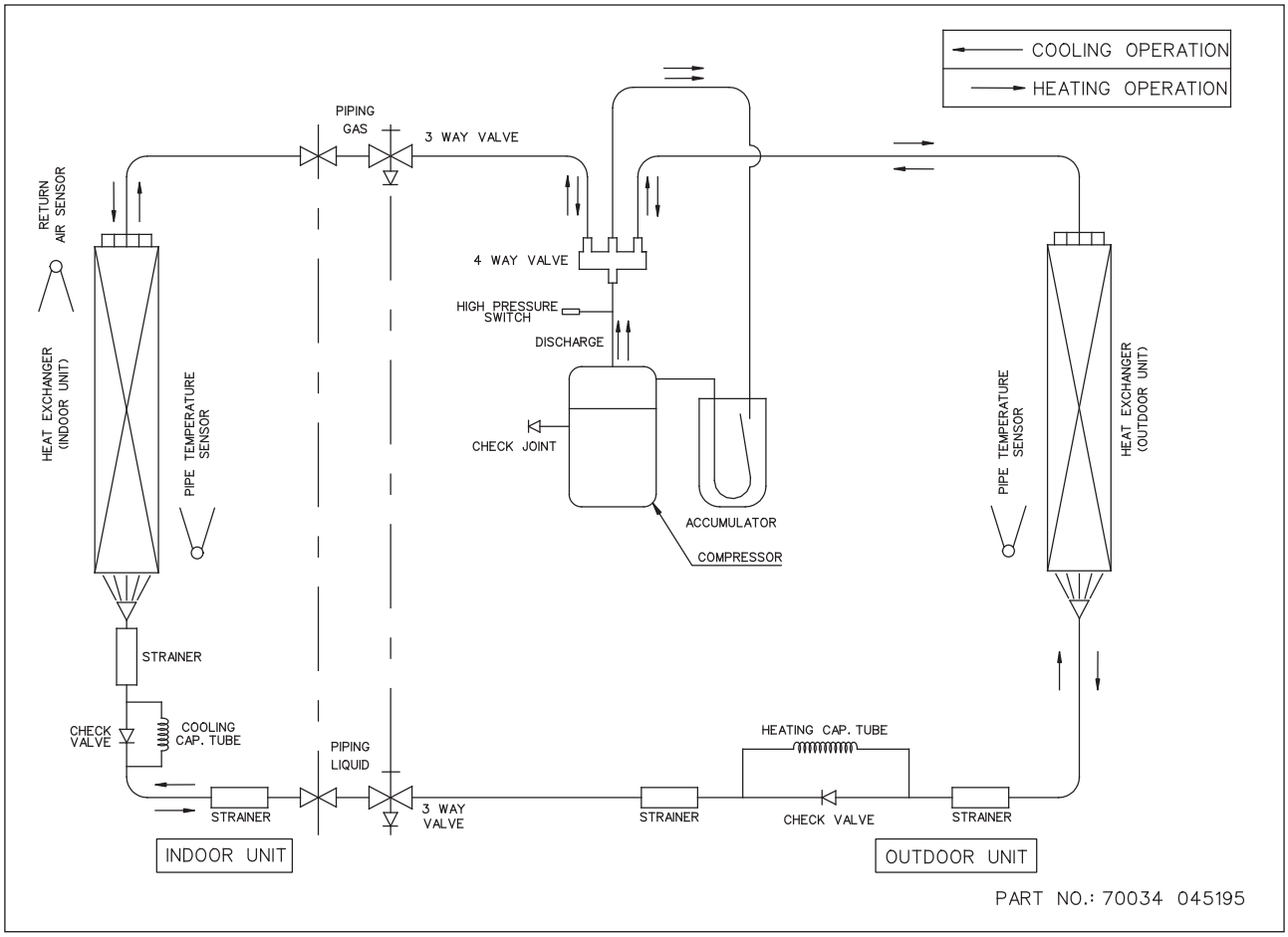

Controllers

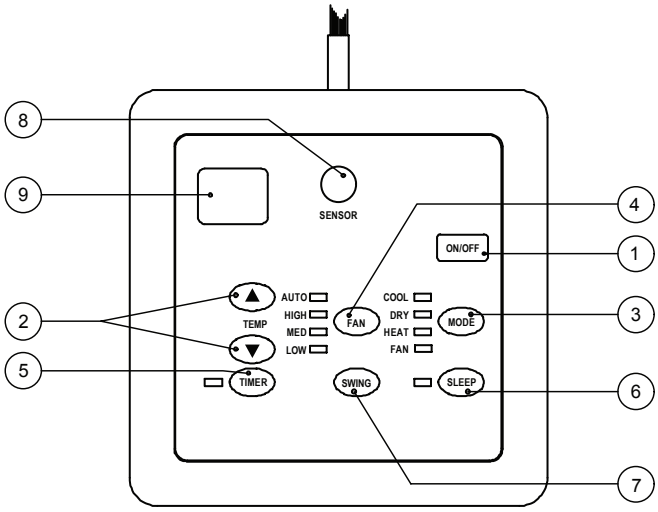

SLM

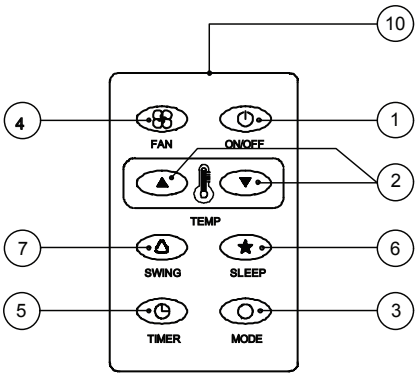

AC-5300 (Optional)

1. "ON/OFF" switch
- Press to start the air conditioner unit.
- Press again to stop the unit.

2. Temperature setting
- Set the desired room temperature.
- Press button to increase or decrease the set temperature. Setting range are between 16°C to 30°C (60°F to 80°F).

3. Operation Modes
- Press the "mode" button for select the type of operating mode.

- Cooling Only :
  COOL, DRY, FAN
- Heat Pump :
  AUTO, COOL, DRY, HEAT, FAN
  (AUTO mode is represented by both COOL and HEAT LED light on)

4. Fan Speed selection.
- Press the button until the desired fan speed is achieved.

5. Timer.
- Press the set button to select the switch timer of the air conditioner unit (the setting range is between 1 to 10 hours).

6. "Sleep mode"
- Press button to activate the sleep function
  This function can only be activated under "cool" or heating mode operation. When it is activated under "cool" mode operation, the set temperature will increase 0.5°C after 30 minutes, 1°C after 1 hour and 2°C after 2 hours
  If it is activated under "HEAT" mode operation, the set temperature will be decreased 0.5°C after 30 minutes, 1°C after 1 hour and 2°C after 2 hours.

7. Air Swing
- Press button to activate the automatic air swing function.

8. Sensor
- Infra red sensor to receive signals from wireless controller.

9. LED Display
- To display the set temperature (in °C) and timer delay setting (in hours).

10. Transmission source
- To transmit signals to the air conditioner.

Operating State and Fault Table

Cooling / Heatpump Model (Universal Board)

Error Code at 7 Segment Display	Operation / Faulty Indication
Blink E1	Room sensor contact loose / short
Blink E2	Indoor coil sensor contact loose
Blink E3	Outdoor coil sensor contact loose
Blink E4	Compressor overload / Indoor coil sensor short / Outdoor coil sensor short
Blink E5	Gas leak
Blink E6	N/A
Blink Heat LED	Outdoor defrost (for Heatpump only)

Phase Sequencer

The unit with Scroll Compressor can only rotate in one direction. For this reason, a protective device (phase sequencer) is fitted to prevent incorrect wiring of the electrical phases. When the three phases are not connected correctly, the phase sequencer operates, and the unit will not start. This devise is located in the control box of the outdoor unit.

The following table shows the LED indicator light for phase sequencer under normal operation and fault conditions.

	LED_P (Red)	LED_R (Yellow)	LED_S (Yellow)	LED_T (Yellow)
Normal Operation	On	-	-	-
Reverse Phase	Blink	Blink	Blink	Blink
S & T Phase Missing	Blink	-	Blink	Blink
T Phase Missing	Blink	-	-	Blink
S Phase Missing	Blink	-	Blink	-
R Phase Missing	-	-	-	-
Overload	Blink	-	-	-
Sensor Missing	Blink	On	On	On

Notes: 1. "-" means LED off.
2. When R phase missing, no LED or buzzer will indicate the error, but relay 71 (Common) and 81 (NO) will cut off.
3. The unit will check the discharge sensor availability only during power up.
*4. All errors can only recover through **manually reset**.*

Caution

Sharp edges and coil surfaces are potential injury hazard. Avoid from contact with them.

(1) Installation of Indoor Unit

Preliminary Survey

- Electrical supply and installation is to confirm to local authority's (e.g. National Electrical Board) codes and regulations.
- Voltage supply fluctuation must not exceed ± 10% of rated voltage. Electricity supply lines must be independent of welding transformers which can cause high supply fluctuation.
- Ensure that the location is convenient for wiring, piping and drainage.
- The indoor unit must be installed in such that free from any obstacles in path of cool air discharge and warm air return, and must allow spreading or air throughout the room (near the centre of the room).
- Clearance must be provided for the indoor unit from the wall and obstacles as shown in the figure.
- Use the hanger supplied with the unit.
- Ensure the support is strong enough to withstand the weight of the unit.
- Use the supplied drain socket to connect the drain pipe (the drain socket is only available for 10C/CR to 25C/CR)

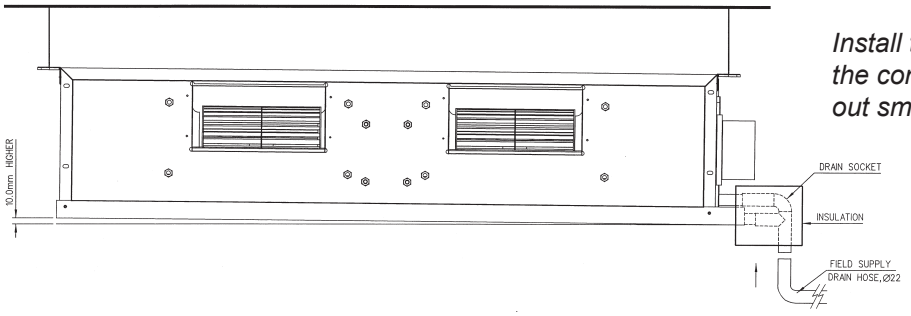

Install the unit in such a way that the condensate water can flow out smoothly.

The diagrams below show the screws position for duct work connection.

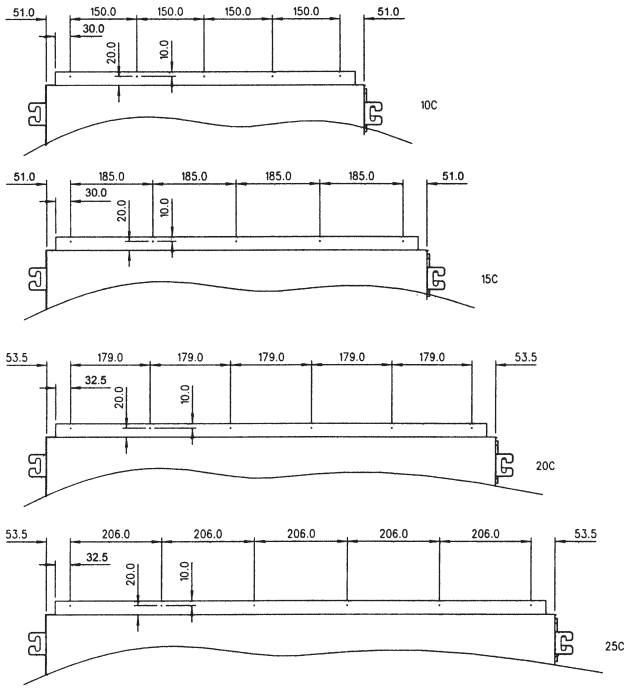

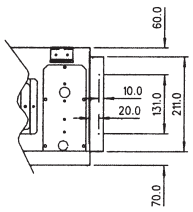

(2) Installation of Outdoor Unit

As condensing temperature rises, evaporating temperature rises and cooling capacity drops. In order to achieve maximum cooling capacity, the location selected for outdoor unit should fulfill the following requirements:

- Install the condensing (outdoor) unit in a way such that hot air distributed by the outdoor condensing unit cannot be drawn in again (as in the case of short circuit of hot discharge air). Allow sufficient space for maintenance around the unit.

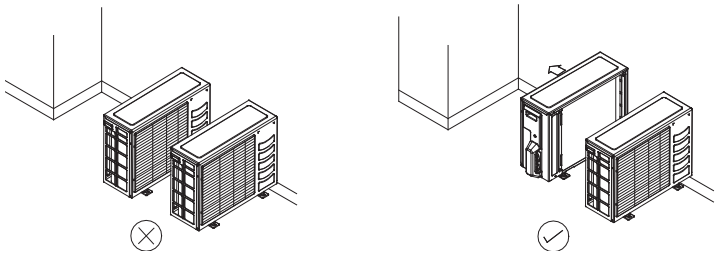

- Ensure that there is no obstruction of air flow into or out of the unit. Remove obstacles which block air intake or discharge.
- The location must be well ventilated, so that the unit can draw in and distribute plenty of air thus lowering the condensing temperature.

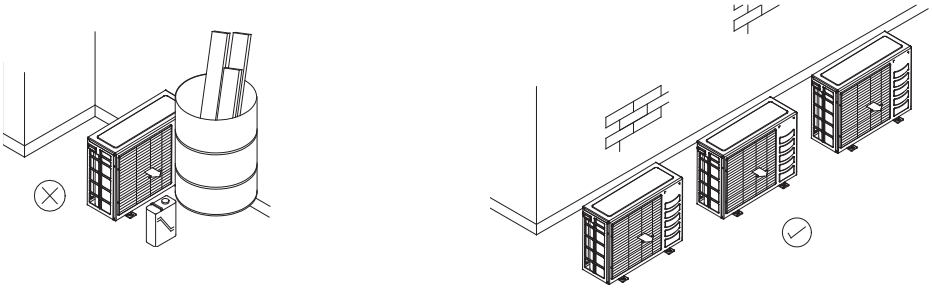

- A place capable of bearing the weight of the outdoor unit and isolating noise and vibration.
- A place protected from direct sunlight. Otherwise use an awning for protection, if necessary.

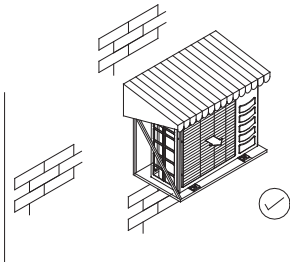

- The location must not be susceptible to dust or oil mist.

Installation Clearance

- Outdoor units must be installed such that there is no short circuit of the hot discharge air or obstruction to smooth air flow. Select the coolest possible place where intake air should not be hotter than the outside temperature) (max. 45˚C)

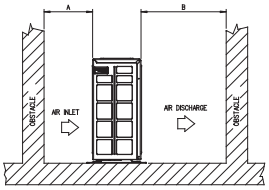

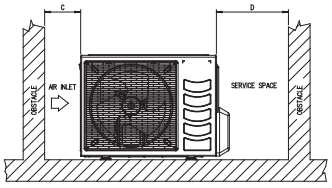

All Model	A	B	C	D
Minimum Distance	300 mm	1000 mm	300 mm	500 mm

CAUTION : If the condensing unit is operated in an atmosphere containing oils (including machine oils), salt (coastal area), sulphide gas (near hot spring, oil refinery plant), such substances may lead to failure of the unit.

(3) Refrigerant Piping

Maximum Pipe and Maximum Number of Bends

- When the pipe length becomes too long, both the capacity and reliability drop. As the number of bends increases, system piping resistance to the refrigerant flow increases, thus lowering the cooling capacity, and as the result the font compressor may become defective. Always choose the shortest path and follow the recommendation as tabulated below:

Model							
	Indoor	10 / 15C/CR	20 / 25C/CR	28 / 30C/CR		38 / 40 / 50C/CR (35 / 40 / 50D/DR)	60C/CR (61D/DR ~~61C/CR~~)
	Outdoor	10 / 15C/CR	20 / 25C/CR	28C/CR	30D/DR ~~30C/CR~~	~~35 / 40 / 50C/CR~~	
Maximum Length, m		15	15	15	45	45	35
Maximum Elevation, m		8	8	8	25	25	25
Maximum No. of Bends		10	10	10	10	10	10

Piping Sizes (Flare connection type)

Piping sizes are as follows:

R22

Model	ALC 10C/CR	ALC 15C/CR	ALC ~~18/20C/CR~~ (18C/ 20C/CR)	ALC 25C/CR
Liquid (mm/in)	6.35 / 1/4	6.35 / 1/4	6.35 / 1/4	9.52 / 3/8
Suction (mm/in)	9.52 / 3/8	12.70 / 1/2	15.88 / 5/8	15.88 / 5/8

Model	ALC 28C/CR / 30D/DR ~~ALC 28 / 30C/CR~~	35 / 40D/DR ALC ~~35 / 40C/CR~~	50D/DR ALC ~~50C/CR~~	61D/DR ALC ~~61C/CR~~
Liquid (mm/in)	9.52 / 3/8	9.52 / 3/8	9.52 / 3/8	12.70 / 1/2
Suction (mm/in)	15.88 / 5/8	19.05 / 3/4	19.05 / 3/4	19.05 / 3/4

R410A

Model	A5LC 10C/CR	A5LC 15C/CR	A5LC 20C/CR	A5LC 25C/CR
Liquid (mm/in)	6.35 / 1/4	6.35 / 1/4	6.35 / 1/4	6.35 / 1/4
Suction (mm/in)	9.52 / 3/8	12.70 / 1/2	12.70 / 1/2	15.88 / 5/8

Model	A5LC 28C/CR / 35D/DR ~~A5LC 28 / 35C/CR~~	40D/DR A5LC ~~40C/CR~~	50D/DR A5LC ~~50C/CR~~	61D/DR A5LC ~~61C/CR~~
Liquid (mm/in)	9.52 / 3/8	9.52 / 3/8	9.52 / 3/8	9.52 / 3/8
Suction (mm/in)	15.88 / 5/8	15.88 / 5/8	15.88 / 5/8	19.05 / 3/4

Piping Connection to The Units

- Align the centre of the piping and tighten the flare nut sufficiently with fingers.
- Finally tighten the flare nut with torque wrench unit the wrench clicks.
- When tightening the flare nut with torque wrench, ensure the direction for tightening follows the arrow on the wrench.

Pipe Size (mm/in)	Torque (Nm)
6.35 (1/4)	18
9.52 (3/8)	42
12.70 (1/2)	55
15.88 (5/8)	65
19.05 (3/4)	78

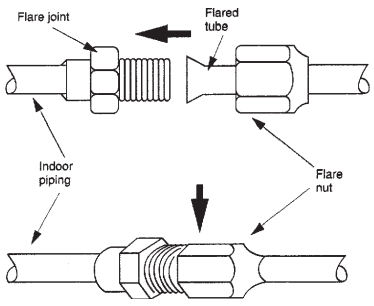

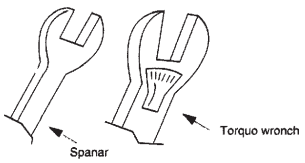

4) Wiring

ELECTRICAL CONNECTIONS

- Wiring regulations on wire diameters differ from country to country. Please refer to your LOCAL ELECTRICAL CODES for field wiring rules. Be sure that installations comply with the rules and regulations.

GENERAL PRECAUTIONS

- Ensure that the rated voltage of the unit corresponds to the name plate before carrying out proper wiring according to the wiring diagram.
- Provide a power outlet to be used exclusively for each unit. A power supply disconnects and a circuit breaker for over-current protection should be provided in the exclusive line.
- The unit must be **GROUNDED** to prevent possible hazards due to insulation failures.
- All wiring must be firmly connected.
- All wiring must not touch the hot refrigerant piping, compressor or any moving parts of fan motors.

(5) Vacuuming and Charging

The pre-charged outdoor unit does not need any vacuuming or charging. However once it is connected, the connecting pipe line and the indoor unit need to be vacuumed before releasing the R22/R407C/R410A from the outdoor unit.

1. Open the service port core cap.
2. Connect pressure gauge to the service port.
3. Connect the line to vacuum pump. Open the charging manifold valve and turn the pump on. Vacuum to -0.1 MPa (-760mmHg) or lower. (Evacuation time varies by the pump but averagely in 1 hour).

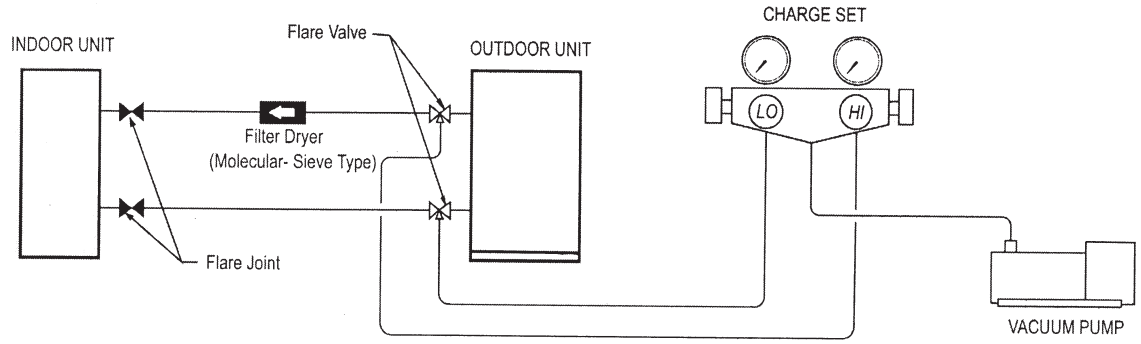

Note : R407C - Fix filter dryer
R22 - Nil
R410A - Nil

4. After evacuation, unscrew the spindle (diagram B) for the gas to run to indoor unit.

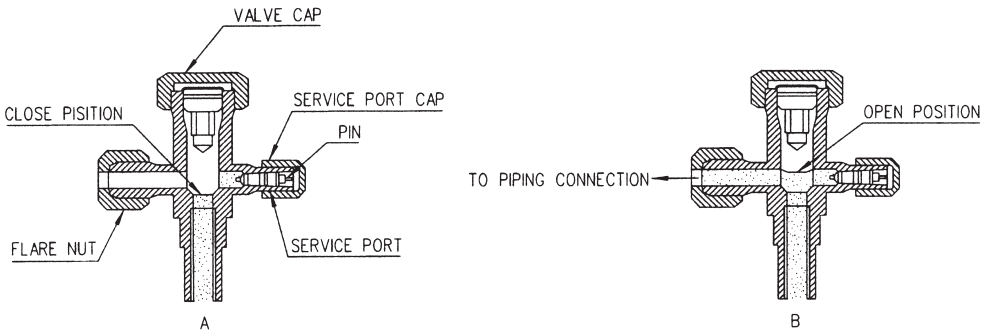

CAUTION FOR R407C / R410A

Avoid prolong exposure of an opened compressor, or the internal part of refrigerant piping to moist air. The POE oil in the compressor and piping can absorb moisture from air.

(6) Additional Charge

- The refrigerant charge has already charged into the outdoor unit. For the piping length of 7.6m, additional refrigerant charge after vacuuming is not necessary.
- When the piping length is more than 7.6m, please use the table below (unit in gram).

R22

Model	10m	12m	15m	25m	35m	45m
10C/CR	38 / 54	69 / 99	-	-	-	-
15C/CR	37 / 55	69 / 100	-	-	-	-
18C~~/CR~~	38 / 54	69 / 98	116 / 166	-	-	-
20C/CR	37 / 54	69 / 98	115 / 165	-	-	-
25C/CR	93 / 134	171 / 245	287 / 412	-	-	-
28C/CR	94 / 133	172 / 244	289 / 411	-	-	-
30D/DR ~~30C/CR~~	133 / 133	244 / 243	410 / 409	964 / 961	1518 / 1514	2072 / 2067
35D/DR ~~35C/CR~~	129 / 134	237 / 246	399 / 413	938 / 972	1476 / 1530	2015 / 2088
40D/DR ~~40C/CR~~	133 / 134	244 / 246	410 / 413	964 / 972	1518 / 1530	2072 / 2088
50D/DR ~~50C/CR~~	130 / 135	238 / 248	400 / 417	941 / 980	1482 / 1543	2022 / 2106
61D/DR ~~61C/CR~~	245 / 255	448 / 468	754 / 786	1773 / 1849	2791 / 2912	-

R410A

Model	10m	12m	15m	25m	35m	45m
10C/CR	23 / 38	43 / 70	-	-	-	-
15C/CR	20 / 40	37 / 74	-	-	-	-
20C/CR	25 / 37	45 / 68	76 / 115	-	-	-
25C/CR	63 / 88	115 / 161	193 / 270	-	-	-
28C/CR	98 / 98	180 / 180	303 / 303	-	-	-
40D/DR ~~40C/CR~~	61 / 97	112 / 178	189 / 299	445 / 703	700 / 1107	956 / 1511
50D/DR ~~50C/CR~~	50 / 87	92 / 157	155 / 267	363 / 628	572 / 989	781 / 1350
61D/DR ~~61C/CR~~	94 / 163	173 / 298	290 / 502	682 / 1179	1075 / 1857	-

The additional refrigerant charge amount recommended is a guideline for longer piping application. The actual charge required may be different from the guideline due to different application and variation in site conditions.

Diagram shows typical charging method:

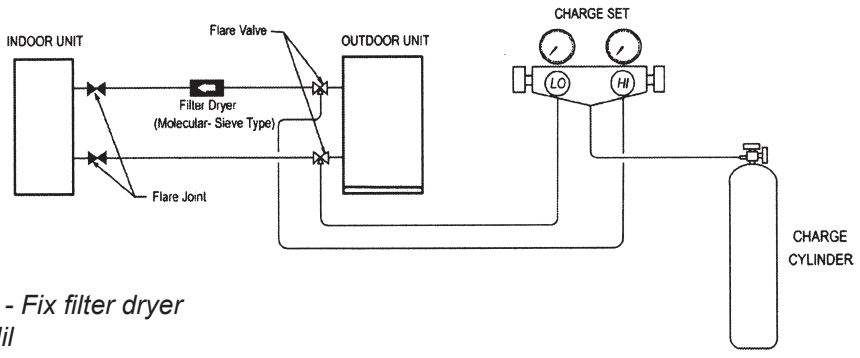

Note : R407C - Fix filter dryer
R22 - Nil
R410A - Nil

CAUTION FOR R407C / R410A

Avoid prolong exposure of an opened compressor, or the internal part of refrigerant piping to moist air. The POE oil in the compressor and piping can absorb moisture from air.

Special Precautions when Dealing with Refrigerant R410A Unit

1) What is new Refrigerant R410A?

R410A is a new HFC refrigerant which does not damage the ozone layer. The working pressure of this new refrigerant is 1.6 times higher than conventional refrigerant (R22), thus proper installation / servicing is essential.

2) Components

Mixture of composition by weight : R32(50%) and R125(50%).

3) Characteristic

- R410A liquid and vapor components have different compositions when the fluid evaporates or condenses. Hence, when leak occurs and only vapor leaks out, the composition of the refrigerant mixture left in the system will change and subsequently affect the system performance. **DO NOT** add new refrigerant to leaked system. It is recommended that the system be evacuated thoroughly before recharging with R410A.
- When refrigerant R410A is used, the composition will differ depending on whether it is in gaseous or liquid phase.
  Hence when charging R410A, ensure that only liquid is being withdrawn from the cylinder or can. This is to make certain that only original composition of R410A is being charged into the system.
- POE oil is used as lubricant for R410A compressor, which is different from the mineral oil used for R22 compressor.
  Extra precaution must be taken to avoid exposing the R410A system to moist air.

4) Check List Before Installation / Servicing

- Tubing
  Refrigerant R410A is more easily affected by dust or moisture compared with R22, make sure to temporarily cover the ends of the tubing prior to installation
- Compressor oil
  No additional charge of compressor oil is permitted.
- Refrigerant
  No other refrigerant other that R410A
- Tools (size of service port is different from R22 system)
  Tools specifically for R410A only (must not be used for R22 or other refrigerant)
  i) Gauge manifold and charging hose
  ii) Gas leak detector
  iii) Refrigerant cylinder/charging cylinder
  iv) Vacuum pump c/w adapter
  v) Flare tools
  vi) Refrigerant recovery machine

5) Handling and Installation Guidelines

Like R22 systems, the handling and installation of R410A system are closely similar. All precautionary measures; such as ensuring no moisture, no dirt or chips in the system, clean brazing using nitrogen, and thorough leak check and vacuuming are equally important requirements. However, due to its hydroscopic POE oil, additional precautions must be taken to ensure optimum and trouble-free system operation.

a) During installation or servicing, avoid prolong exposure of the internal part of the refrigerant system to moist air. Residual POE oil in the piping and components can absorb moisture from the air.

b) Ensure that the compressor is not expose to open air for more than the recommended time specified by its manufacturer (typically less than 10 minutes). Removed the seal-plugs only when the compressor is about to be brazed.

c) The system should be thoroughly vacuumed to 1.0 Pa (700mmHg) or lower. This vacuuming level is more stringent than R22 system so as to ensure no incompressible gas and moisture in the system.

d) When charging R410A, ensure that only liquid is being withdrawn from the cylinder or can. This is to ensure that only the original composition of R410A is being delivered into the system. The liquid composition can be different from the vapor composition.

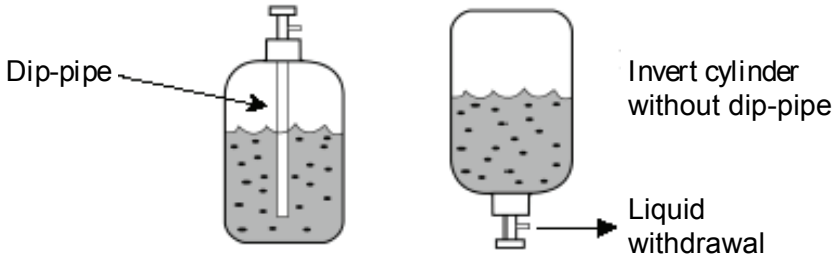

e) Normally, the R410A cylinder or can is being equipped with a dip-pipe for liquid withdrawal. However, if the dip-pipe is not available, invert the cylinder or can so as to withdraw liquid from the valve at the bottom.

4. SOUND DATA

Sound Power

Model	Ext. Static (mmAq)	Speed	1/1 Octave A-weighted Sound Power (dB), ref 1pW							Overall A (dBA)
			125Hz	250Hz	500Hz	1kHz	2kHz	4kHz	8kHz	
ACC 10C/CR	5	High	57	54	52	52	51	46	44	57
	4	Medium	54	51	50	49	48	43	39	54
	3	Low	51	48	47	46	44	39	35	51
ACC 15C/CR	5	High	60	58	57	56	54	48	44	61
	4	Medium	56	55	54	53	50	44	40	58
	3	Low	52	50	49	48	44	37	34	52
ACC 20C/CR	6.5	High	63	62	61	61	59	55	51	65
	6	Medium	61	61	59	60	58	53	49	64
	3.5	Low	57	56	56	56	53	48	44	60
ACC 25C/CR	5.5	High	63	52	61	62	59	56	53	66
	4	Medium	61	60	59	60	57	53	50	64
	3	Low	58	57	56	57	54	49	47	61
ACC 28C/CR	10	Super High	62	65	61	63	60	57	56	67
	8	High	59	61	58	61	57	54	52	64
	7	Medium	56	57	55	57	54	50	48	61
	6	Low	52	53	51	53	50	45	41	57
ACC 30C/CR	21	Super High	68	69	71	72	69	66	65	76
	17	High	65	66	68	69	65	63	60	73
	13	Medium	61	62	64	65	61	58	55	69
	9	Low	56	58	60	61	57	53	49	64
ACC 38C/CR	14	Super High	74	75	74	75	72	70	69	80
	12	High	70	70	71	72	68	66	64	76
	11	Medium	67	67	68	70	65	62	60	73
	9	Low	65	64	65	66	61	58	56	70
ACC 40C/CR	21	Super High	69	71	72	74	71	68	67	78
	18	High	65	68	70	72	68	66	64	76
	13	Medium	65	65	67	68	64	62	59	72
	9.5	Low	59	61	63	64	60	57	54	68
ACC 50C/CR	18	Super High	70	71	73	74	72	69	67	78
	16	High	67	69	71	72	69	66	64	76
	14	Medium	66	66	69	69	66	63	61	73
	11	Low	63	64	66	67	62	60	57	70
ACC 60C/CR	18	Super High	70	71	73	75	73	70	68	79
	16	High	69	70	72	74	71	69	68	78
	14	Medium	69	68	70	71	67	65	63	75
	10	Low	64	65	67	67	63	61	59	71

Duct Discharge Sound Power Level: Test with 5ft length discharge duct, terminated flush with internal wall ofreverberation room.

Sound Pressure

Model	Ext. Static (mmAq)	Speed	1/1 Octave A-weighted Sound Pressure (dBA), ref 20μPa							Overall A (dBA)	Noise Criteria
			125Hz	250Hz	500Hz	1kHz	2kHz	4kHz	8kHz		
ACC 10C/CR	5	High	33	30	30	29	22	16	10	33	27
	4	Medium	31	28	28	26	20	13	8	30	24
	3	Low	28	25	24	22	16	10	7	26	20
ACC 15C/CR	5	High	39	36	34	32	27	18	11	37	31
	4	Medium	35	34	32	29	23	14	9	34	27
	3	Low	32	29	28	25	17	11	8	29	23
ACC 20C/CR	6.5	High	42	39	36	34	28	22	17	38	33
	6	Medium	41	37	34	31	26	20	15	36	30
	3.5	Low	40	36	32	29	23	18	13	34	27
ACC 25C/CR	5.5	High	42	41	37	34	31	29	23	40	33
	4	Medium	41	40	36	33	29	28	22	39	32
	3	Low	36	35	33	31	26	27	21	36	30
ACC 28C/CR	10	Super High	48	45	42	38	34	29	26	44	37
	8	High	45	42	39	35	31	26	22	41	34
	7	Medium	42	38	37	32	28	22	17	38	32
	6	Low	36	33	33	27	23	16	11	34	27
ACC 30C/CR	21	Super High	54	50	46	45	40	34	30	49	44
	17	High	50	45	43	42	37	31	26	46	41
	13	Medium	45	40	40	38	32	26	20	42	37
	9	Low	42	36	37	33	28	22	15	38	32
ACC 38C/CR	14	Super High	56	57	53	50	46	41	36	55	49
	12	High	54	51	48	46	41	36	31	51	45
	11	Medium	51	48	46	45	37	32	26	48	44
	9	Low	47	45	44	41	34	28	22	45	40
ACC 40C/CR	21	Super High	56	49	49	46	41	37	32	51	45
	18	High	54	47	47	45	39	35	29	49	44
	13	Medium	49	42	43	41	35	31	24	45	40
	9.5	Low	45	39	41	37	30	26	18	41	36
ACC 50C/CR	18	Super High	56	50	50	49	44	38	33	53	48
	16	High	54	49	49	48	43	37	32	52	47
	14	Medium	53	47	46	47	40	35	29	50	46
	11	Low	51	45	44	44	36	32	26	47	43
ACC 60C/CR	18	Super High	57	50	51	51	46	39	35	55	50
	16	High	55	49	49	50	44	37	33	53	49
	14	Medium	53	46	47	47	39	34	28	50	46
	10	Low	51	43	44	43	35	30	24	47	42

Model	Speed	1/1 Octave A-Weighted Sound Pressure (dBA), ref 20μPa							Overall A (dBA)	Noise Criteria
		125Hz	250Hz	500Hz	1kHz	2kHz	4kHz	8kHz		
A5CC 10C/CR	High	39	37	33	30	27	17	11	36	29
	Medium	37	35	31	28	25	14	9	33	26
	Low	34	31	27	24	20	11	9	30	22
A5CC 15C/CR	High	41	36	37	33	29	22	14	38	32
	Medium	40	31	32	27	23	15	7	33	26
	Low	38	28	29	24	19	11	5	30	23
A5CC 20C/CR	High	46	41	39	37	30	23	18	41	36
	Medium	47	39	38	36	29	21	17	40	35
	Low	46	35	34	32	25	16	10	36	31
A5CC 25C/CR	High	46	41	40	39	31	24	17	42	38
	Medium	46	39	39	38	29	22	14	41	37
	Low	45	35	35	34	24	16	8	37	33
A5CC 28C/CR	Super High	48	45	42	38	34	29	26	44	37
	High	45	42	39	35	31	26	22	41	34
	Medium	42	38	37	32	28	22	17	38	32
	Low	36	33	33	27	23	16	11	34	27
A5CC 38C/CR	Super High	56	57	53	50	46	41	36	55	49
	High	54	51	48	46	41	36	31	51	45
	Medium	51	48	46	45	37	32	26	48	44
	Low	47	45	44	41	34	28	22	45	40
A5CC 50C/CR	Super High	56	50	50	49	44	38	33	53	48
	High	54	49	49	48	43	37	32	52	47
	Medium	53	47	46	47	40	35	29	50	46
	Low	51	45	44	44	36	32	26	47	43
A5CC 60C/CR	Super High	57	50	51	51	46	39	35	55	50
	High	55	49	49	50	44	37	33	53	49
	Medium	53	46	47	47	39	34	28	50	46
	Low	51	43	44	43	35	30	24	47	42

Microphone position: 1.4m below the centre of the unit. (GB Standard - GB/D17758)
Tested with 2m length duct at the air discharge outlet and air return inlet.

Measuring Location:

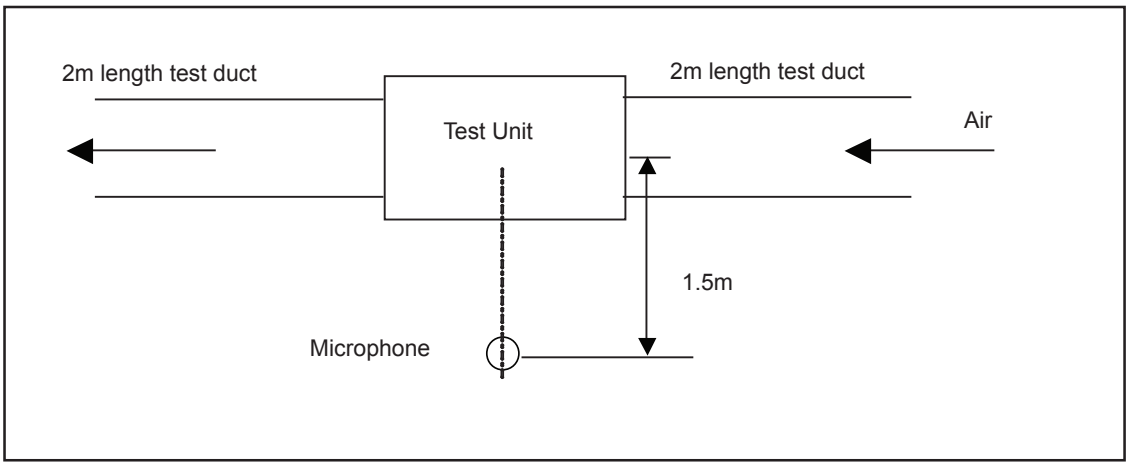

NC Curves

ACC10C/CR NC Curves

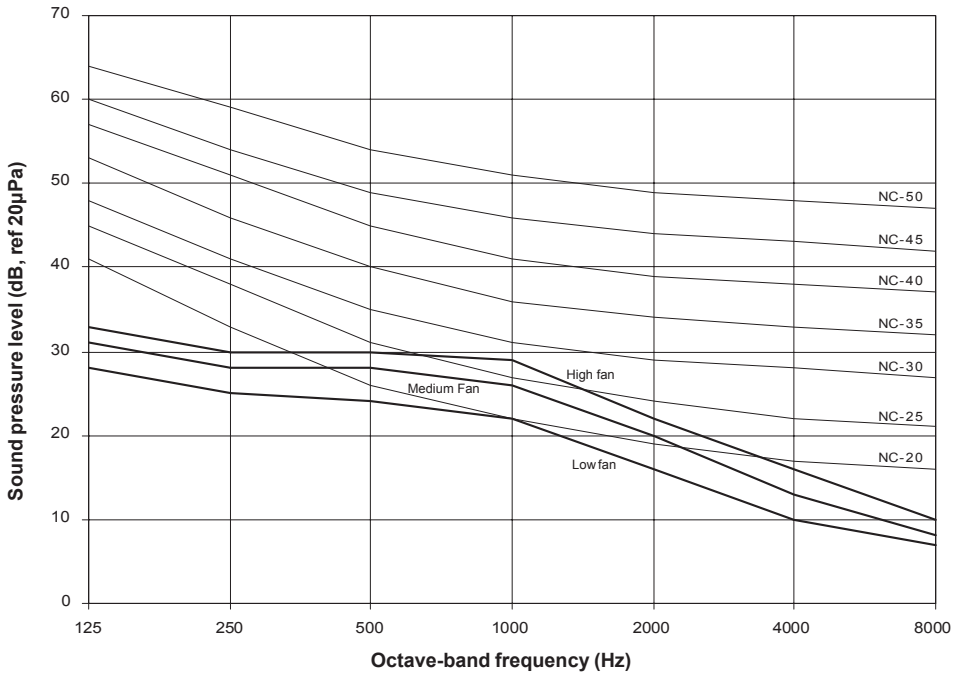

Measured in anechoic room at 1.5m below the centre of the unit
Tested with 2m length duct at the air discharge outlet and air return inlet

ACC15C/CR NC Curves

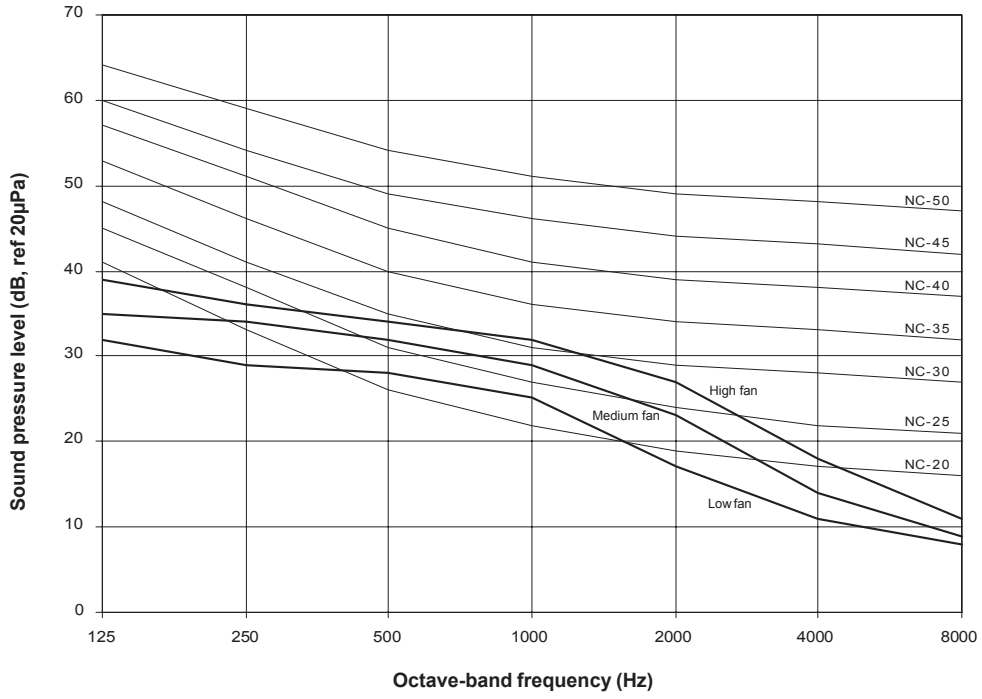

Measured in anechoic room at 1.5m below the centre of the unit
Tested with 2m length duct at the air discharge outlet and air return inlet

ACC20C/CR NC Curves

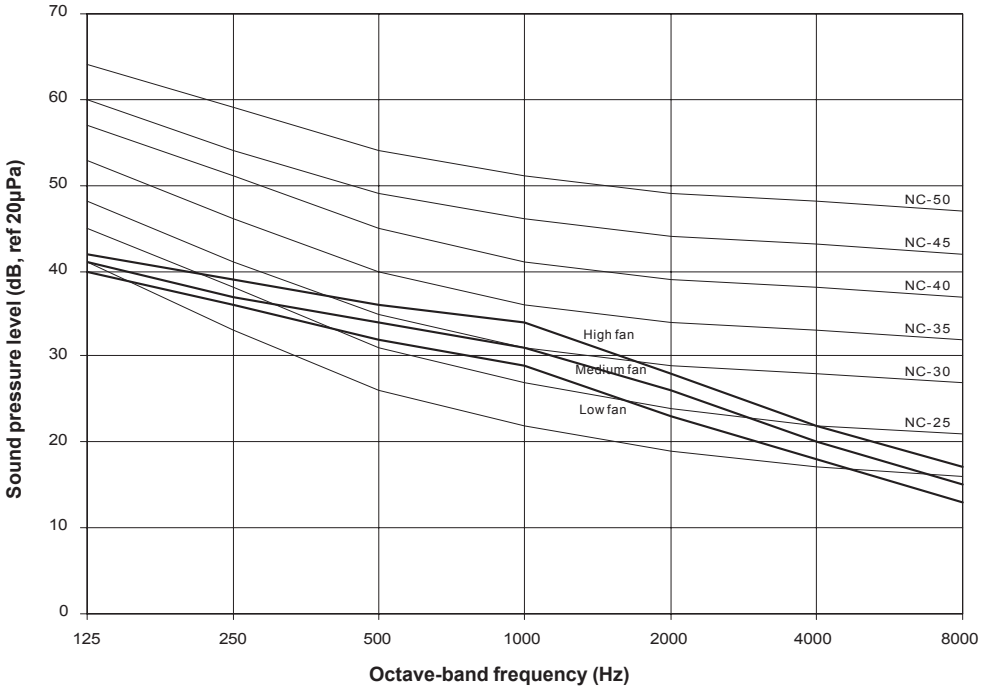

Measured in anechoic room at 1.5m below the centre of the unit
Tested with 2m length duct at the air discharge outlet and air return inlet

ACC25C/CR NC Curves

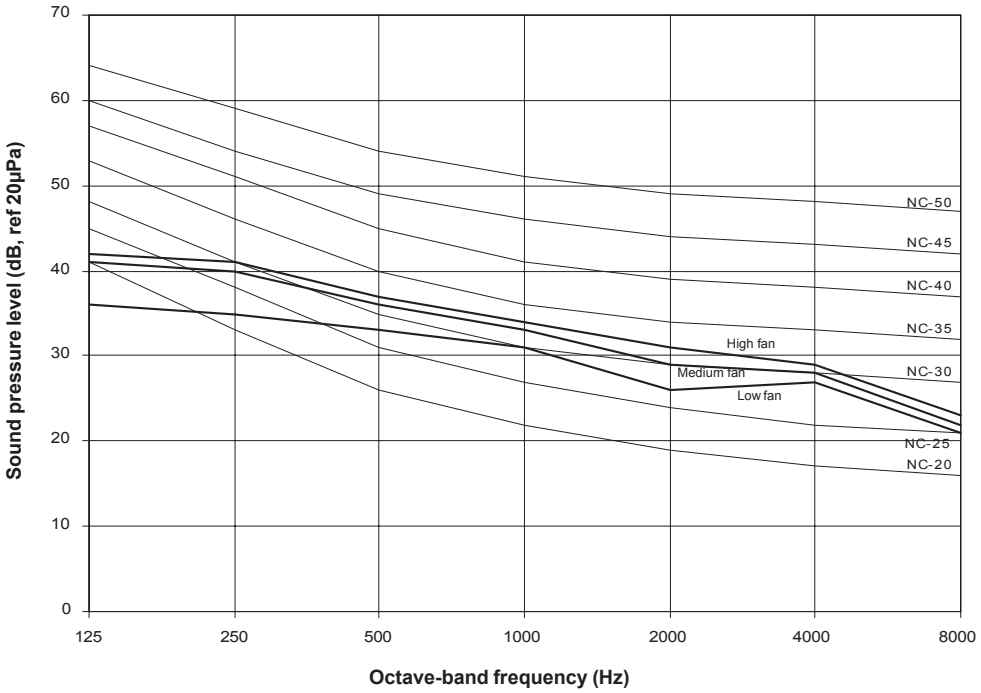

Measured in anechoic room at 1.5m below the centre of the unit
Tested with 2m length duct at the air discharge outlet and air return inlet

ACC28C/CR NC Curves

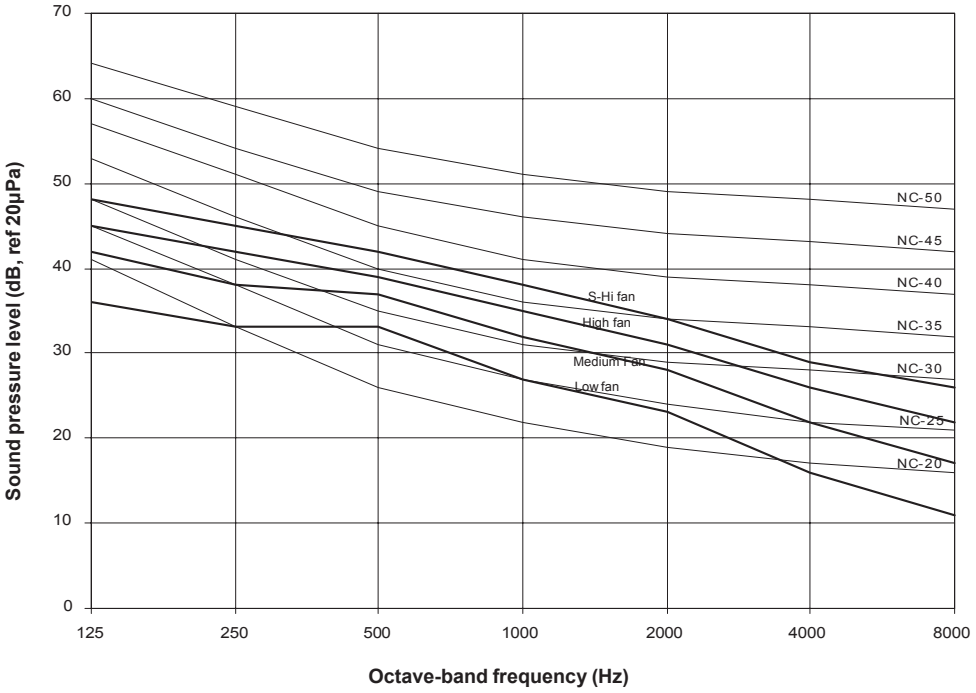

Measured in anechoic room at 1.5m below the centre of the unit
Tested with 2m length duct at the air discharge outlet and air return inlet

ACC30C/CR NC Curves

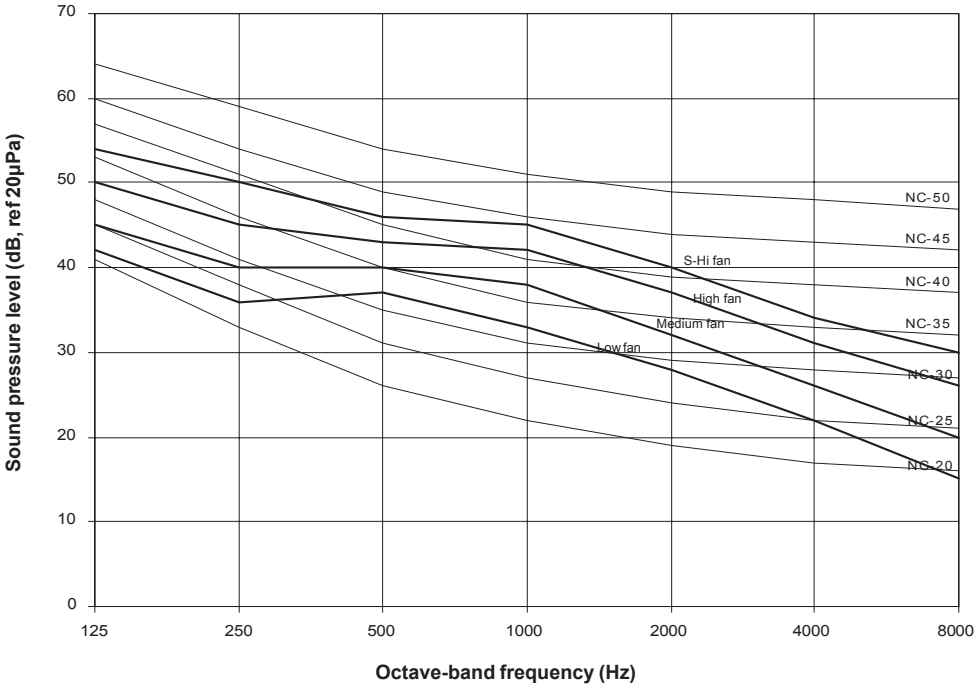

Measured in anechoic room at 1.5m below the centre of the unit
Tested with 2m length duct at the air discharge outlet and air return inlet

ACC38C/CR NC Curves

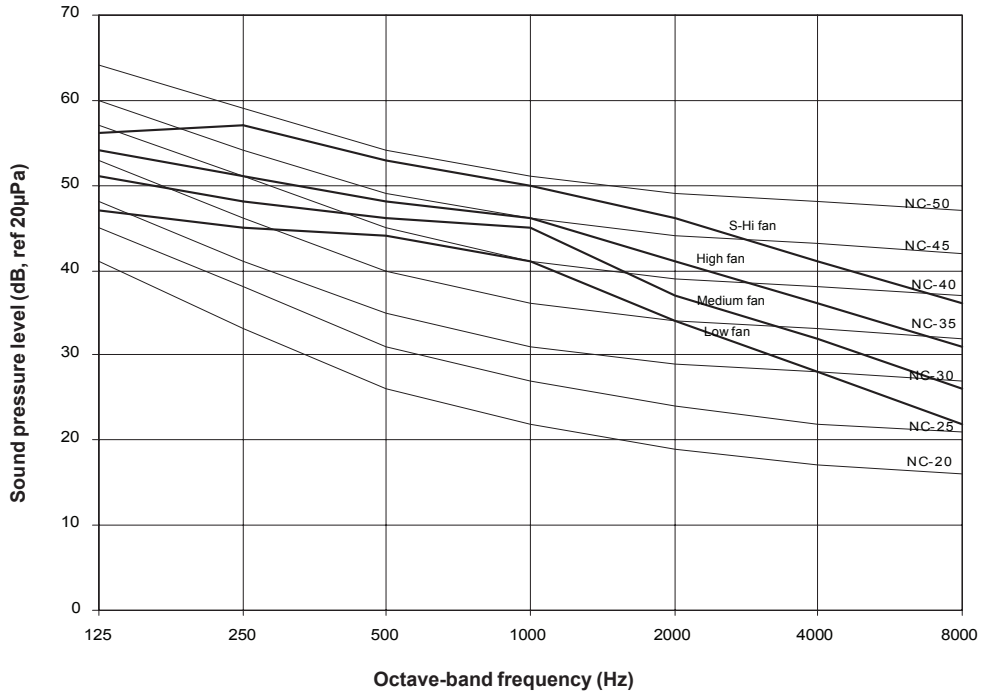

Measured in anechoic room at 1.4m below the centre of the unit
Tested with 2m length duct at the air discharge outlet and air return inlet

ACC40C/CR NC Curves

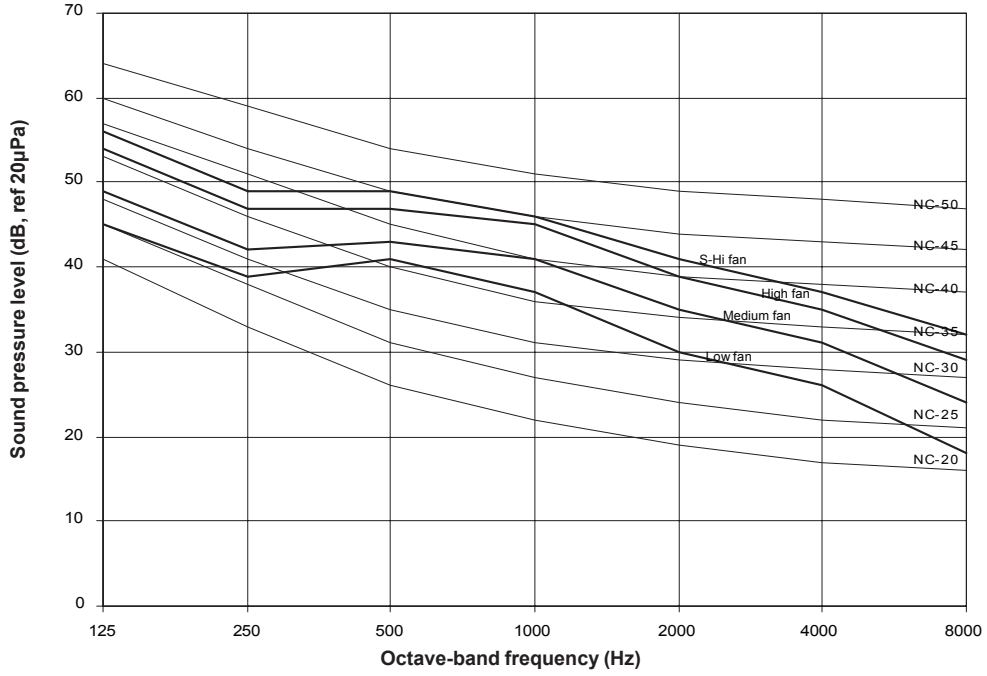

Measured in anechoic room at 1.4m below the centre of the unit
Tested with 2m length duct at the air discharge outlet and air return inlet

ACC50C/CR NC Curves

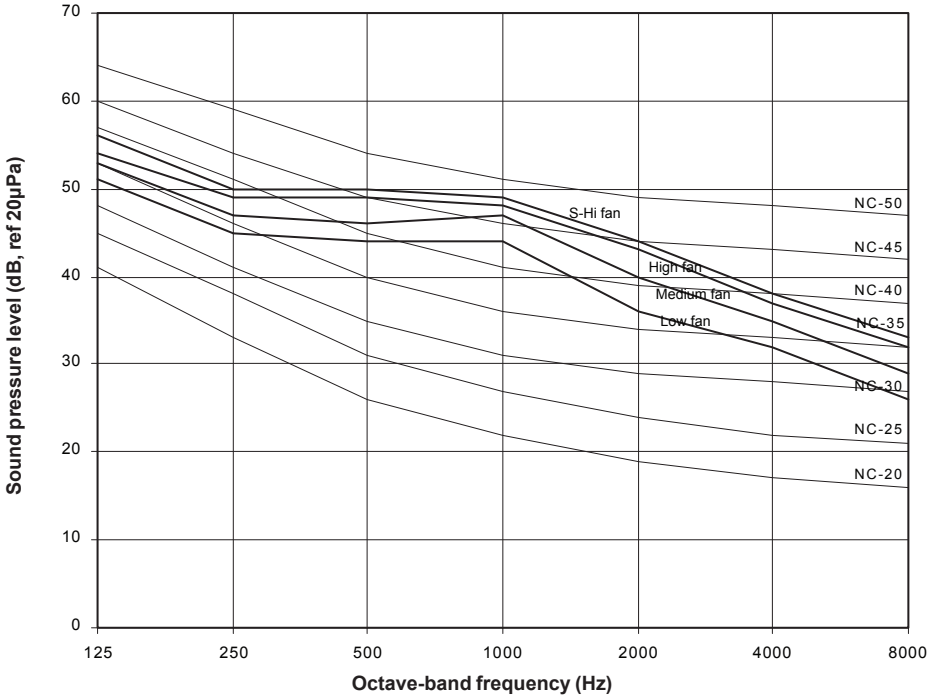

Measured in anechoic room at 1.5m below the centre of the unit
Tested with 2m length duct at the air discharge outlet and air return inlet

ACC60C/CR NC Curves

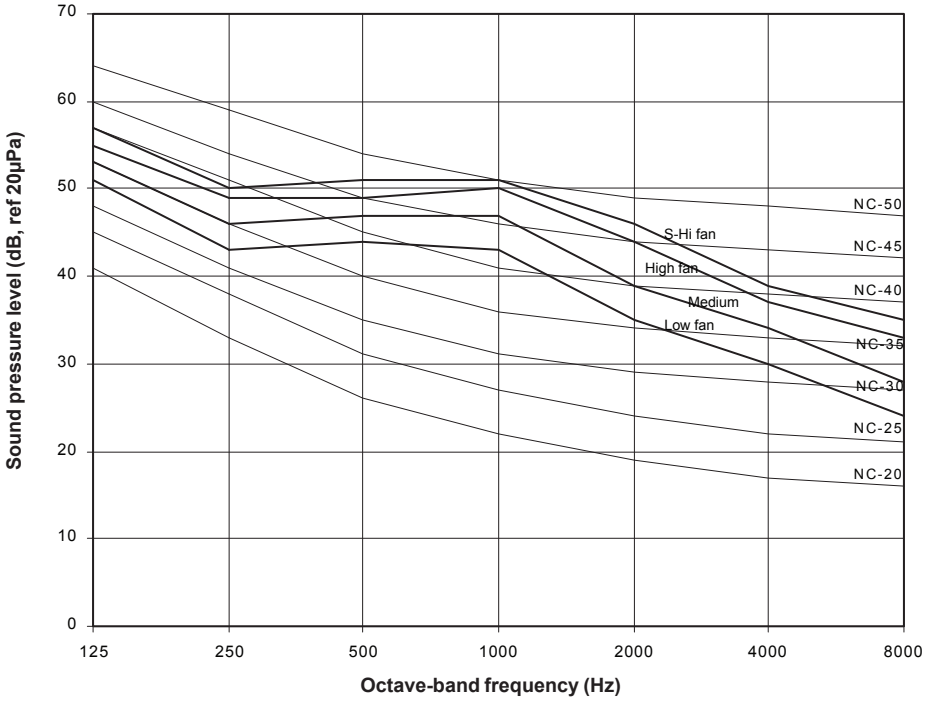

Measured in anechoic room at 1.5m below the centre of the unit
Tested with 2m length duct at the air discharge outlet and air return inlet

A5CC10C/CR NC Curves

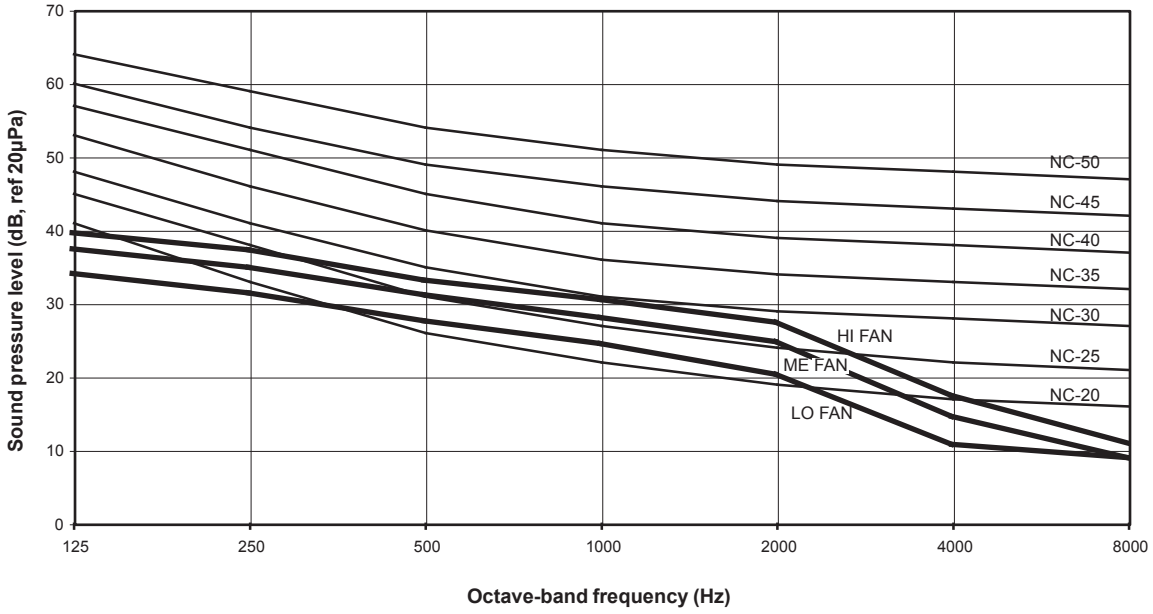

A5CC15C/CR NC Curves

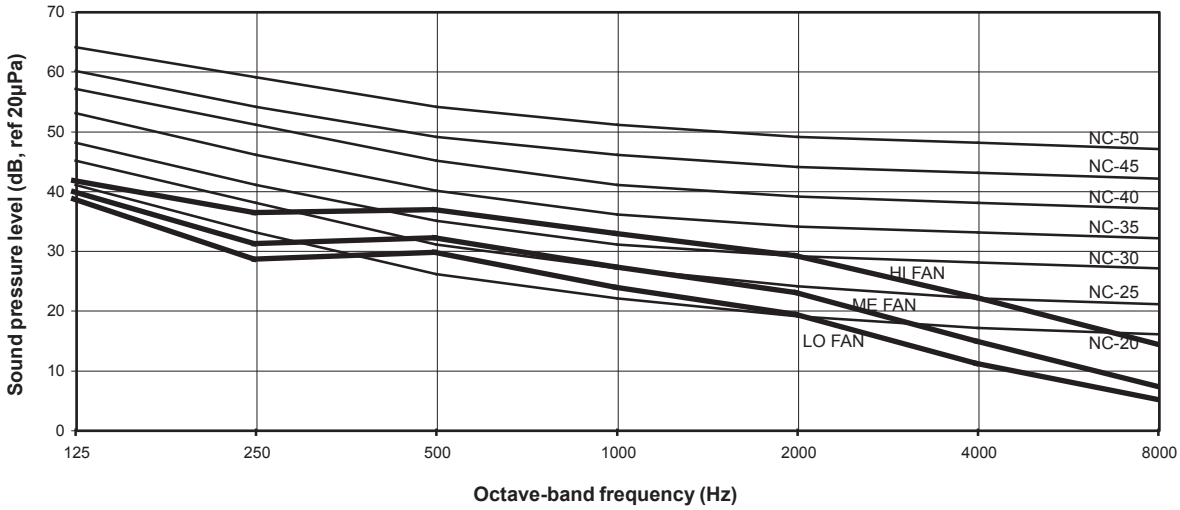

A5CC20C/CR NC Curves

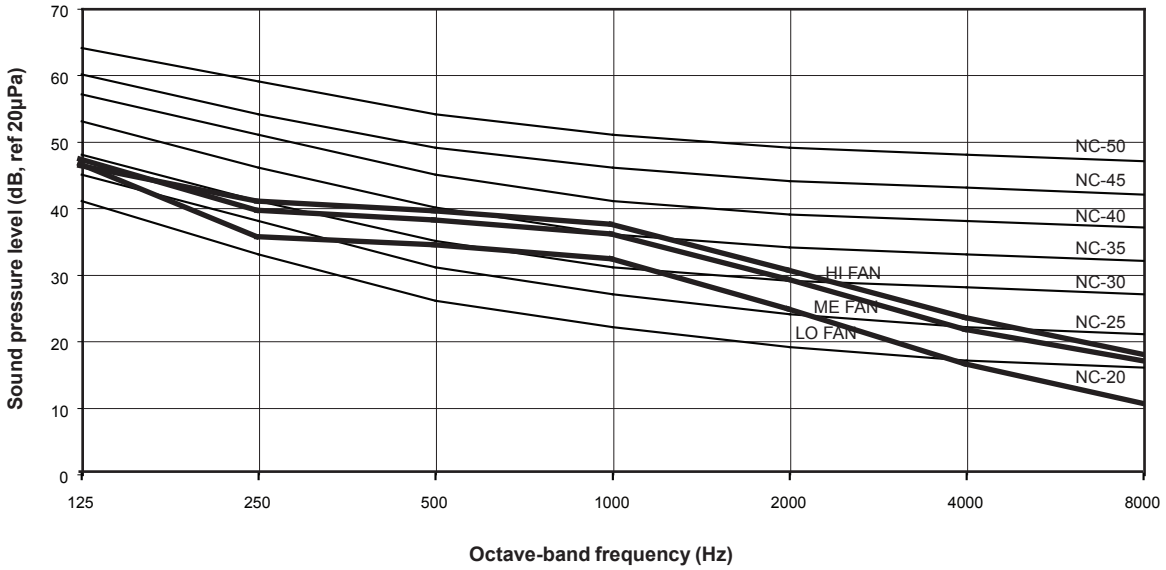

A5CC25C/CR NC Curves

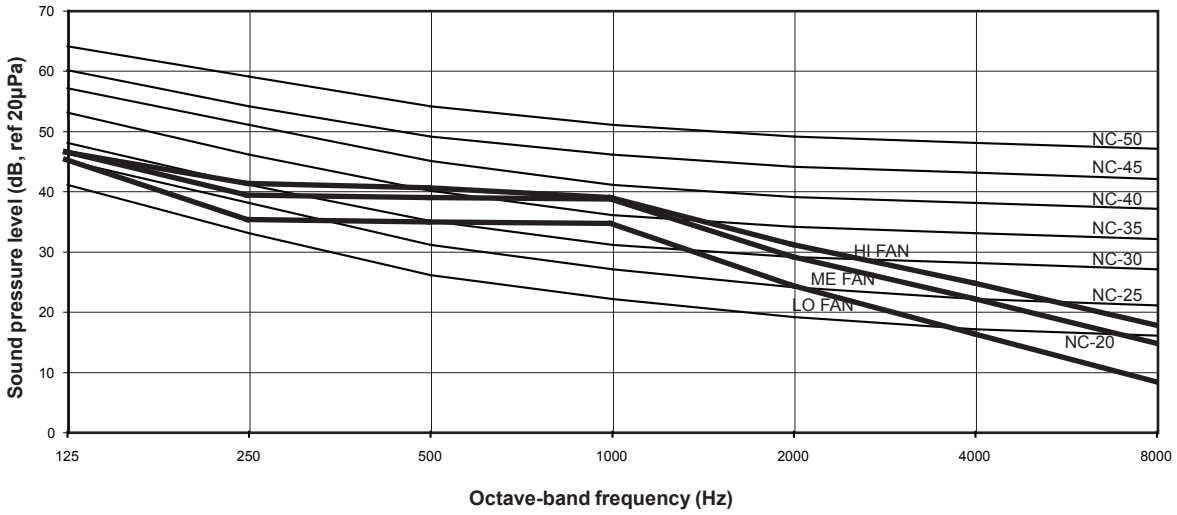

ACC10C/CR NC Curves
(Low Static)

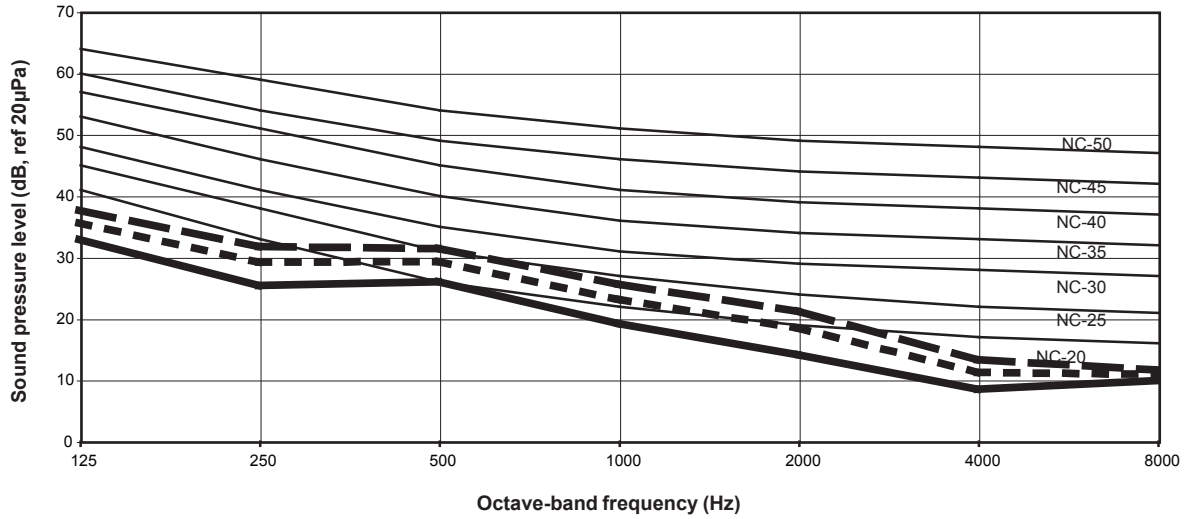

ACC15C/CR NC Curves
(Low Static)

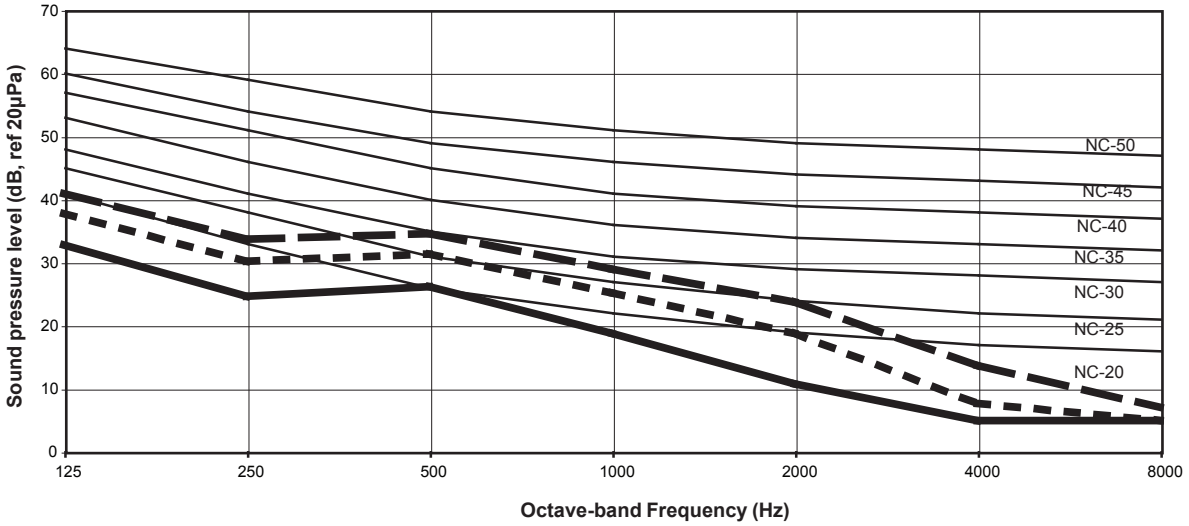

ACC20C/CR NC Curves
(Low Static)

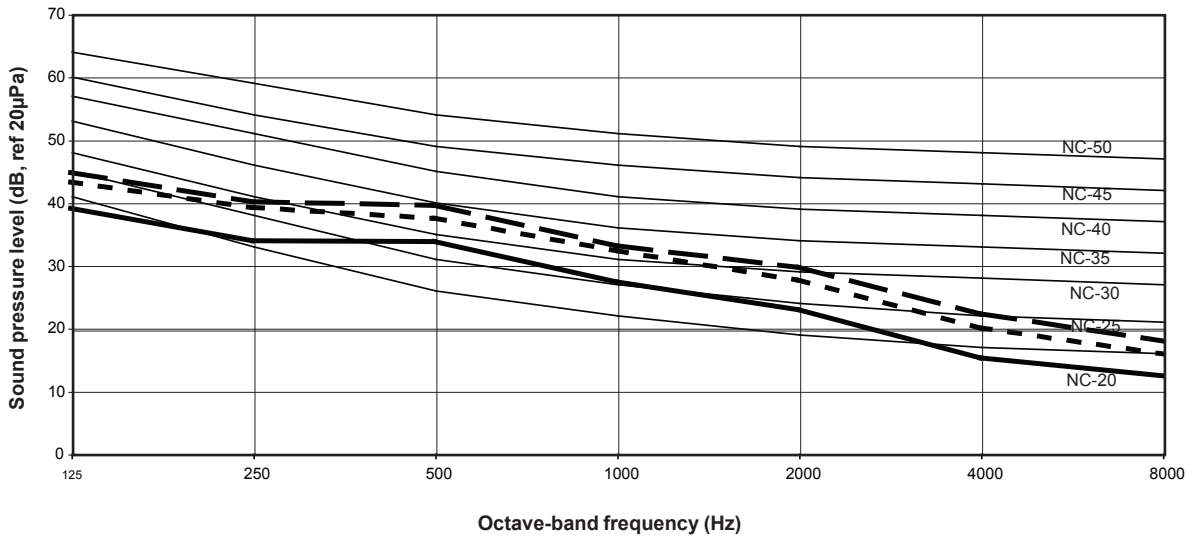

ACC25C/CR NC Curves
(Low Static)

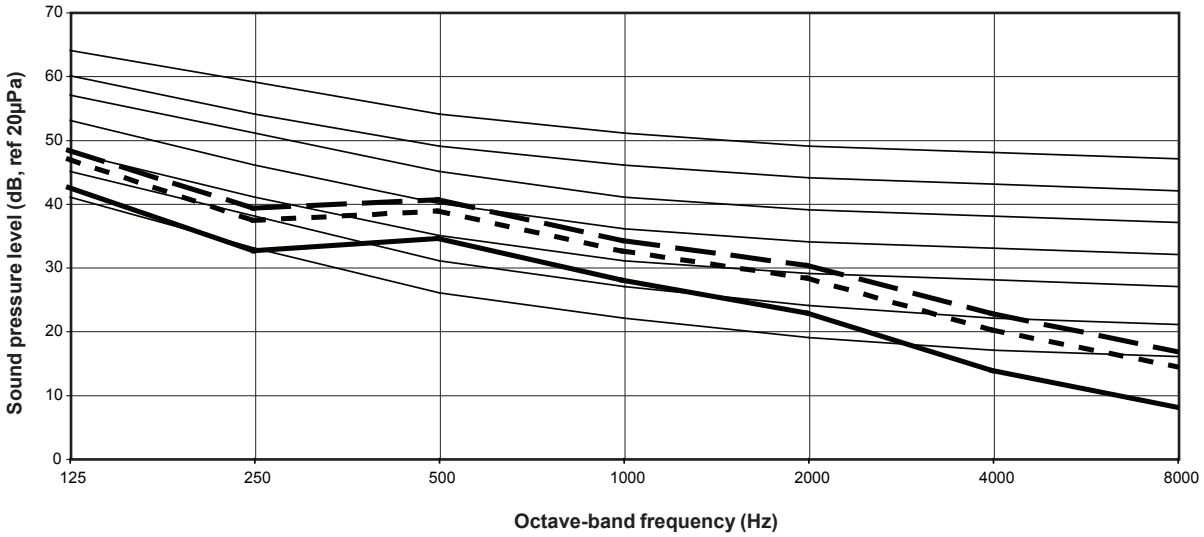

ACC30C/CR NC Curves
(Low Static)

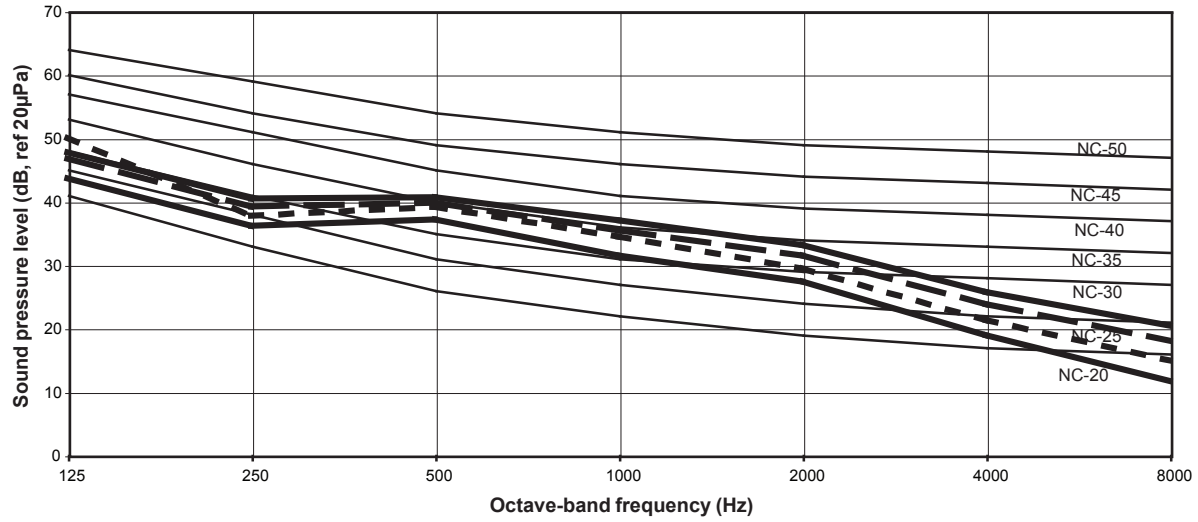

ACC40C/CR NC Curves
(Low Static)

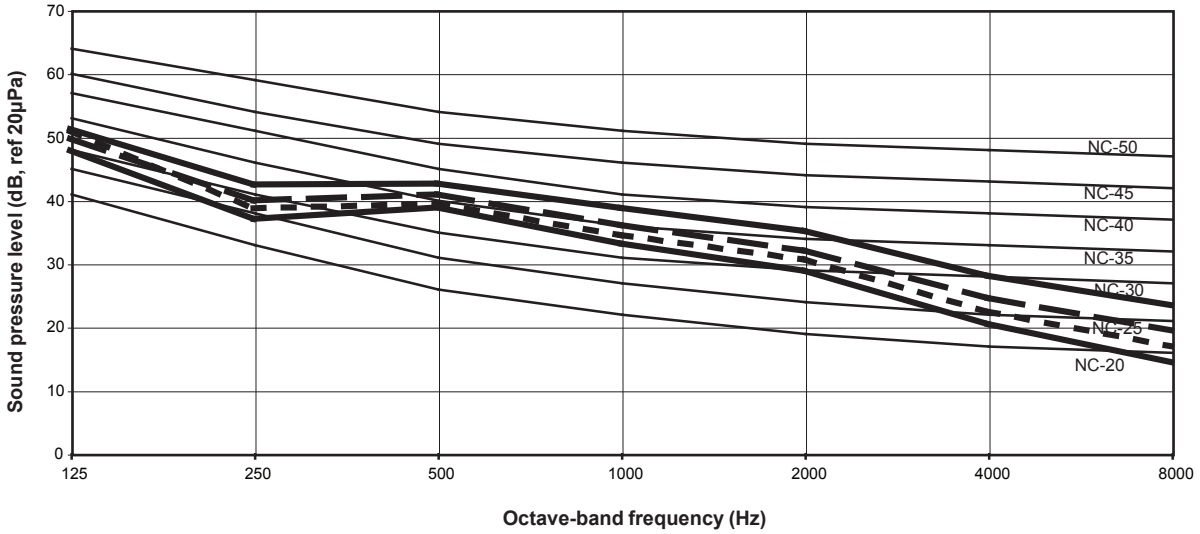

ACC50C/CR NC Curves
(Low Static)

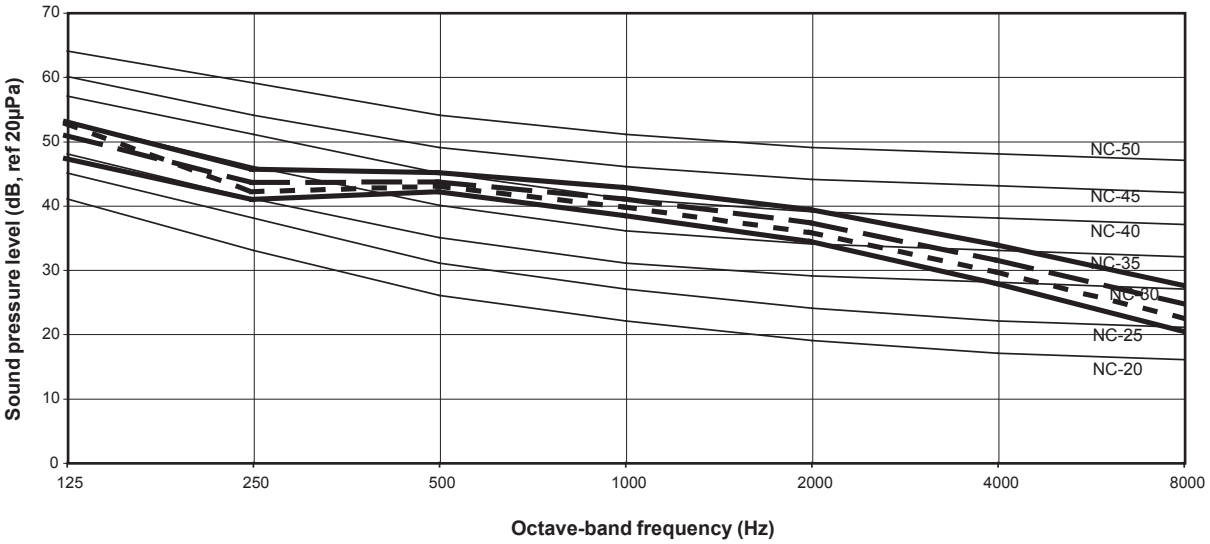

ACC60C/CR NC Curves
(Low Static)

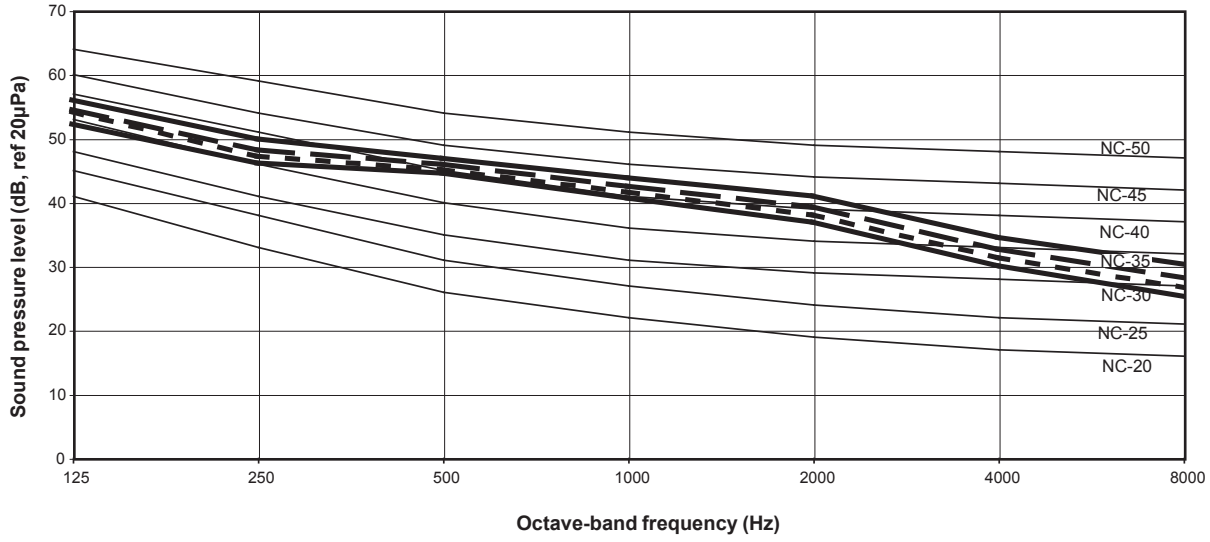

5. SELECTION PROCESS

ACC10C/CR Blower Performance Curve
(Standard Static)

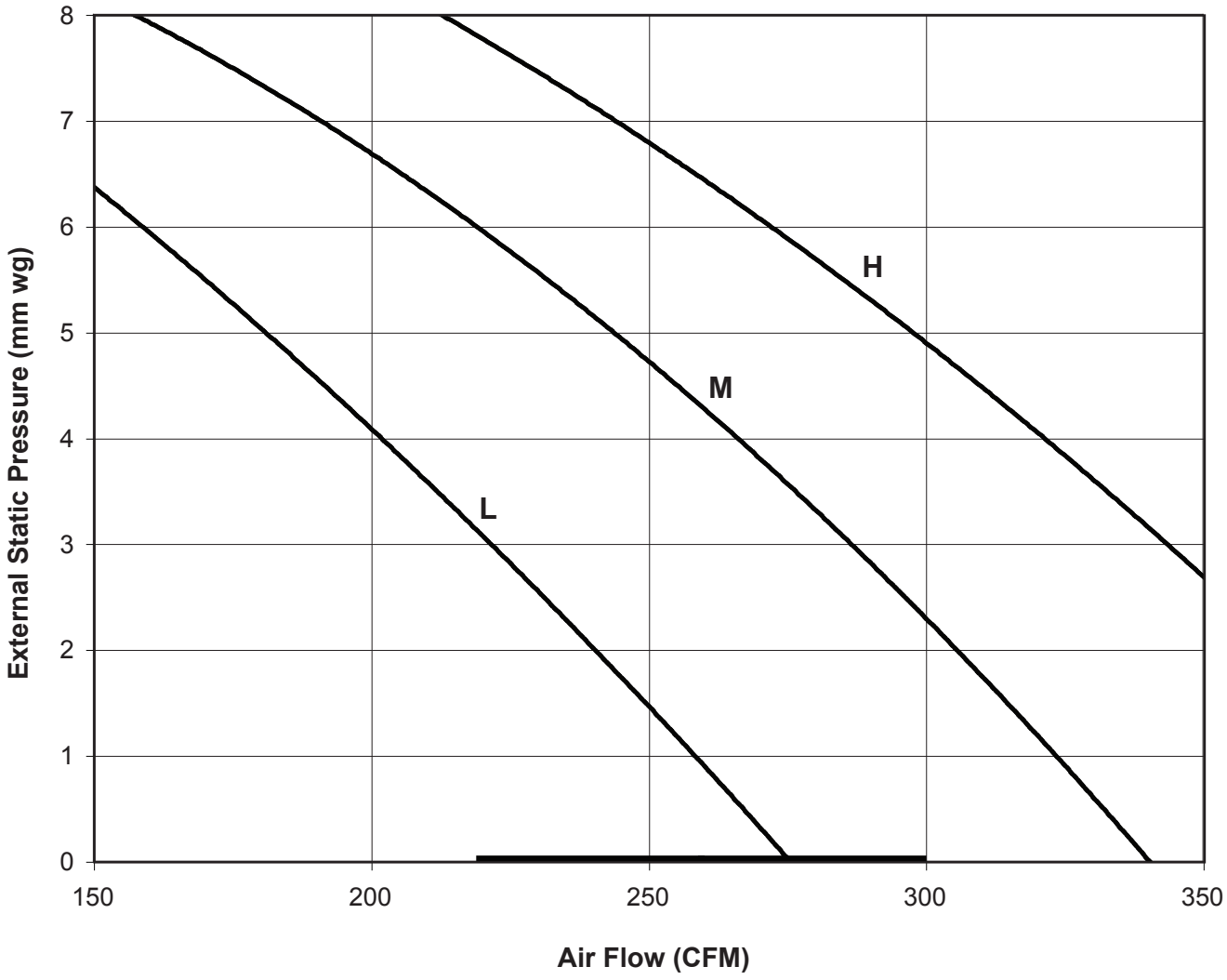

ACC15C/CR Blower Performance Curve
(Standard Static)

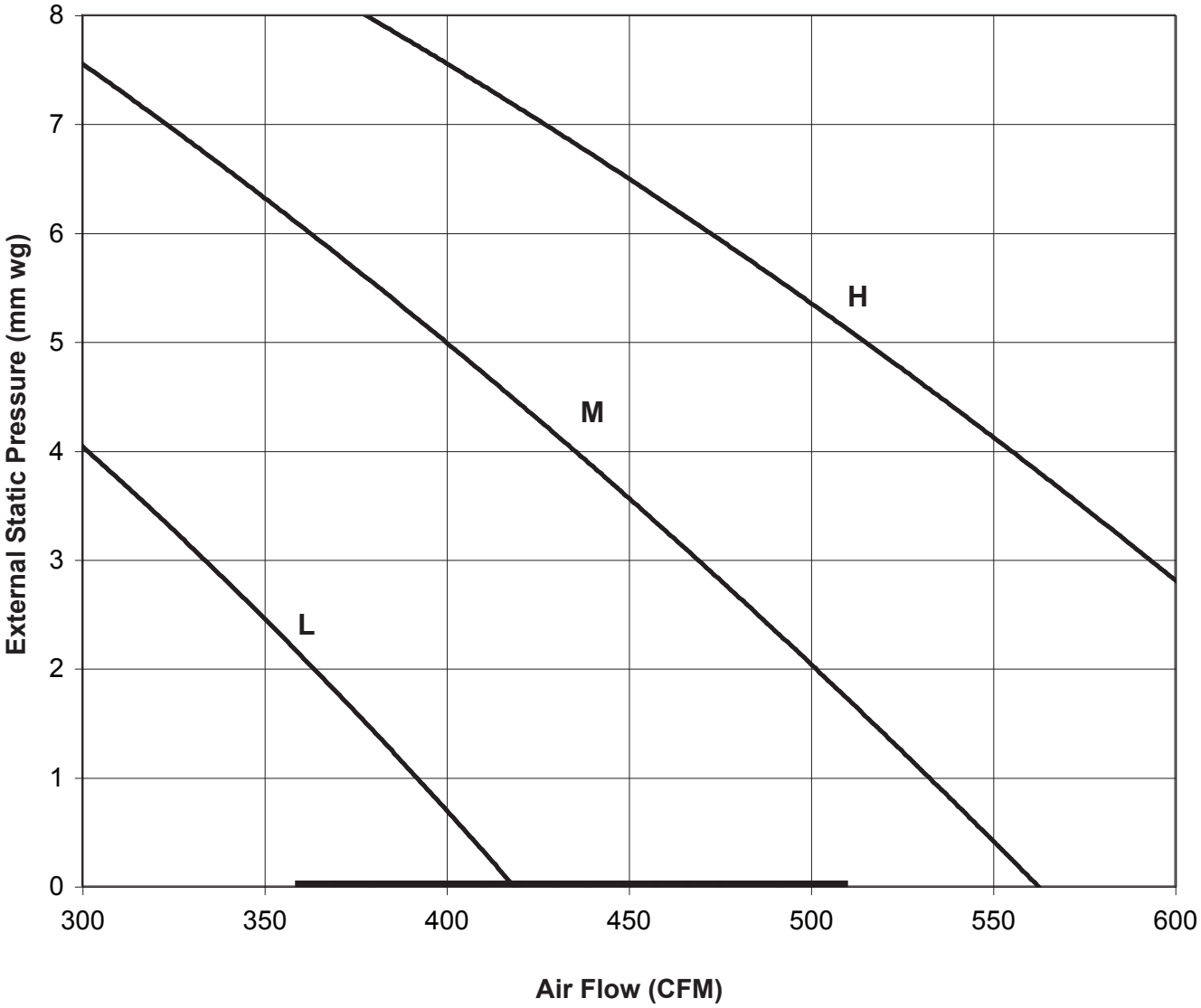

ACC20C/CR Blower Performance Curve
(Standard Static)

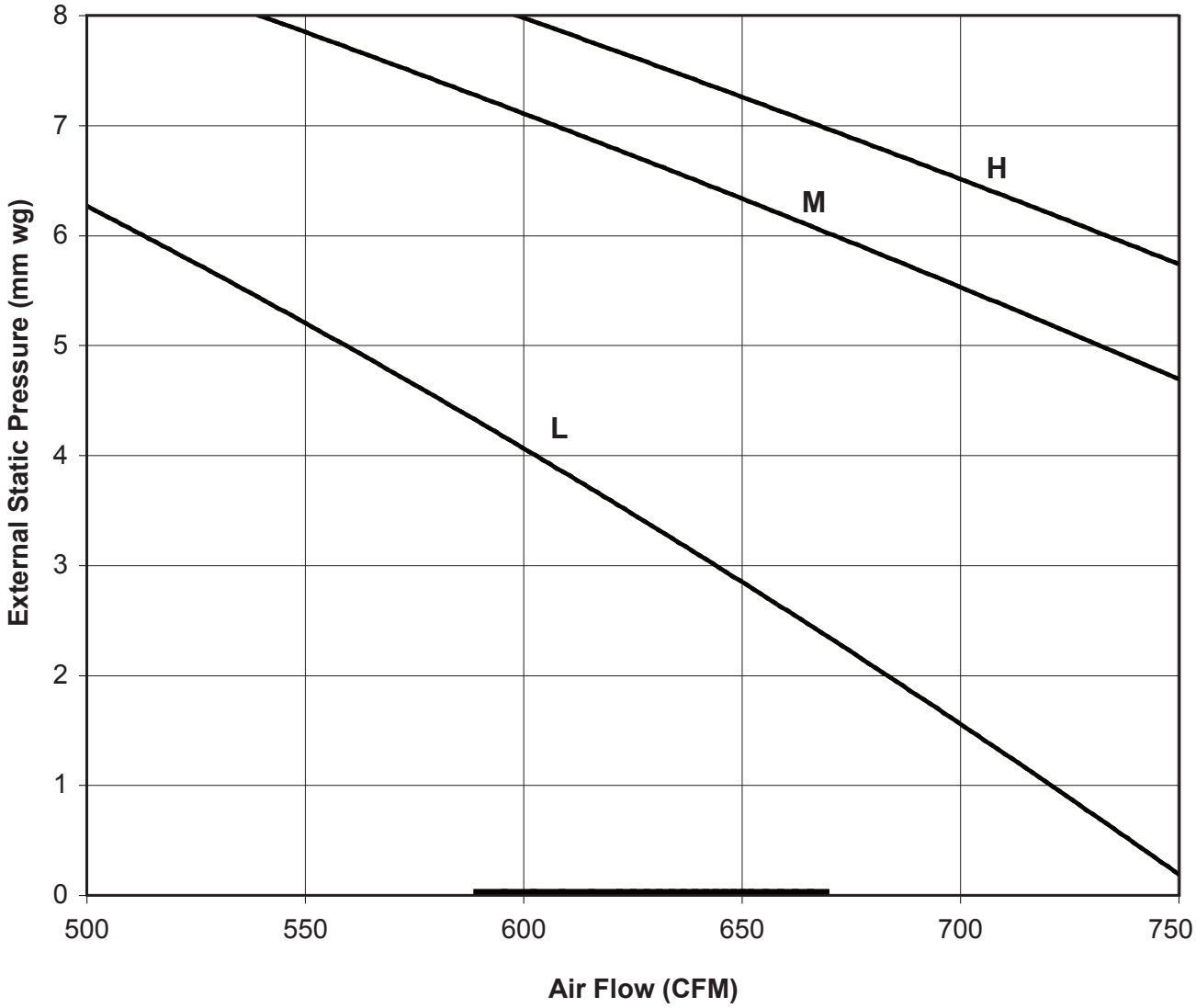

ACC25C/CR Blower Performance Curve
(Standard Static)

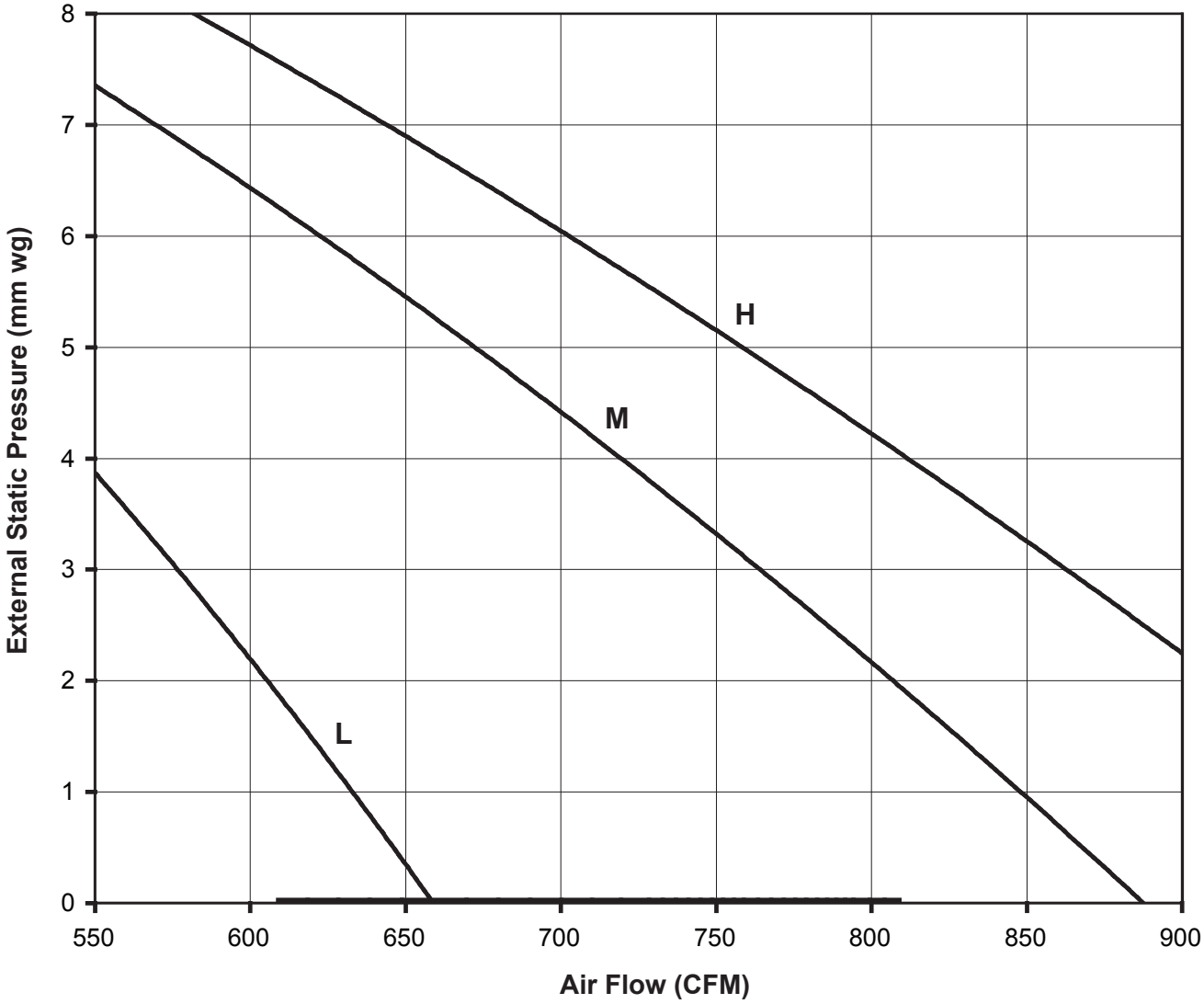

ACC28C/CR Blower Performance Curve
(Standard Static)

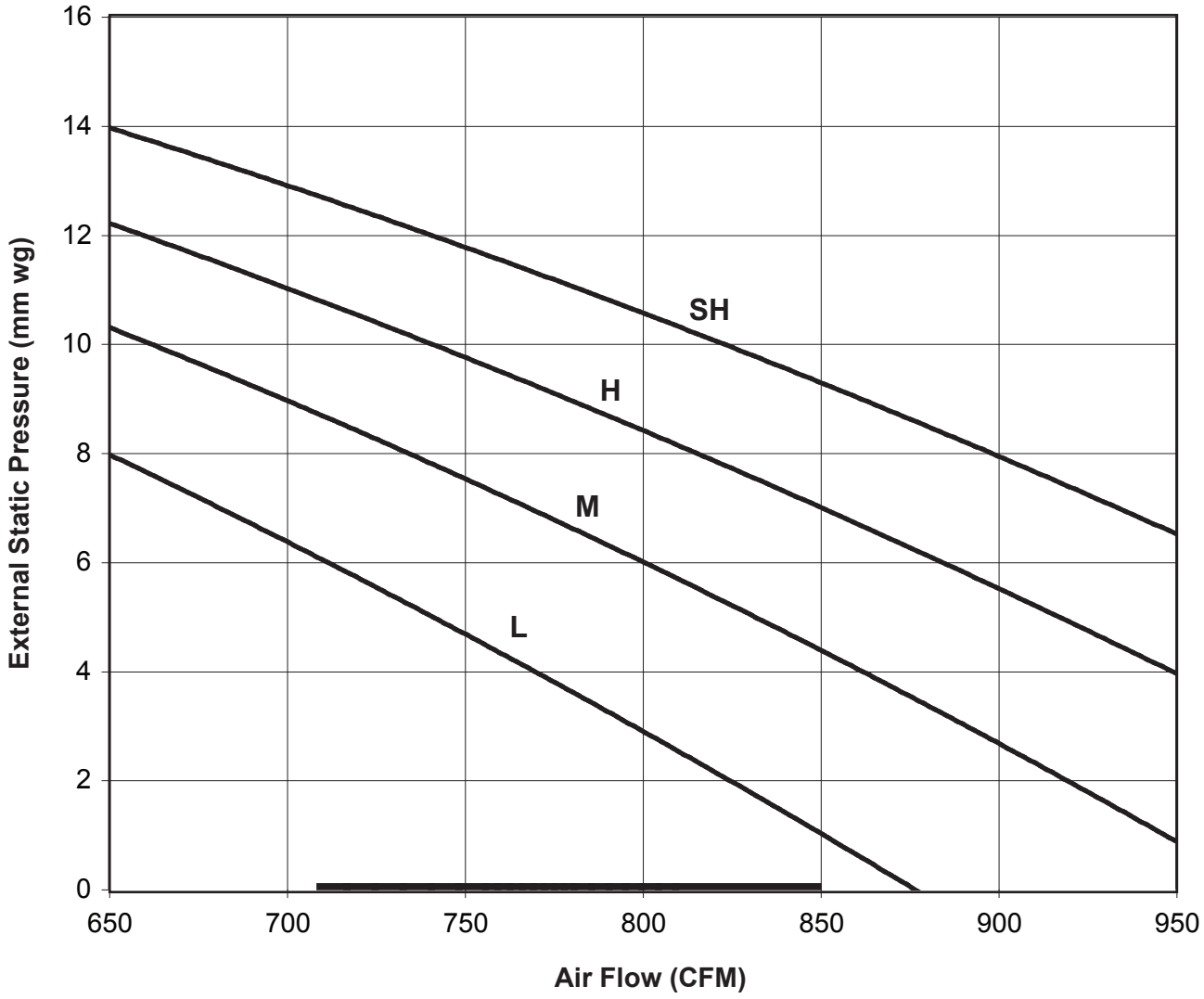

ACC30C/CR Blower Performance Curve
(Standard Static)

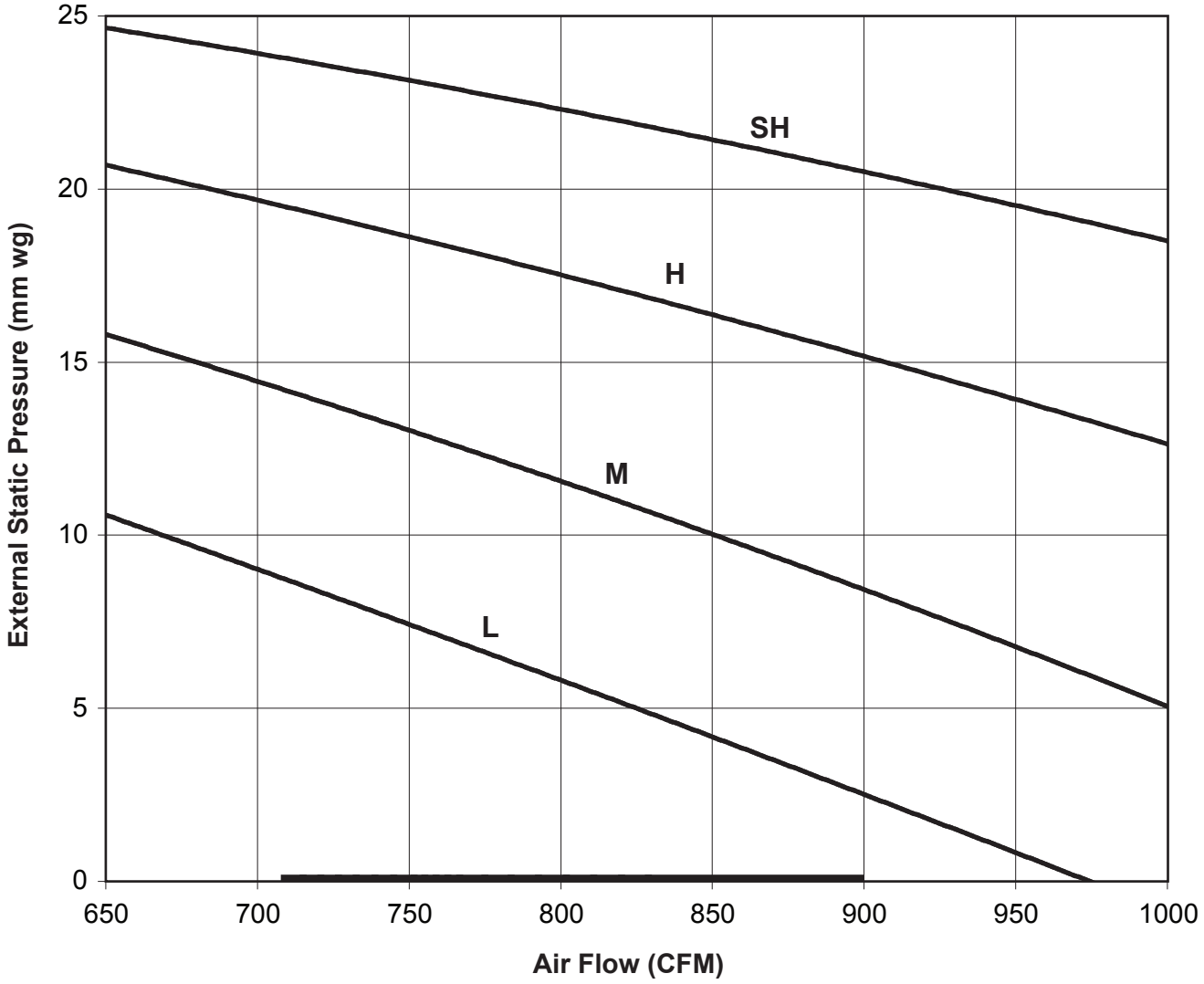

ACC38C/CR Blower Performance Curve
(Standard Static)

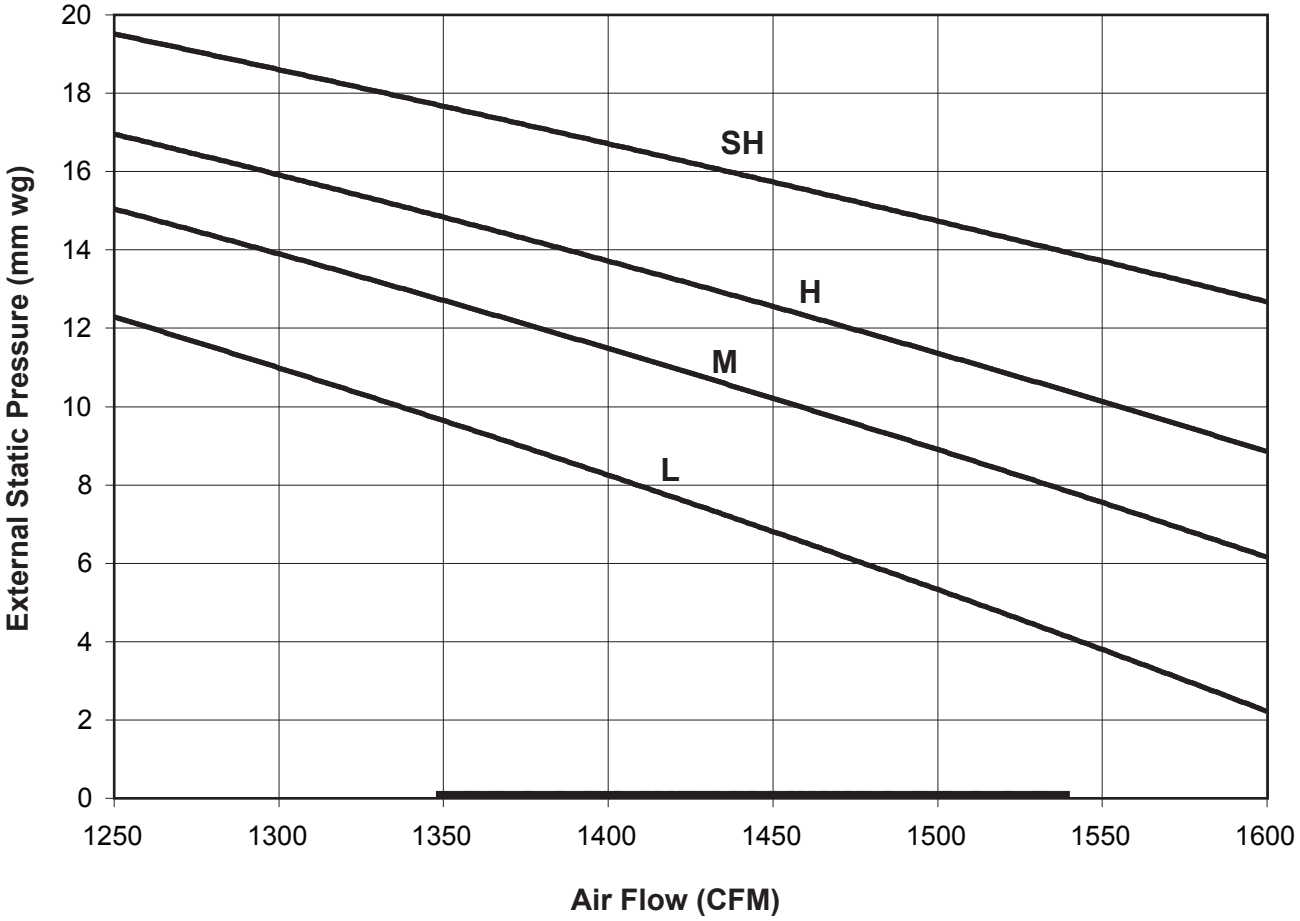

ACC40C/CR Blower Performance Curve
(Standard Static)

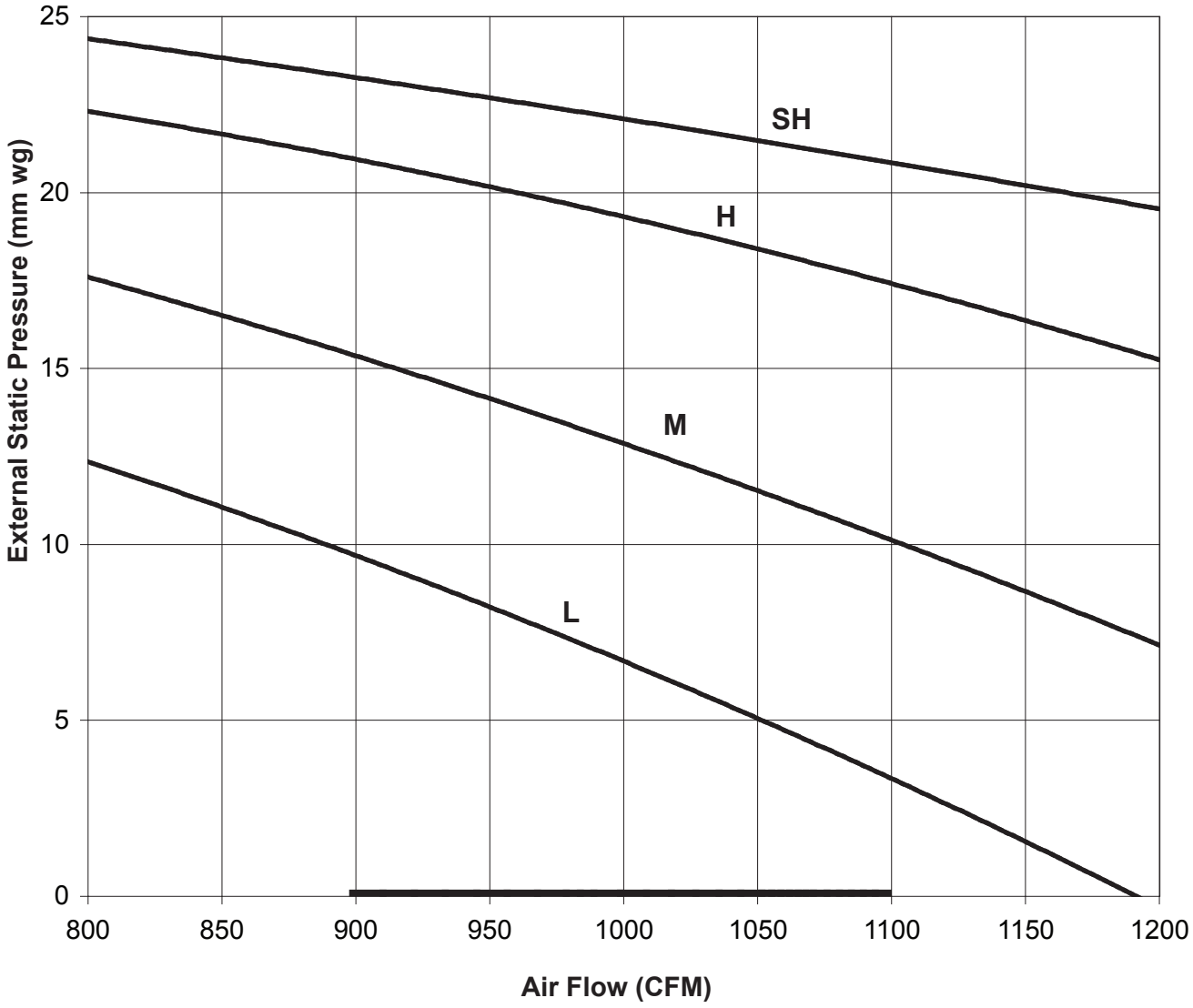

ACC50C/CR Blower Performance Curve
(Standard Static)

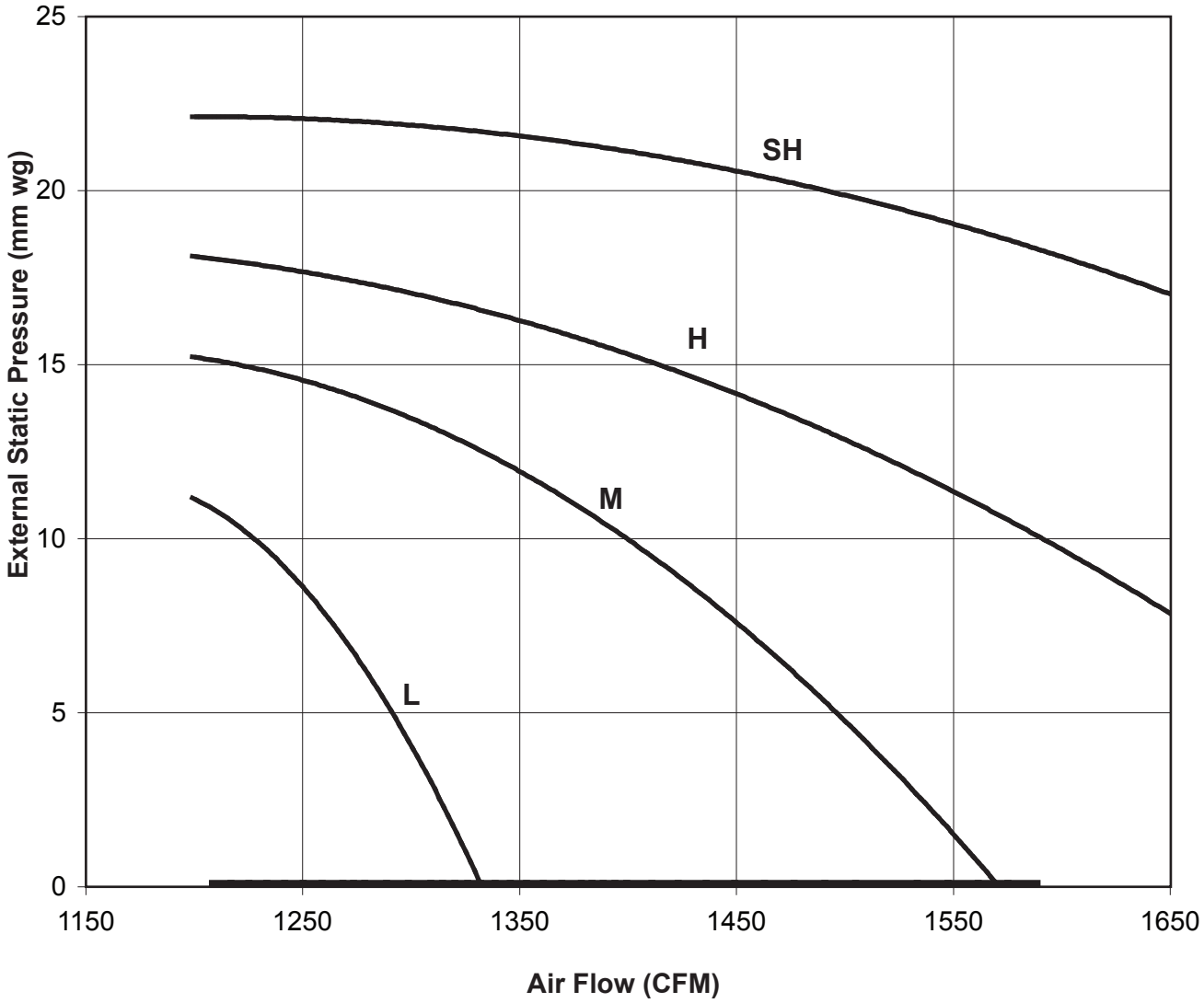

ACC60C/CR Blower Performance Curve
(Standard Static)

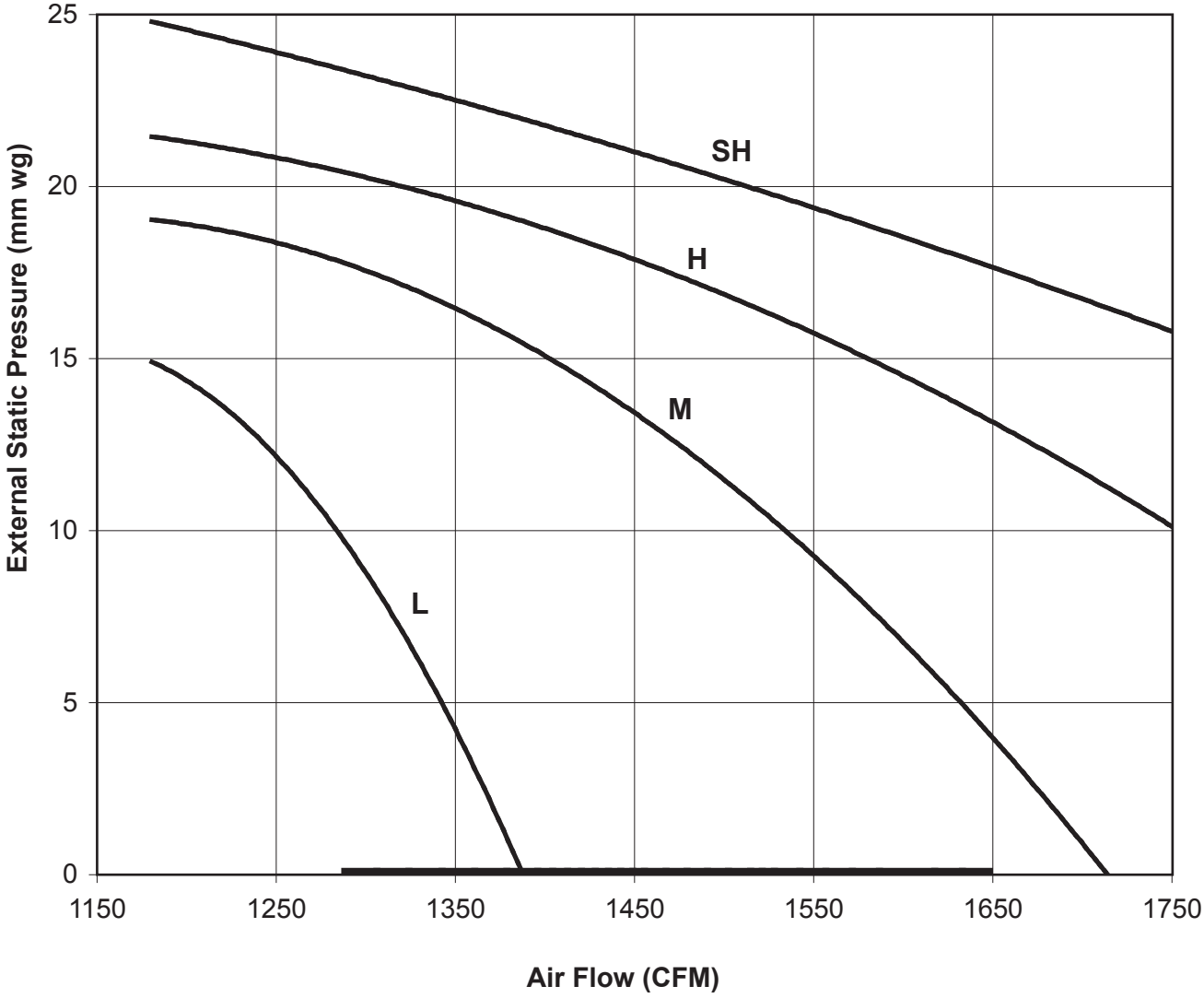

A5CC10C/CR Blower Performance Curve

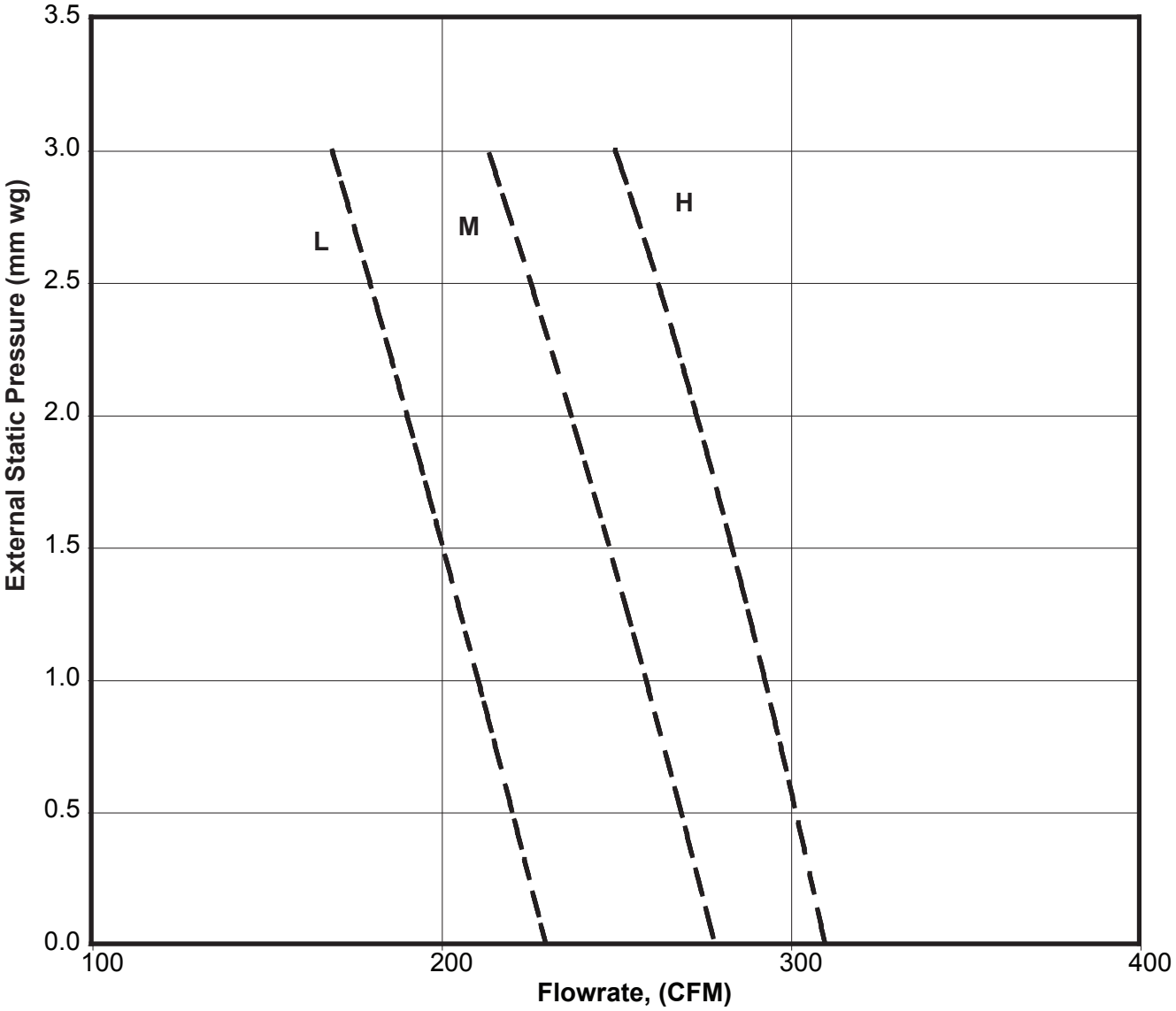

A5CC15C/CR Blower Performance Curve

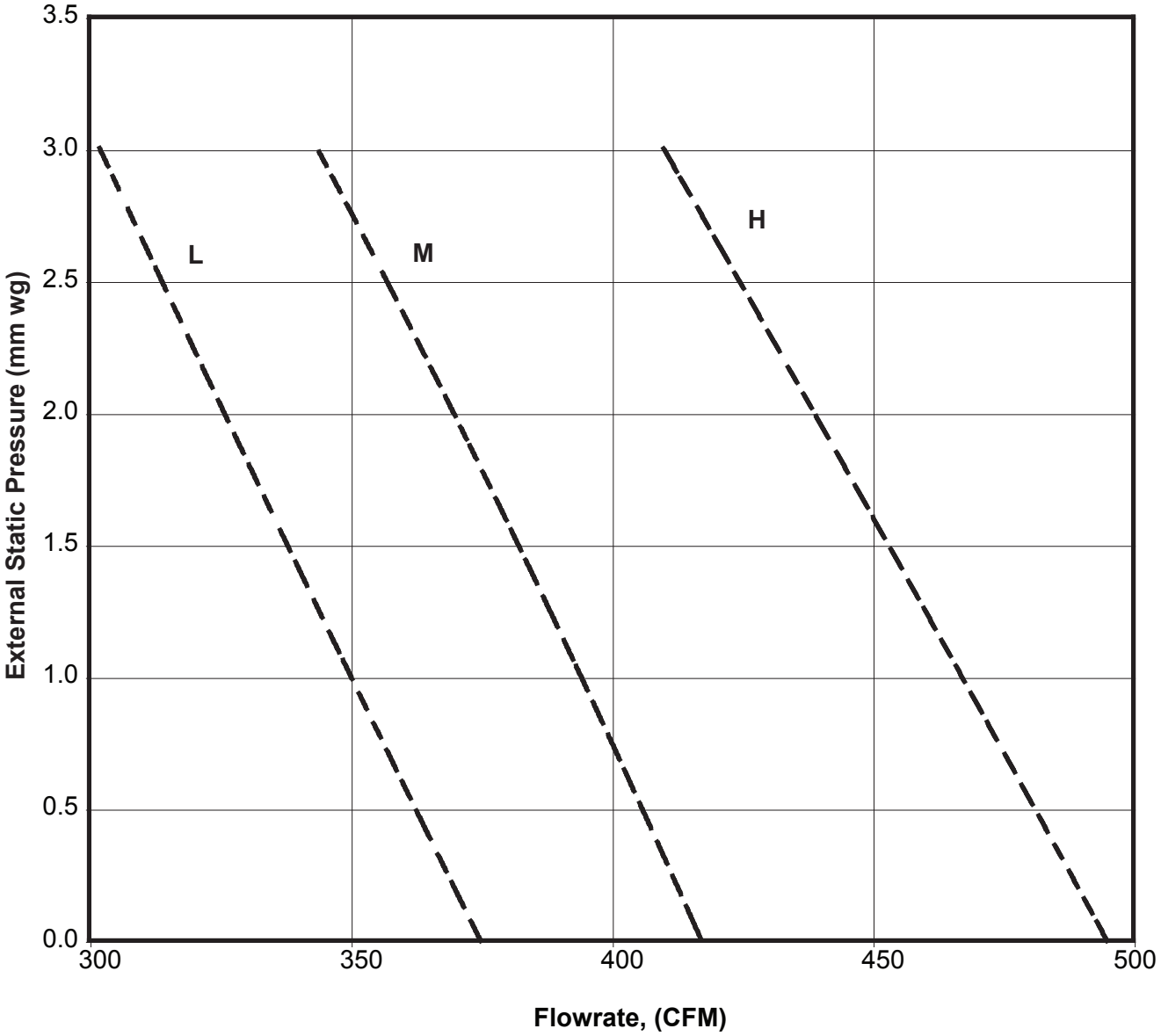

A5CC20C/CR Blower Performance Curve

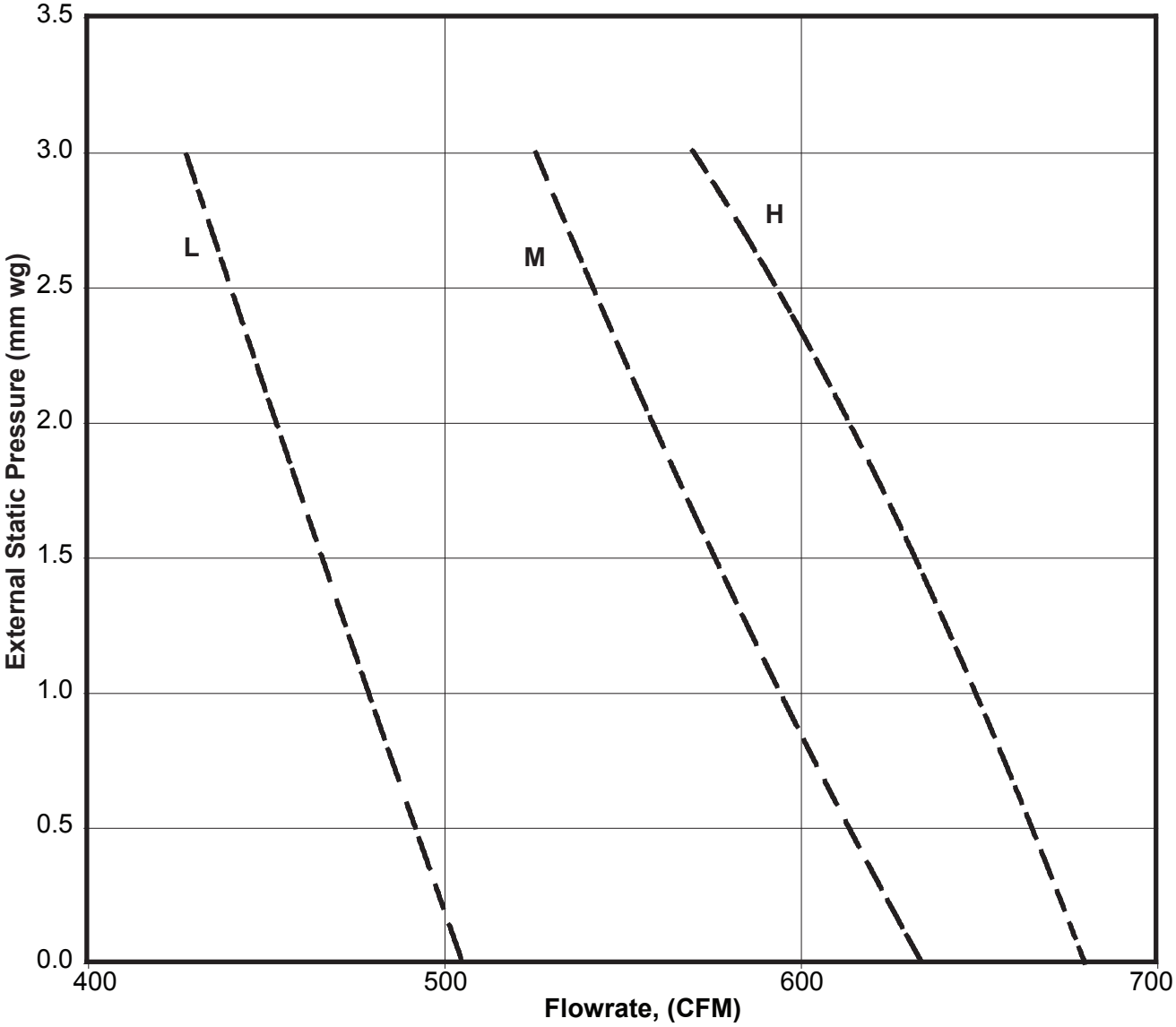

A5CC25C/CR Blower Performance Curve

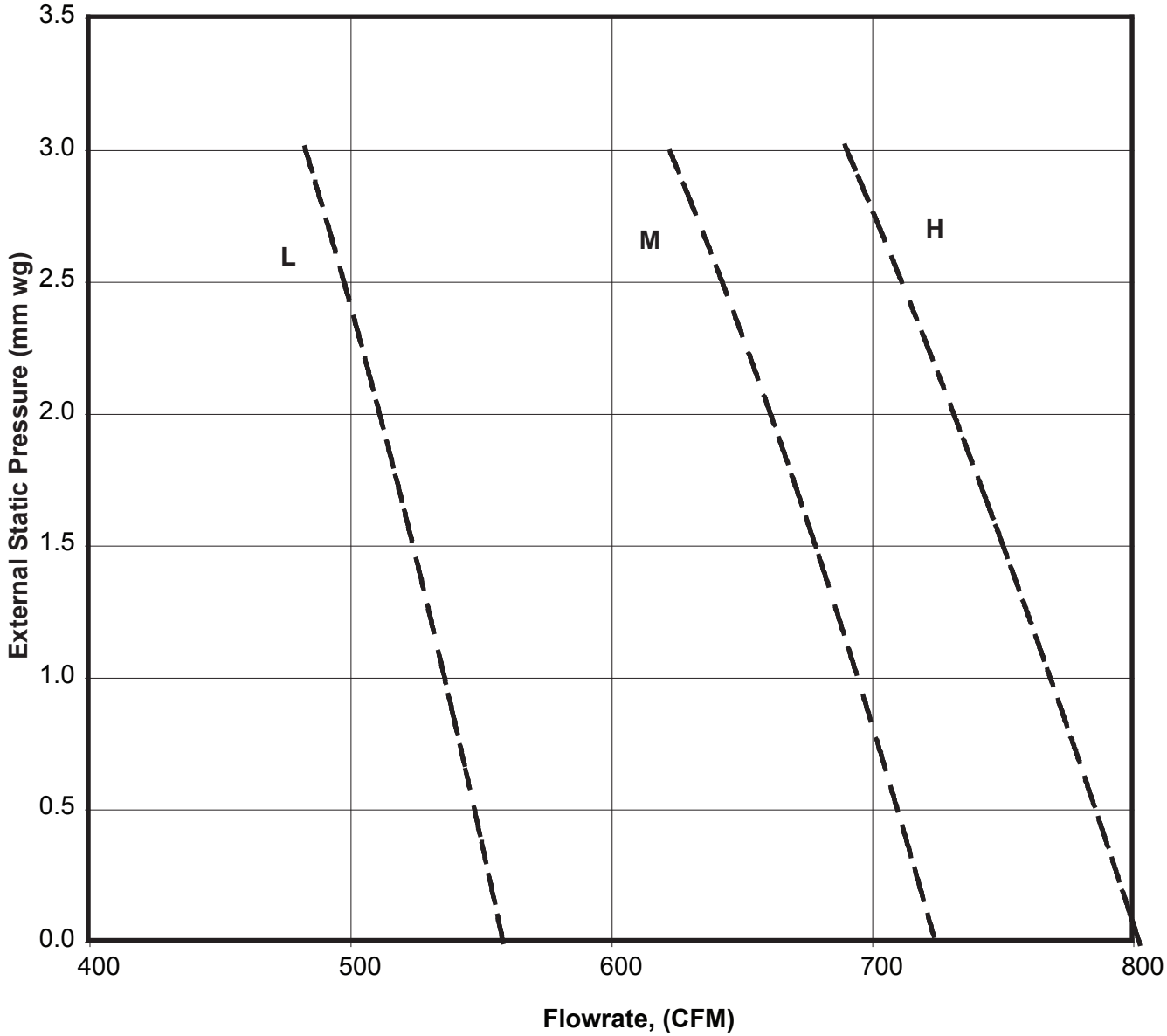

A5CC28C/CR Blower Performance Curve

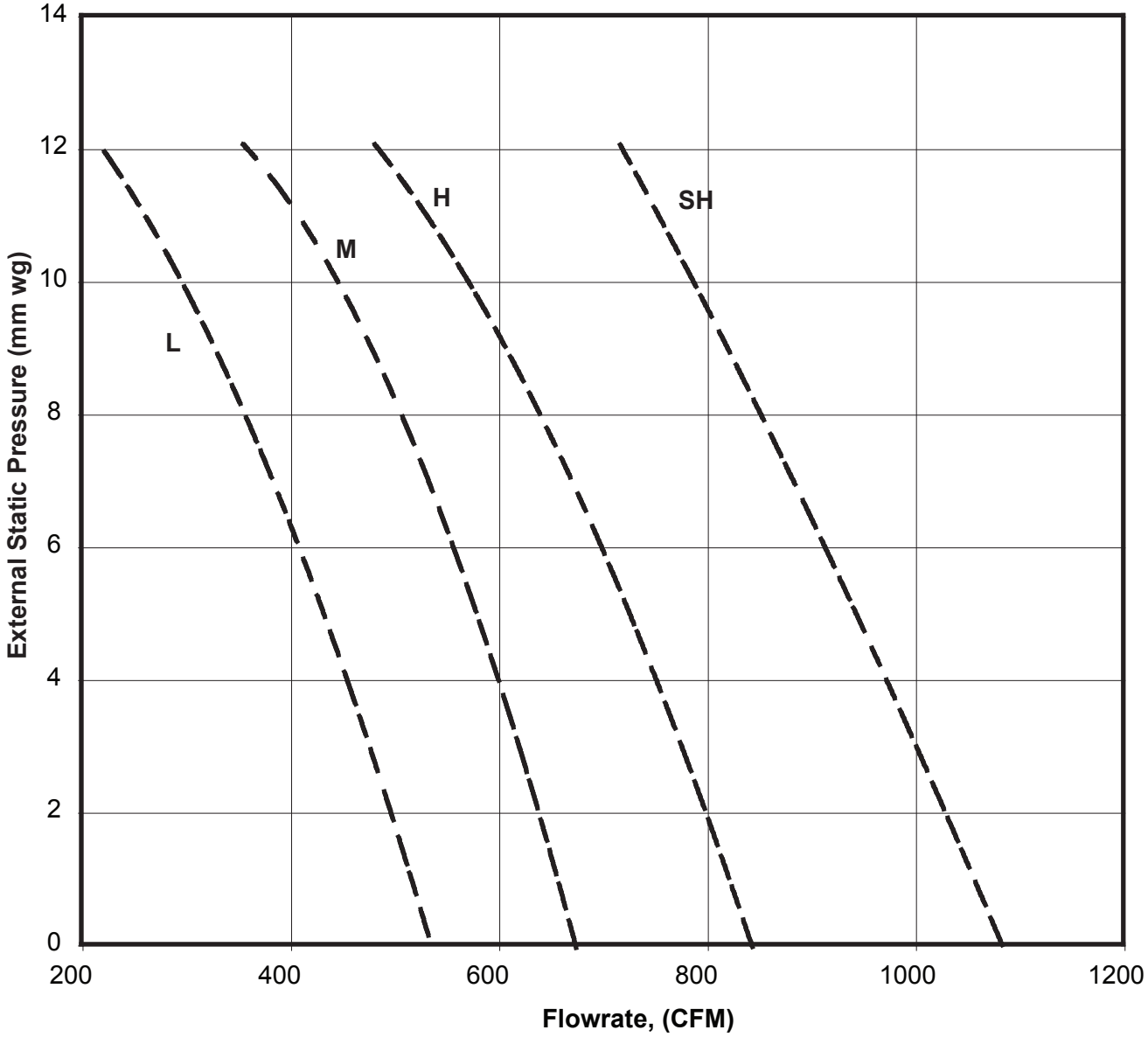

A5CC38C/CR Blower Performance Curve

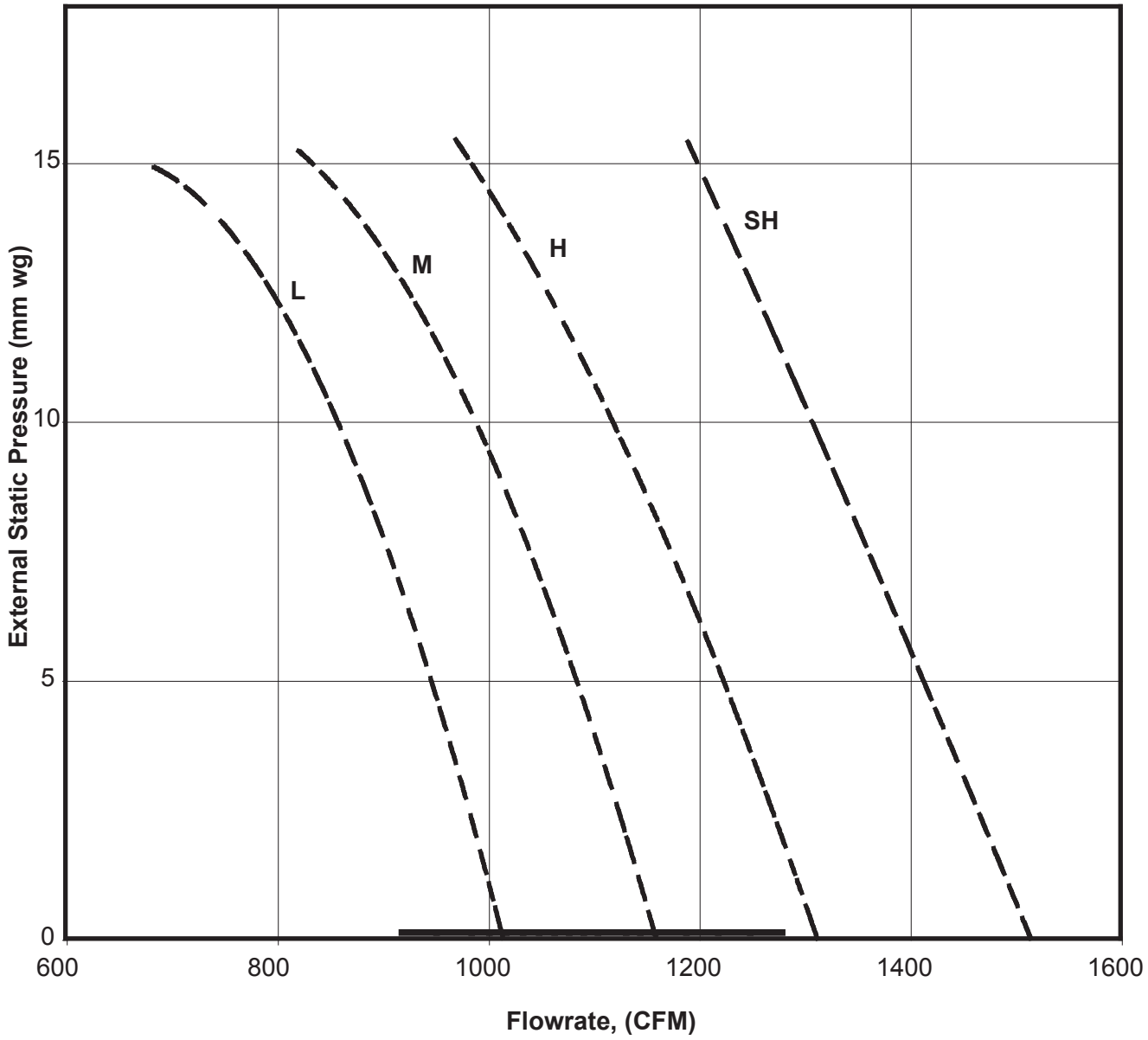

A5CC50C/CR Blower Performance Curve

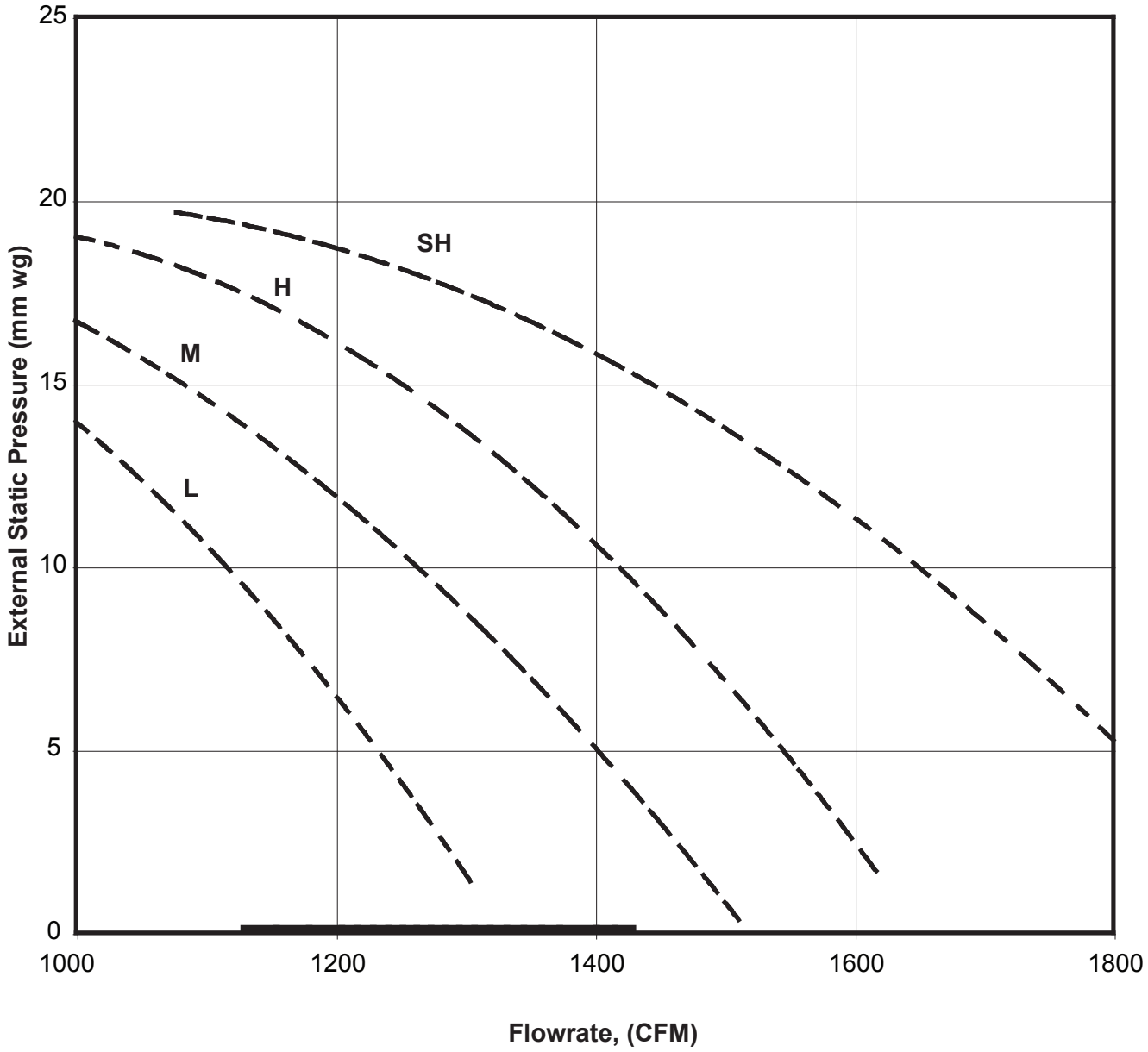

A5CC60C/CR Blower Performance Curve

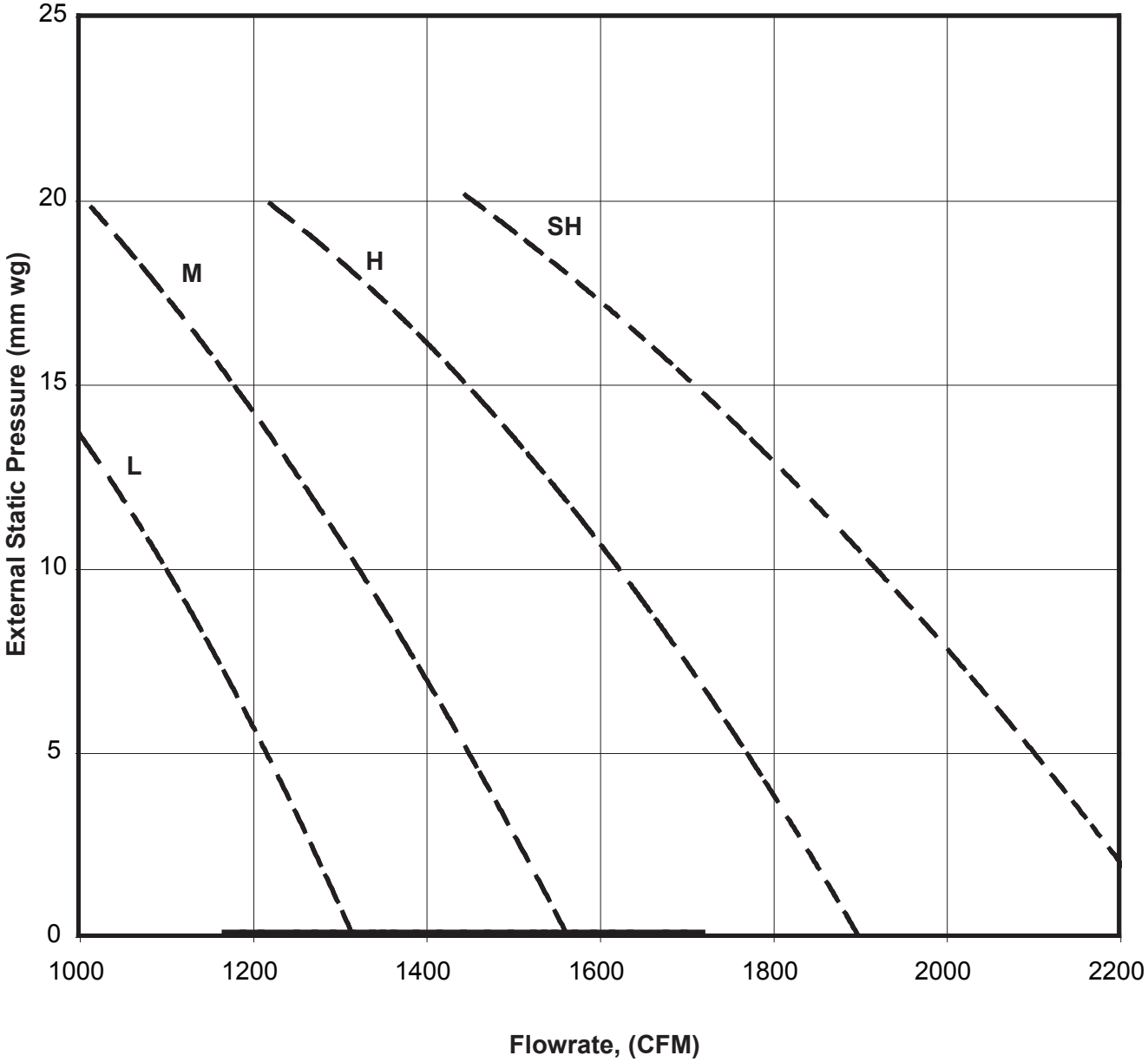

FAN PERFORMANCE CURVE
ACC 10C/CR
(High Static Motor)

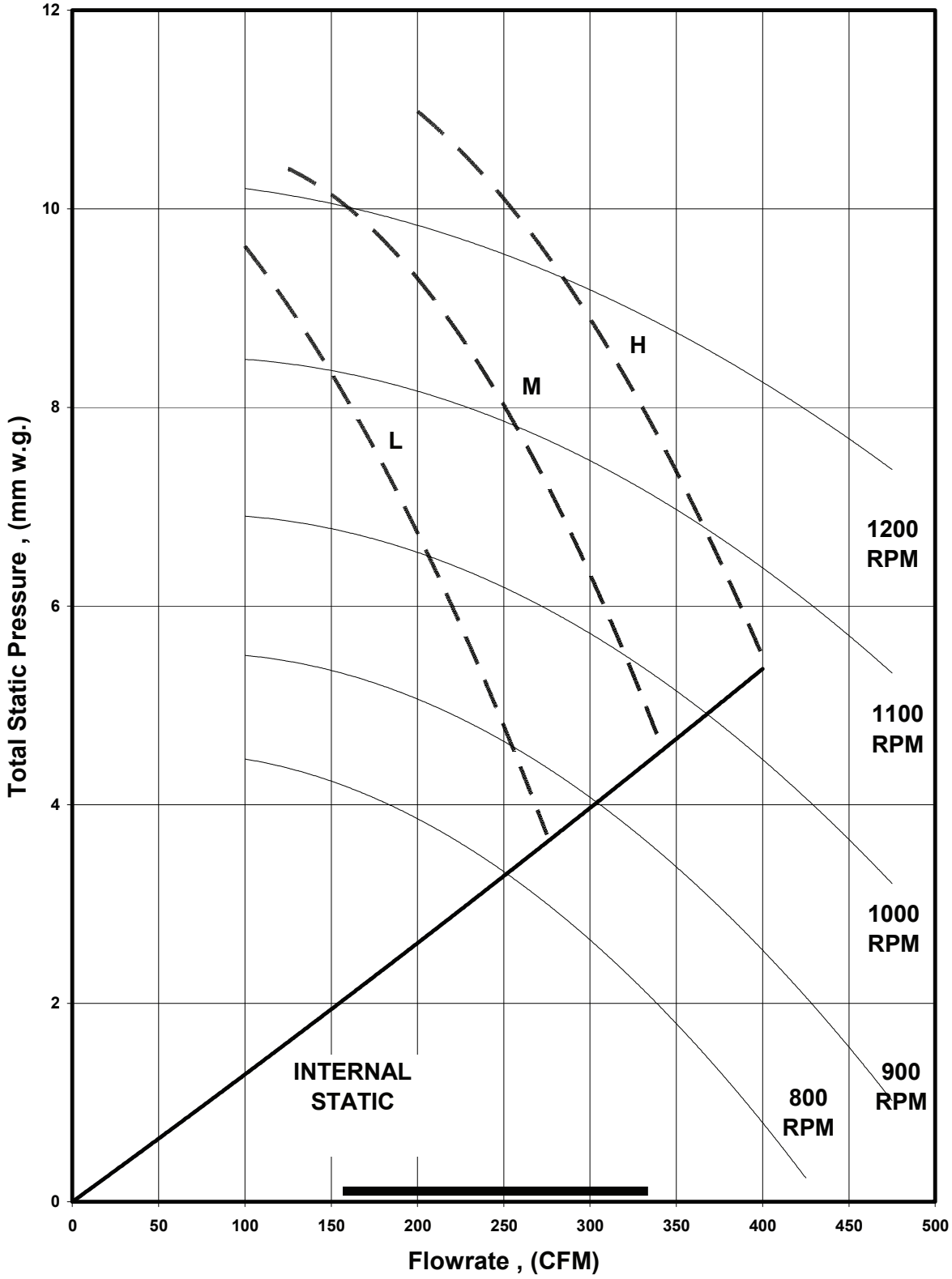

FAN PERFORMANCE CURVE
ACC 15C/CR
(High Static Motor)

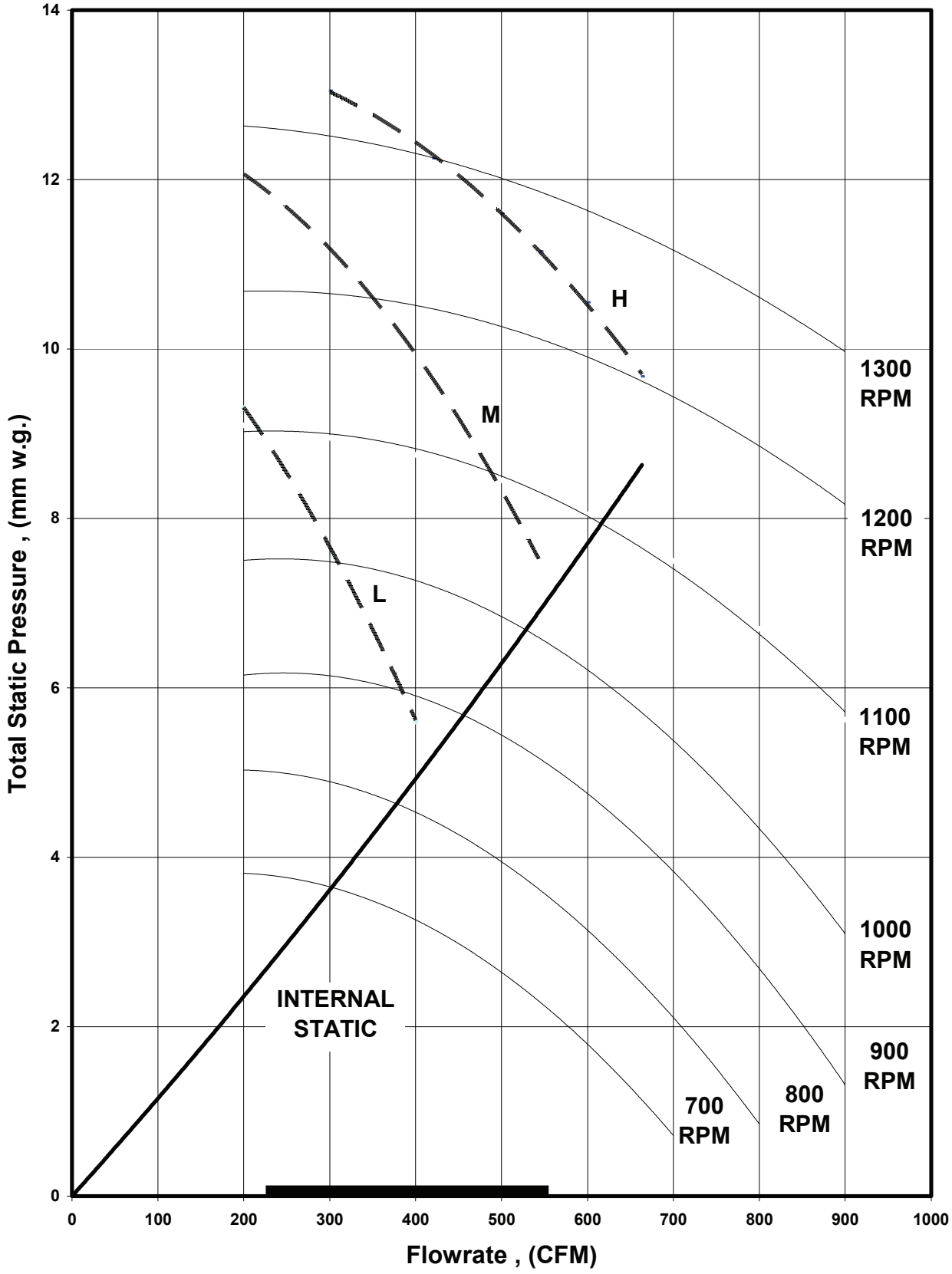

FAN PERFORMANCE CURVE
ACC 20C/CR
(High Static Motor)

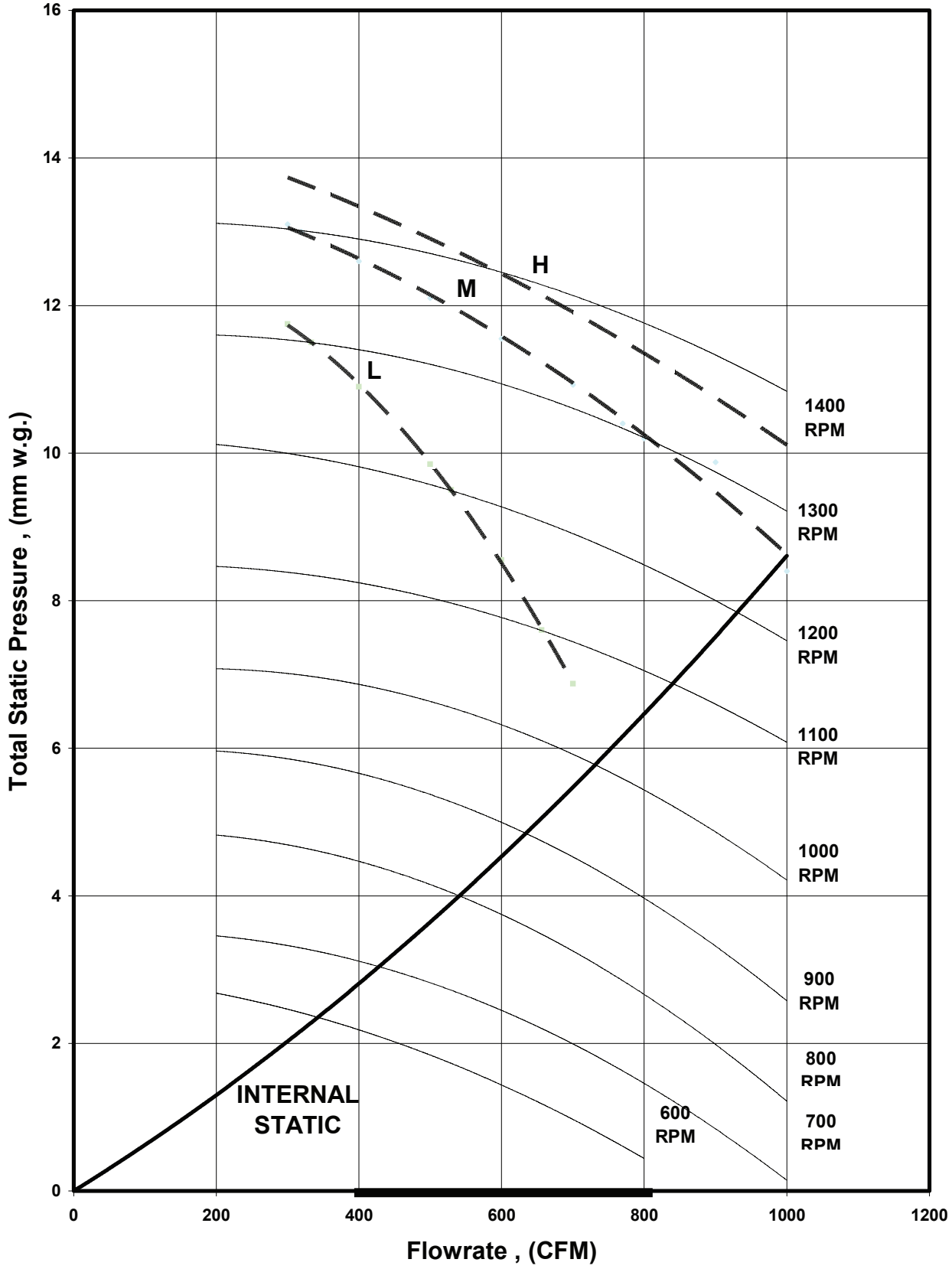

FAN PERFORMANCE CURVE
ACC 25C/CR
(High Static Motor)

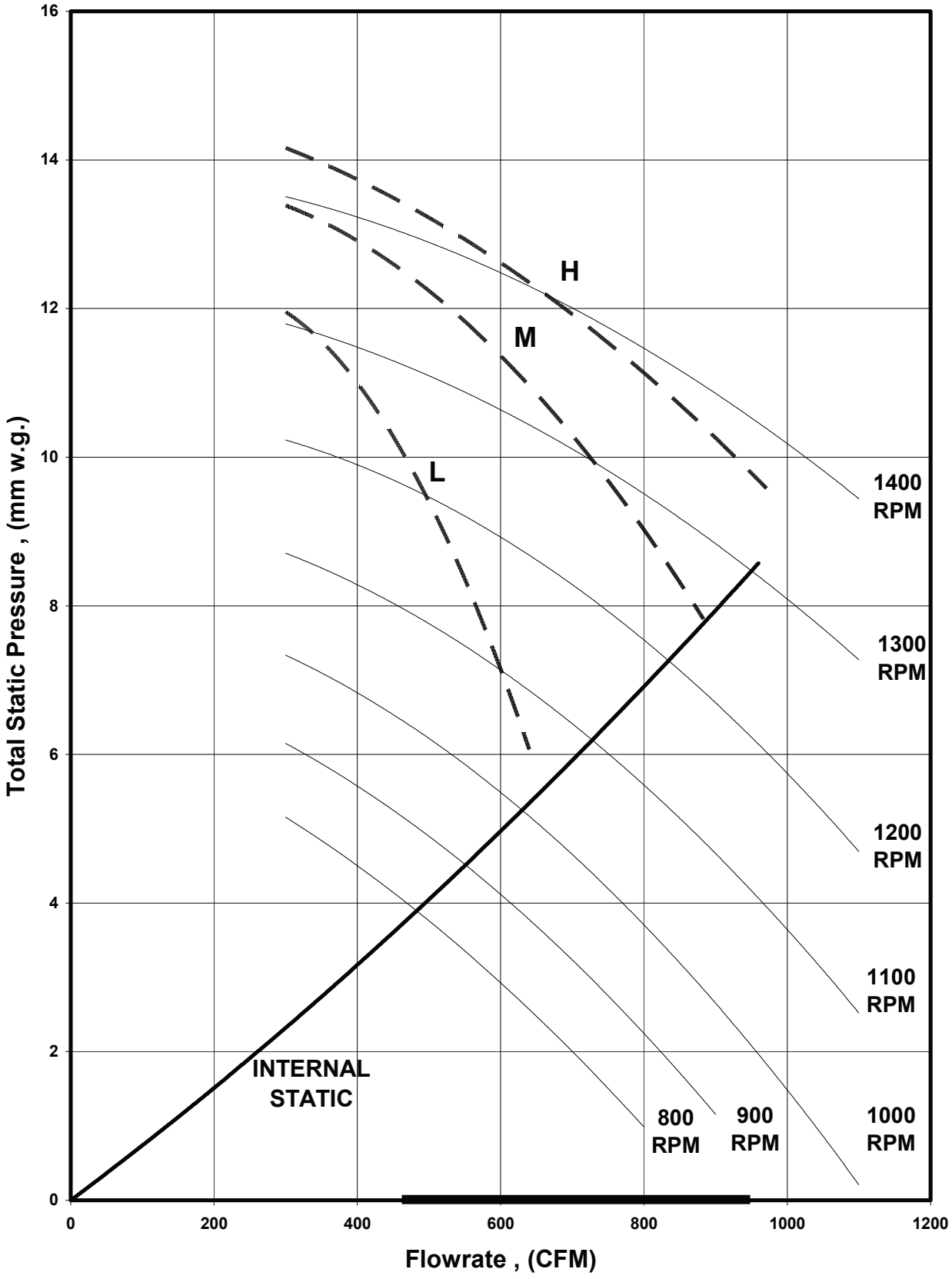

FAN PERFORMANCE CURVE
ACC 28C/CR
(High Static Motor)

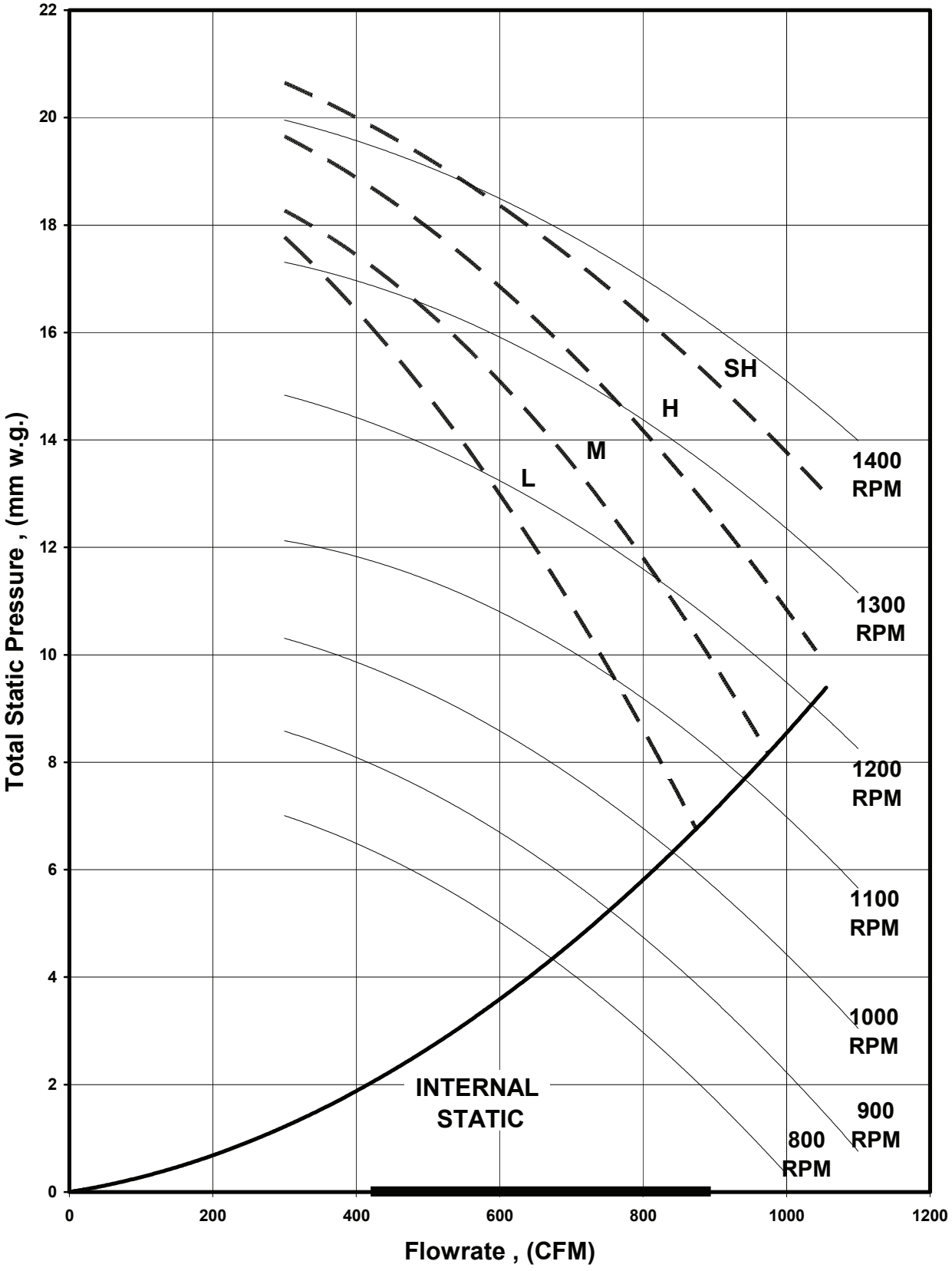

FAN PERFORMANCE CURVE
ACC 30C/CR
(High Static Motor)

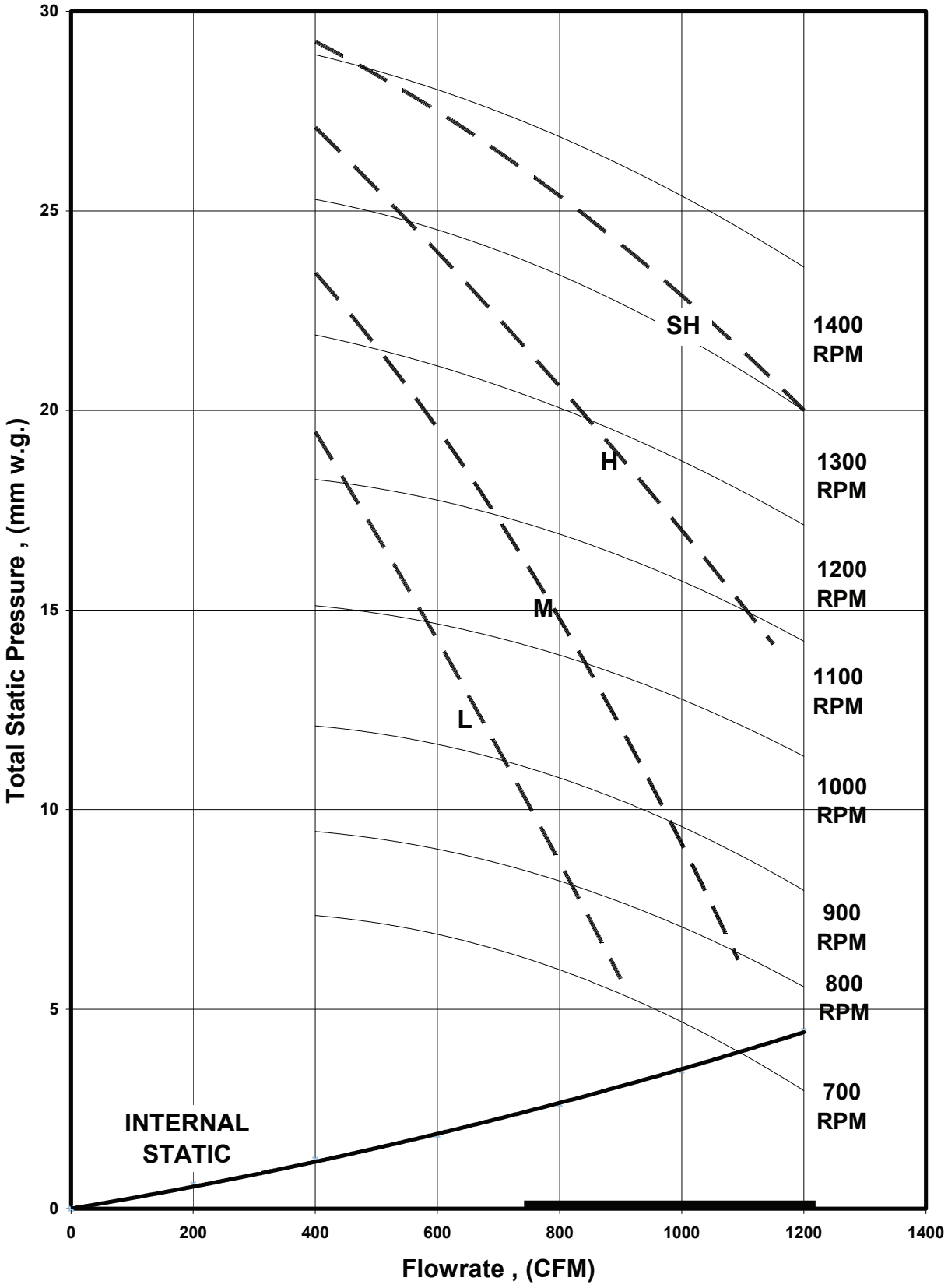

FAN PERFORMANCE CURVE
ACC 38C/CR
(High Static Motor)

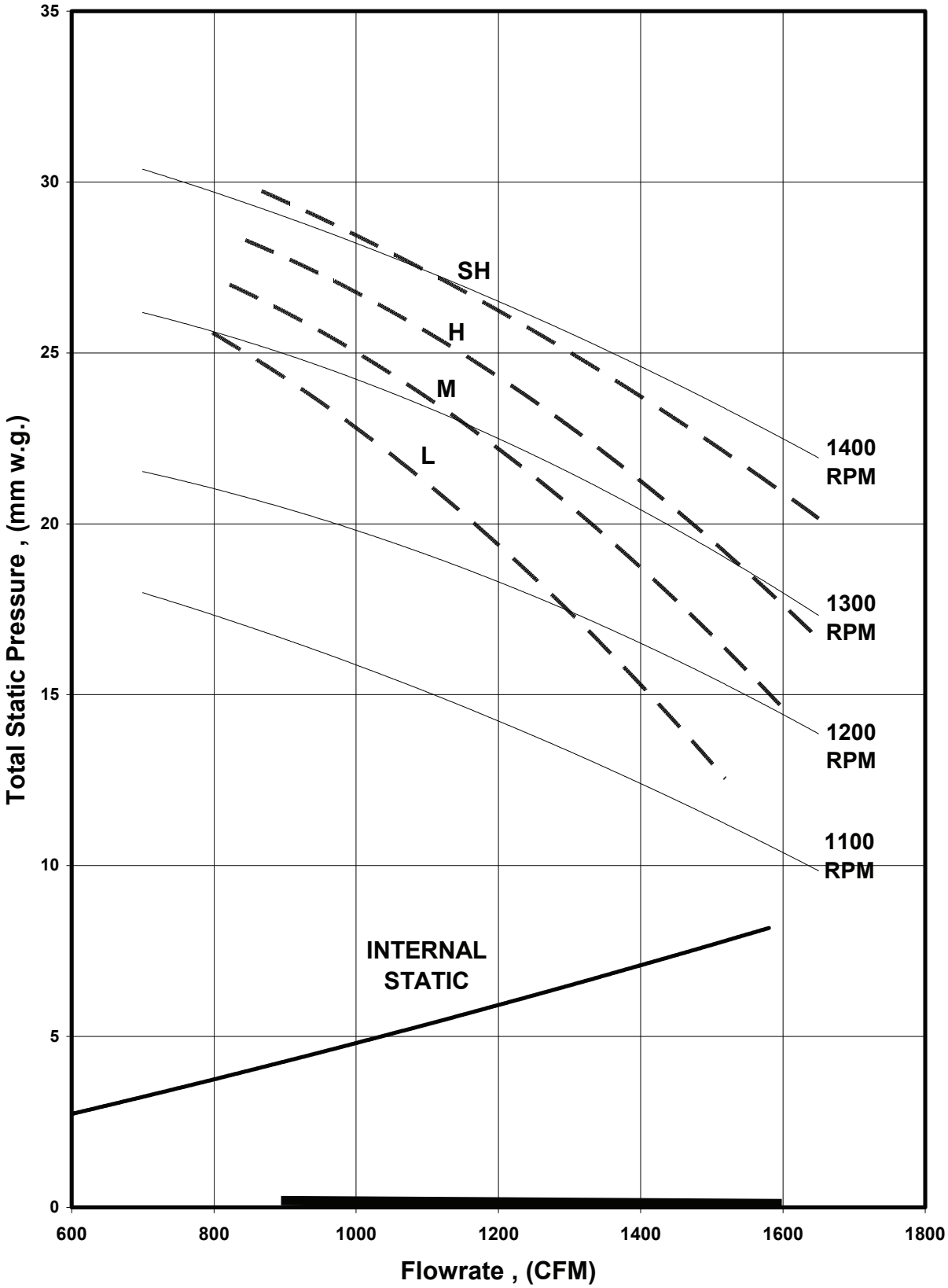

FAN PERFORMANCE CURVE
ACC 40C/CR
(High Static Motor)

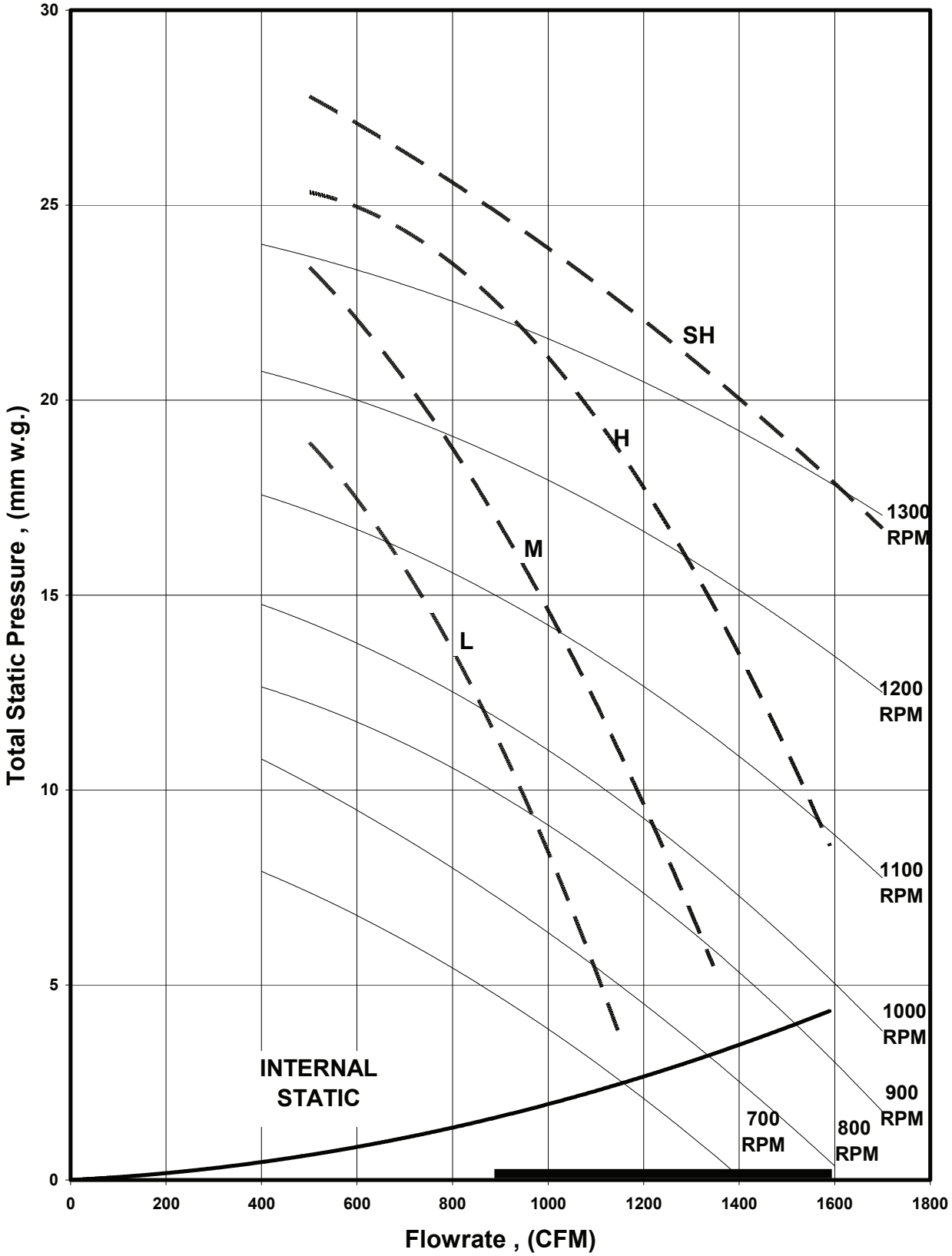

FAN PERFORMANCE CURVE
ACC 50C/CR
(High Static Motor)

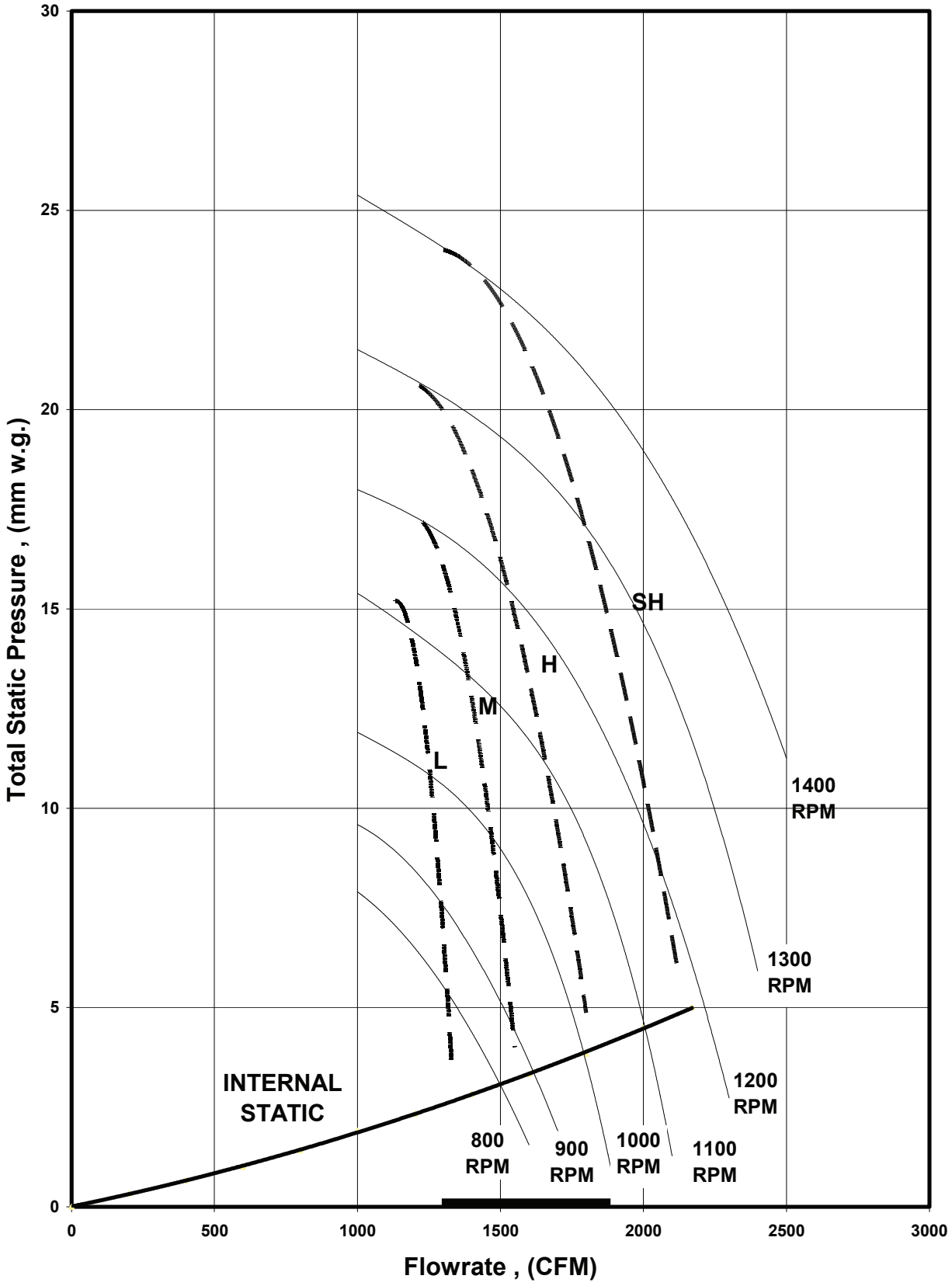

FAN PERFORMANCE CURVE
ACC 60C/CR
(High Static Motor)

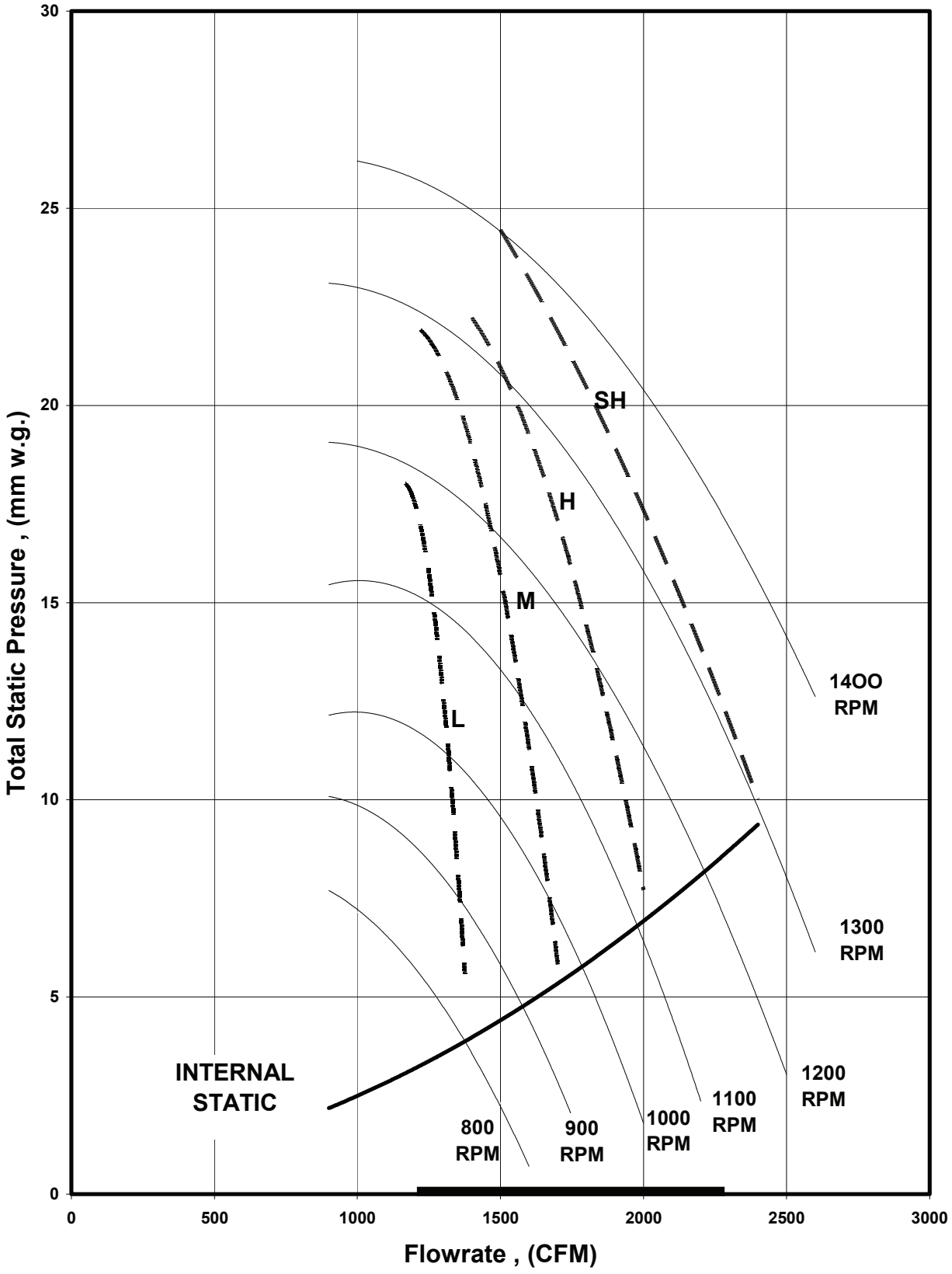

ACC 10C/CR Blower Performance Curve
(Low Static)

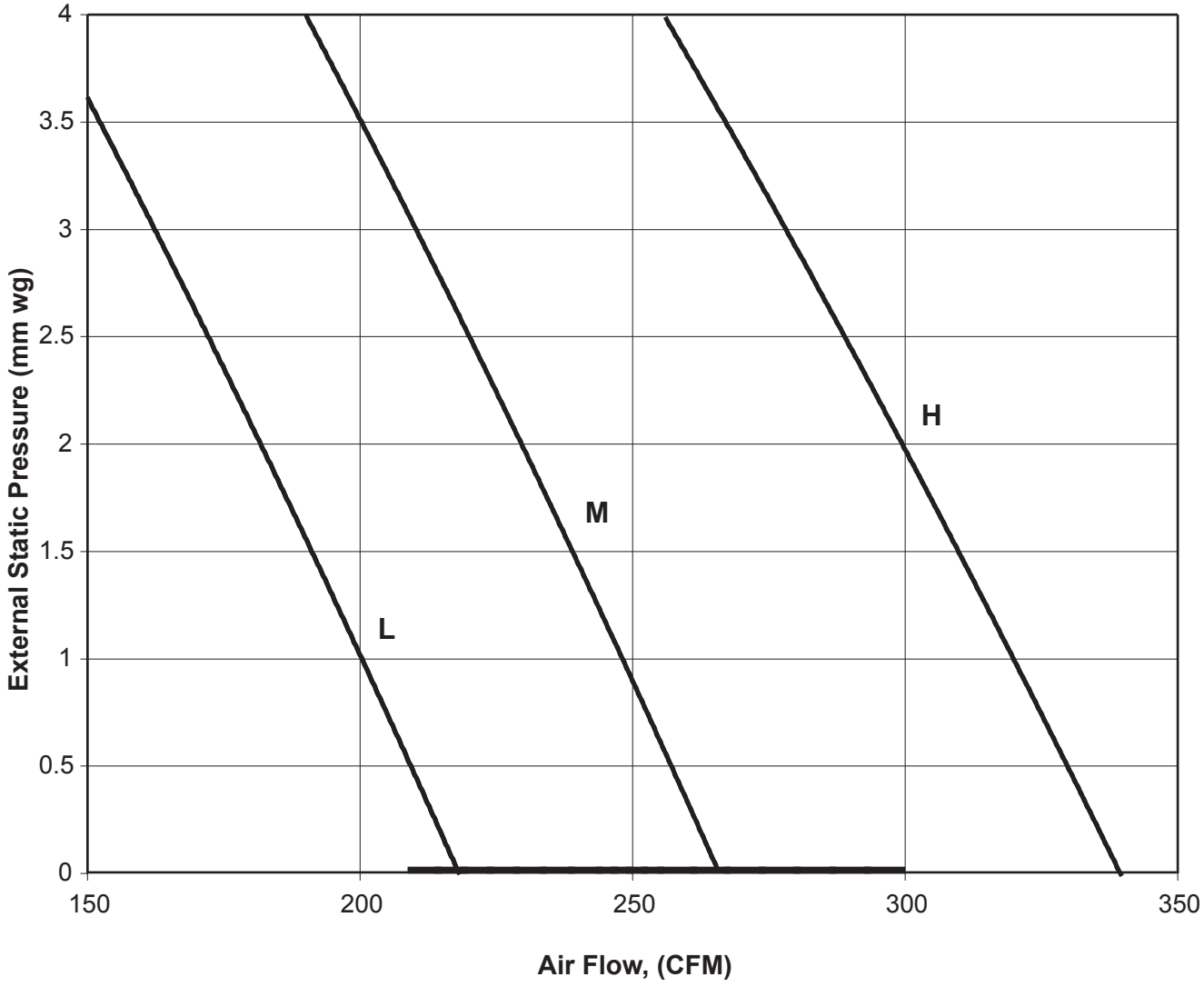

ACC 15C/CR Blower Performance Curve
(Low Static)

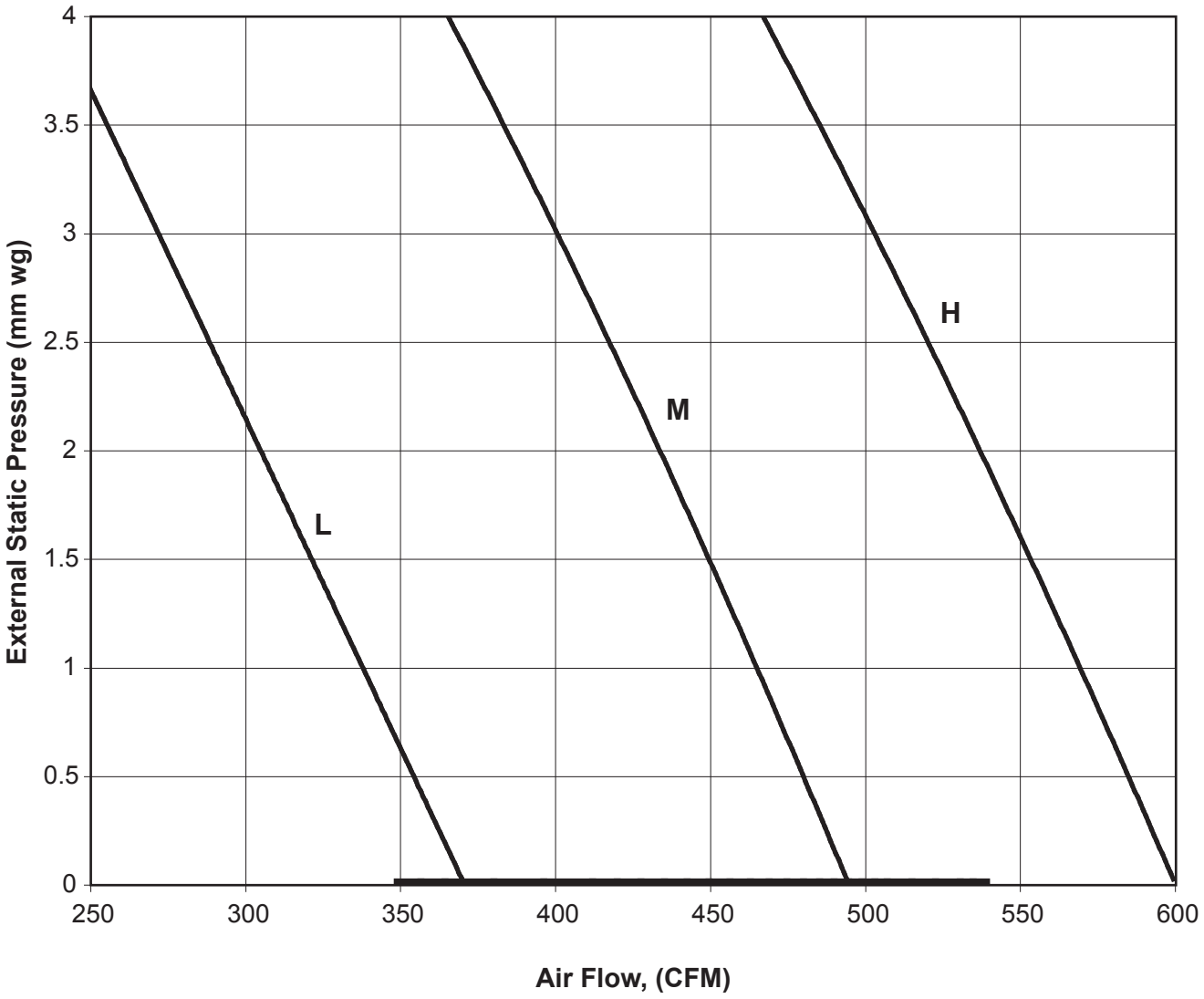

ACC 20C/CR Blower Performance Curve
(Low Static)

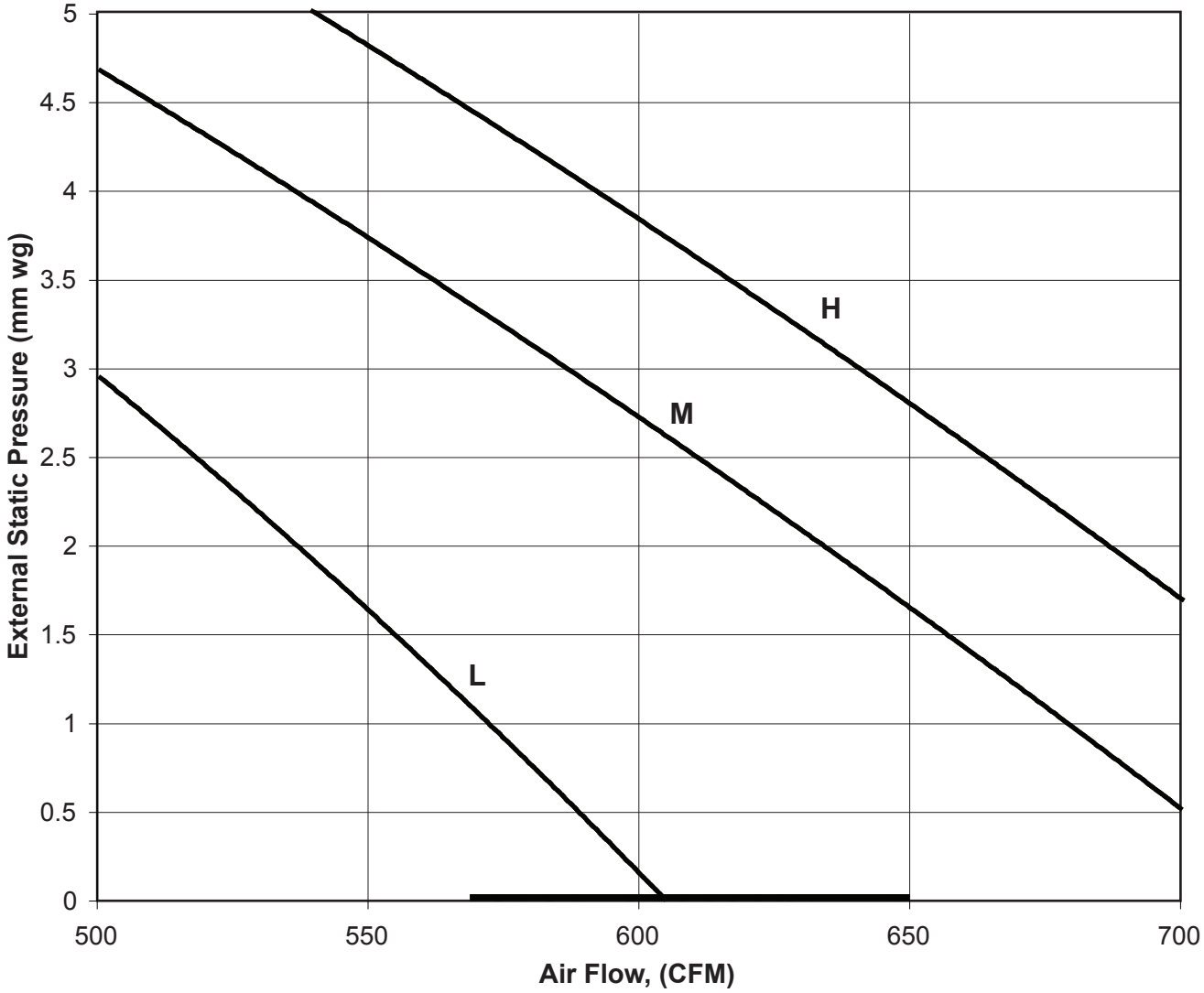

ACC 25C/CR Blower Performance Curve
(Low Static)

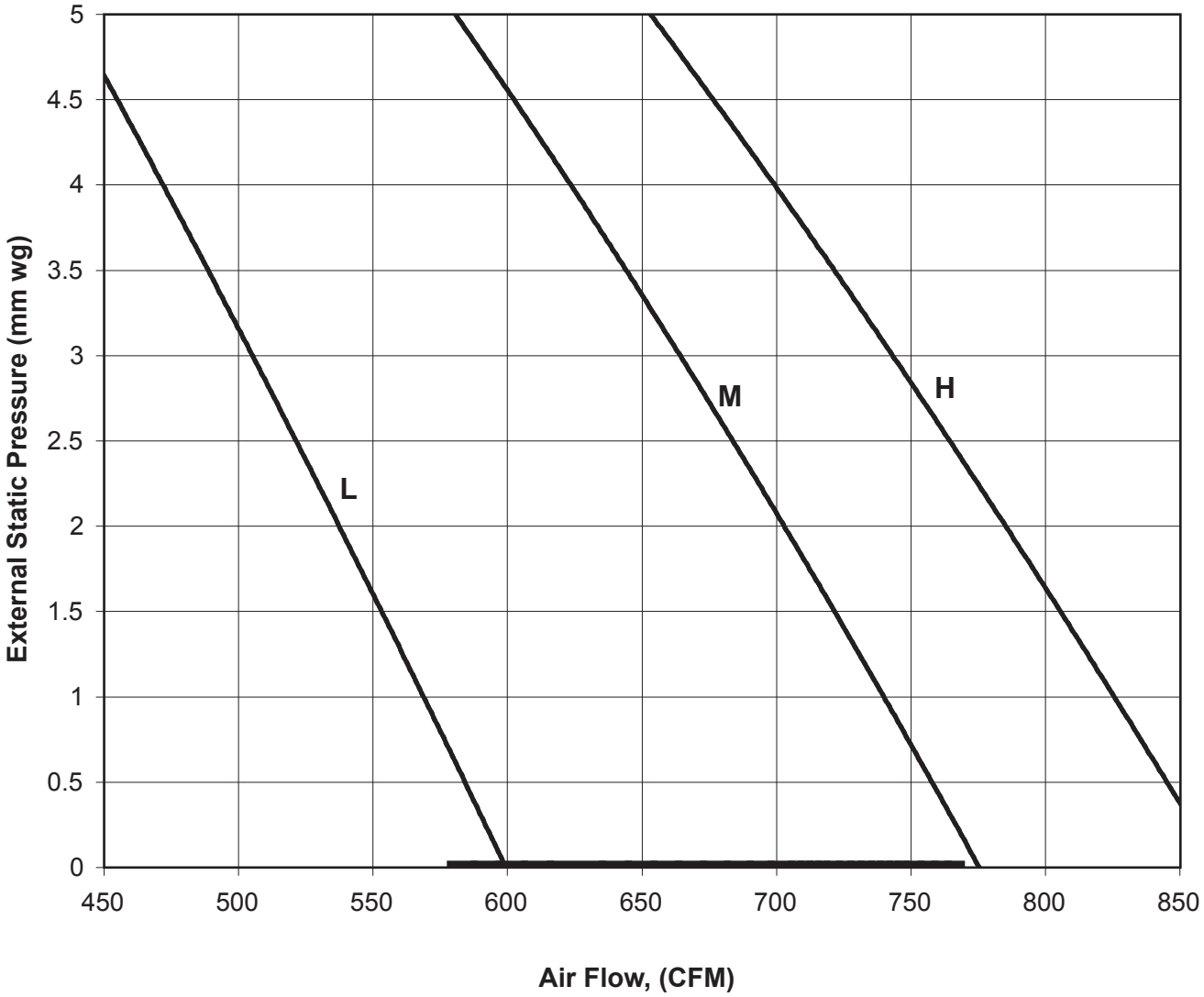

ACC 30C/CR Blower Performance Curve
(Low Static)

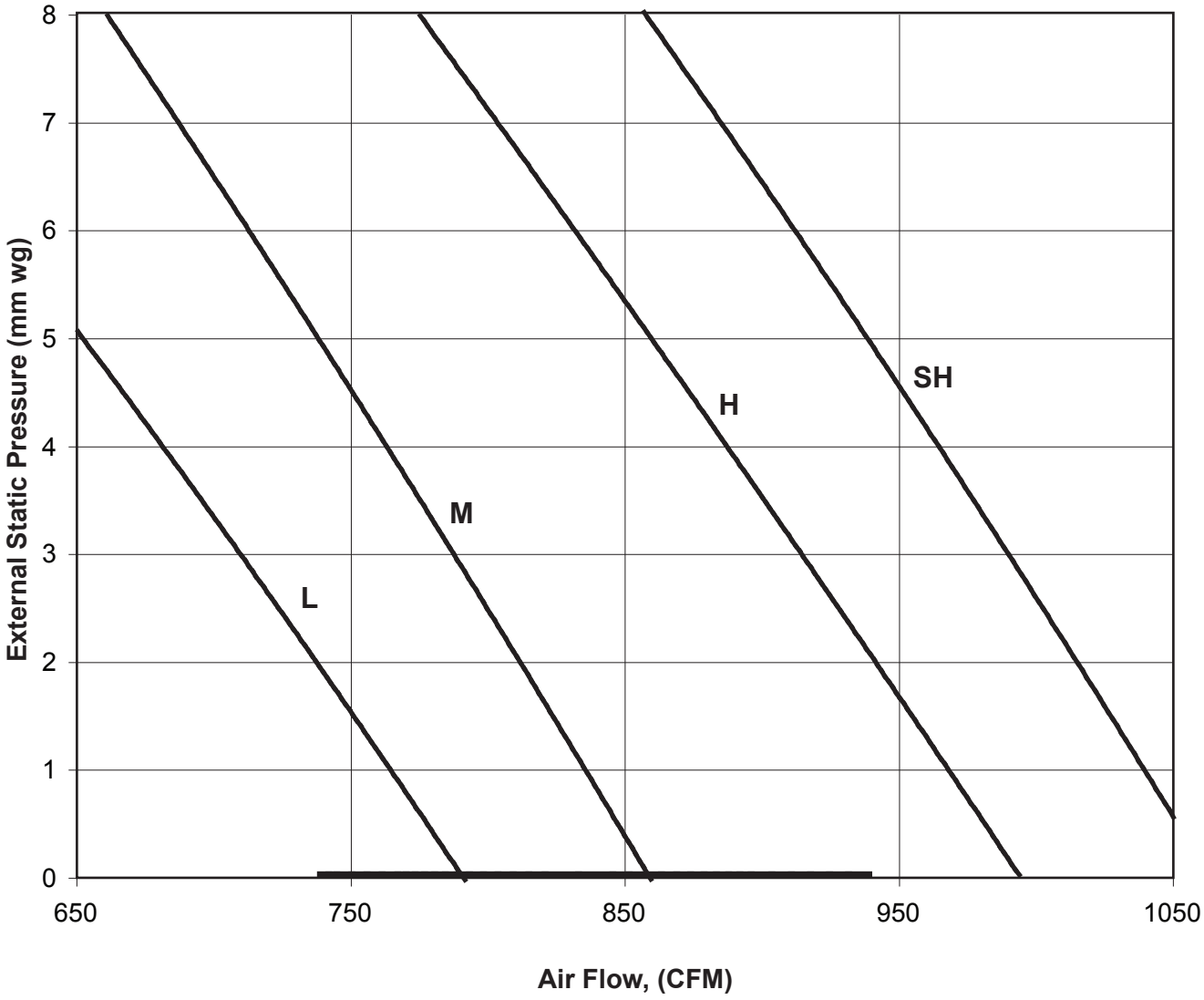

ACC 40C/CR Blower Performance Curve
(Low Static)

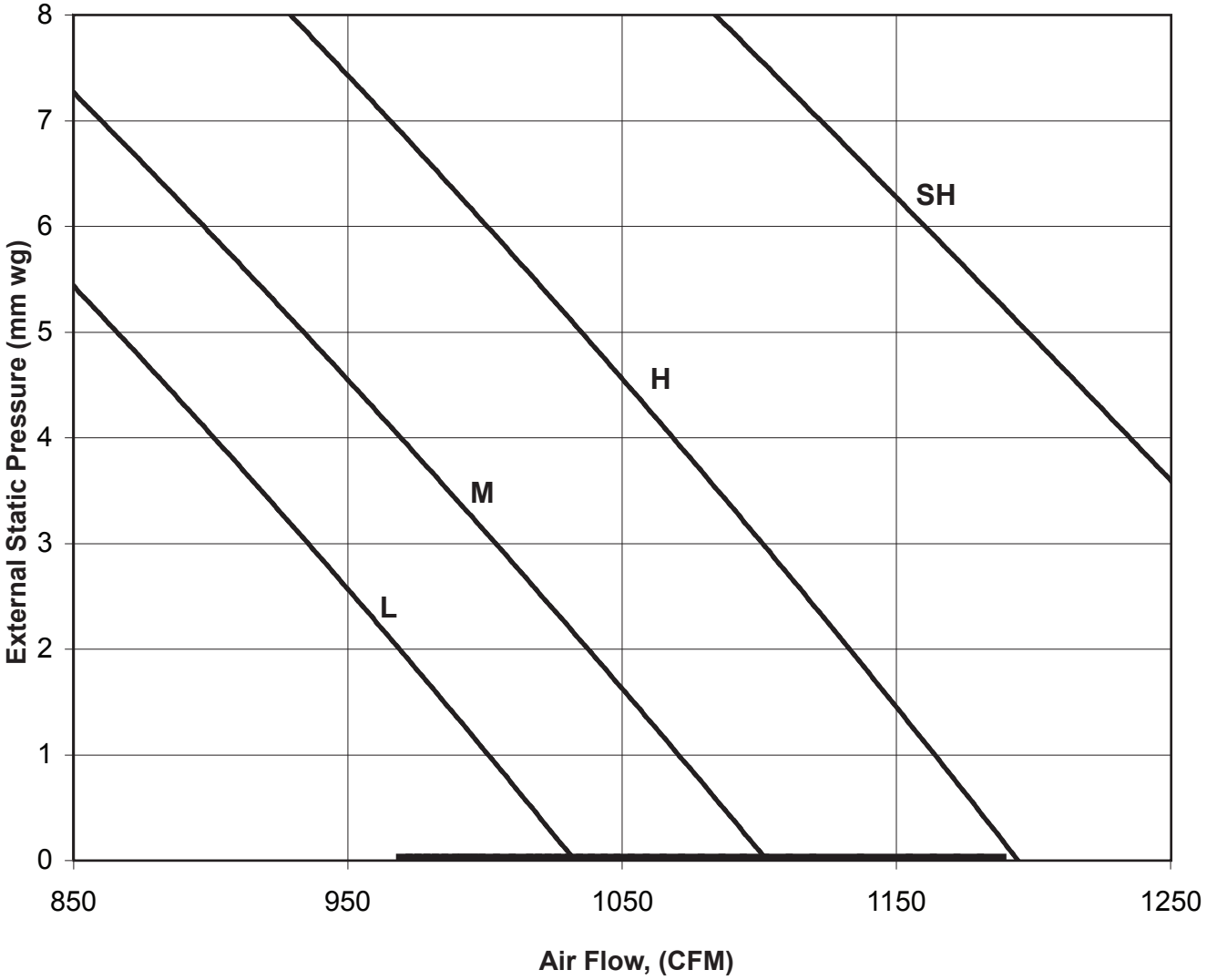

ACC 50C/CR Blower Performance Curve
(Low Static)

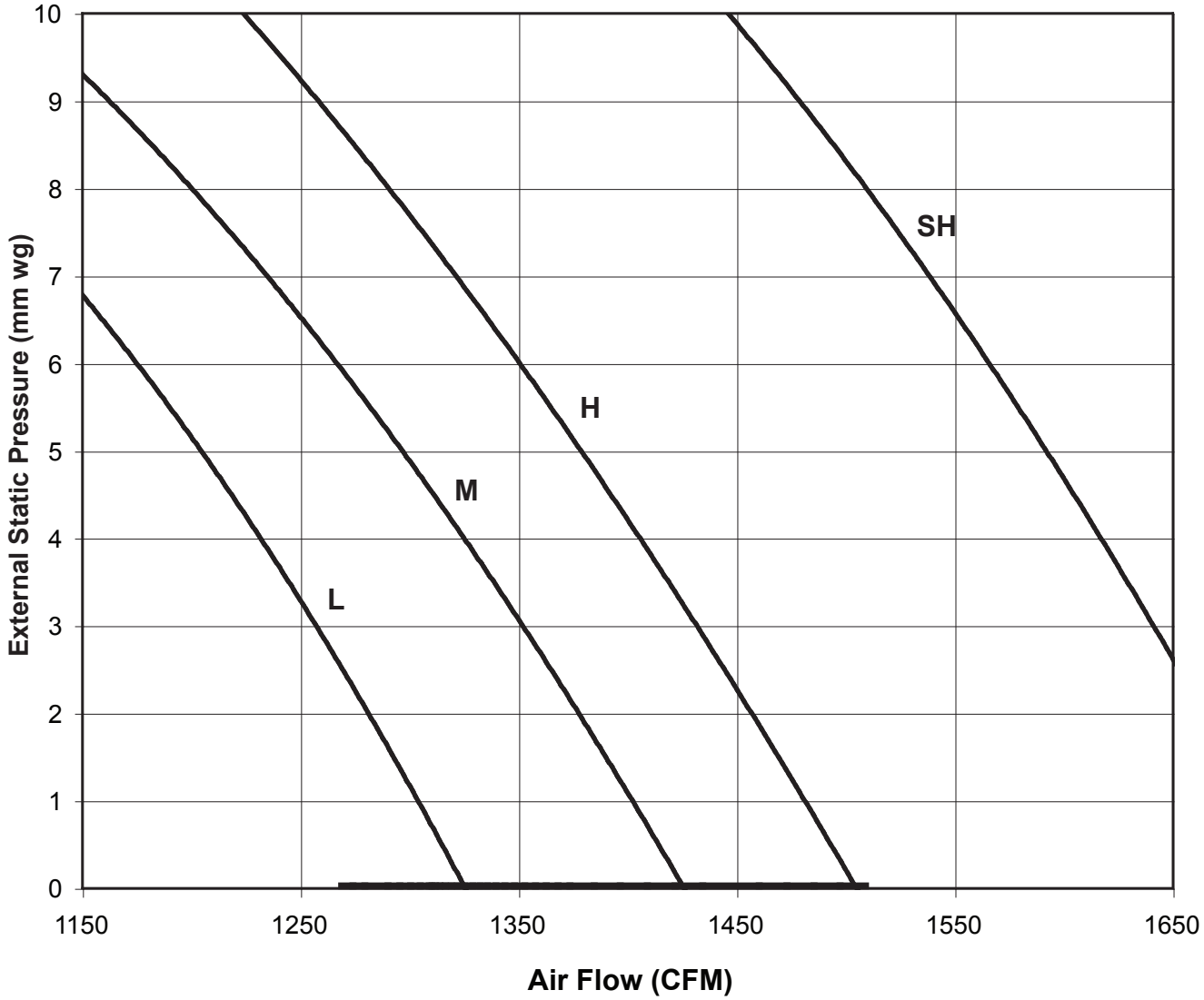

ACC 60C/CR Blower Performance Curve
(Low Static)

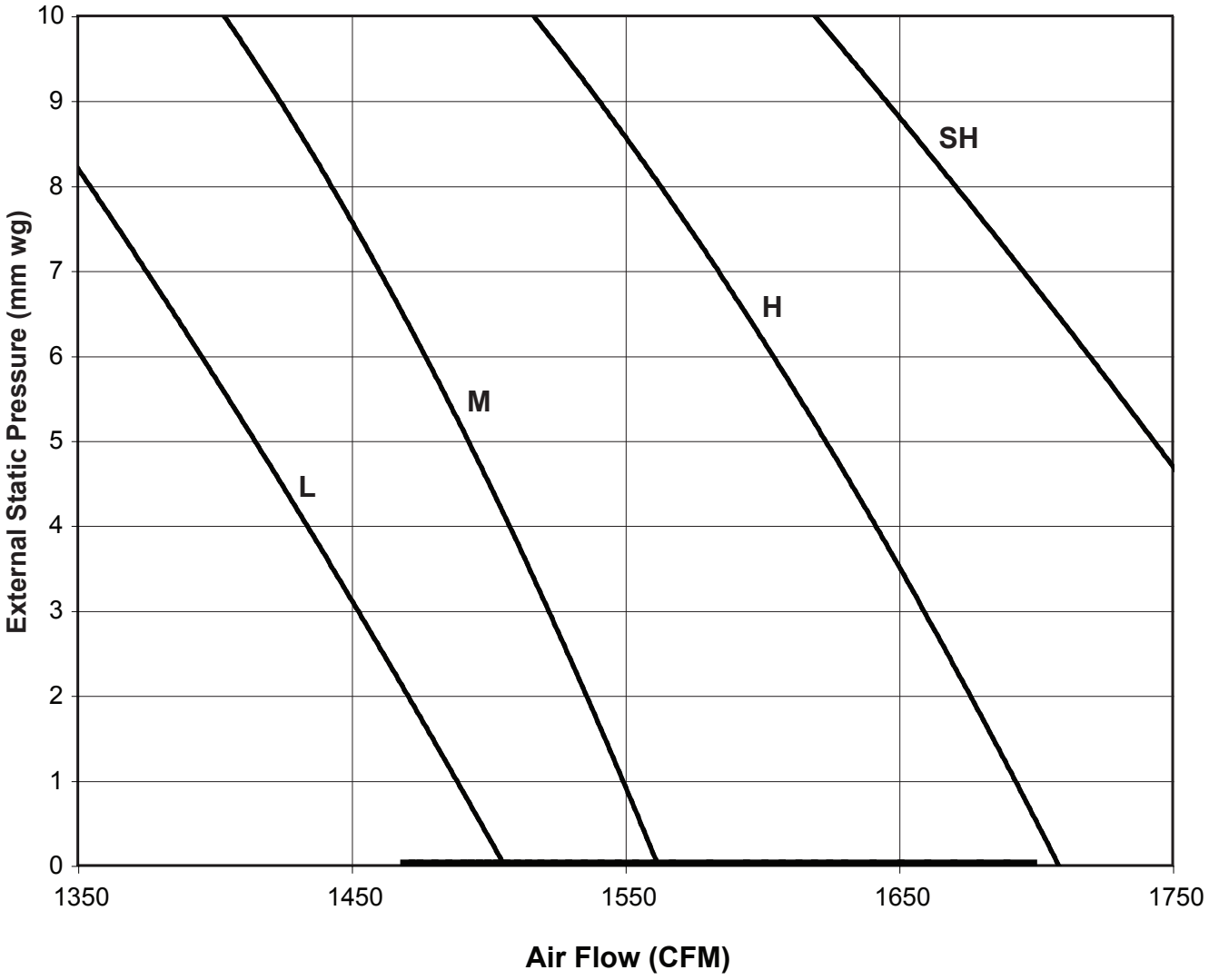

6. ENGINEERING AND PHYSICAL DATA

General Data - Cooling Only (R22)

MODEL		INDOOR UNIT			ACC10C	ACC15C
		OUTDOOR UNIT			ALC10C	ALC15C
NOMINAL CAPACITY				Btu/h	9500	12300
				W	2780	3600
NOMINAL TOTAL INPUT POWER				W	900	1267
NOMINAL RUNNING CURRENT				A	4.0	5.7
POWER SOURCE				V/Ph/Hz	220 - 240 / 1 / 50	220 - 240 / 1 / 50
EER				W/W	3.17	2.94
REFRIGERANT TYPE					R22	
REFRIGERANT CONTROL (EXPANSION DEVICE)					OUTDOOR CAP. TUBE	
INDOOR UNIT	CONTROL	AIR DISCHARGE			DUCTED	
		OPERATION			SLM WIRED HANDSET	
	AIR FLOW	HIGH		l/s / CFM	142 / 300	241 / 510
		MEDIUM		l/s / CFM	123 / 260	208 / 440
		LOW		l/s / CFM	104 / 220	170 / 360
	EXTERNAL STATIC PRESSURE (H/M/L)			Pa (in.wg.)	49 / 39 / 29 (0.2 / 0.2 / 0.1)	49 / 39 / 20 (0.2 / 0.2 / 0.1)
	SOUND PRESSURE LEVEL (H/M/L)			dBA	33 / 30 / 26	37 / 34 / 29
	UNIT DIMENSION	HEIGHT		mm/in	261 / 10.3	261 / 10.3
		WIDTH		mm/in	765 / 30.1	905 / 35.6
		DEPTH		mm/in	411 / 16.2	411 / 16.2
	PACKING DIMENSION	HEIGHT		mm/in	376 / 14.8	376 / 14.8
		WIDTH		mm/in	951 / 37.4	1091 / 43.0
		DEPTH		mm/in	541 / 21.3	541 / 21.3
	WEIGHT			kg/lb	17 / 38	21 / 46
	CONDENSATE DRAIN SIZE			mm/in	19.1 / 3/4	
OUTDOOR UNIT	AIR FLOW			l/s / CFM	396 / 840	453 / 960
	SOUND PRESSURE LEVEL			dBA	46	49
	UNIT DIMENSION	HEIGHT		mm/in	540 / 21.3	
		WIDTH		mm/in	700 / 27.6	
		DEPTH		mm/in	250 / 9.8	
	PACKING DIMENSION	HEIGHT		mm/in	620 / 24.4	
		WIDTH		mm/in	810 / 31.9	
		DEPTH		mm/in	330 / 13.0	
	UNIT WEIGHT			kg/lb	32 / 71	
	PIPE CONNECTION	TYPE			FLARE VALVE	
		SIZE	LIQUID	mm/in	6.4 / 1/4	6.4 / 1/4
			GAS	mm/in	9.5 / 3/8	12.7 / 1/2
REFRIGERANT CHARGE				kg/lb	0.63 / 1.39	0.60 / 1.32

1) ALL SPECIFICATIONS ARE SUBJECTED TO CHANGE BY THE MANUFACTURER WITHOUT PRIOR NOTICE.
2) ALL UNITS ARE BEING TESTED AND COMPLY TO ISO 13253.
3) NOMINAL COOLING AND HEATING CAPACITY ARE BASED ON THE CONDITIONS BELOW :
COOLING - 27°C DB / 19°C WB INDOOR AND 35°C DB / 24°C WB OUTDOOR
4) EER/COP CALCULATION IS BASED ON EFFECTIVE POWER INPUT AS PER ISO 13253.

General Data - Cooling Only (R22)

MODEL		INDOOR UNIT			ACC 20C	
		OUTDOOR UNIT			ALC 18C	ALC 20C
NOMINAL CAPACITY				Btu/h	18000	19000
				W	5280	5570
NOMINAL TOTAL INPUT POWER				W	1910	1895
NOMINAL RUNNING CURRENT				A	8.5	8.3
POWER SOURCE				V/Ph/Hz	220 - 240 / 1 / 50	220 - 240 / 1 / 50
EER				W/W	2.87	3.05
REFRIGERANT TYPE					R22	
REFRIGERANT CONTROL (EXPANSION DEVICE)					OUTDOOR CAP. TUBE	
INDOOR UNIT	CONTROL	AIR DISCHARGE			DUCTED	
		OPERATION			SLM WIRED HANDSET	
	AIR FLOW	HIGH		l/s / CFM	316 / 670	
		MEDIUM		l/s / CFM	302 / 640	
		LOW		l/s / CFM	278 / 590	
	EXTERNAL STATIC PRESSURE (H/M/L)			Pa (in.wg.)	69 / 65 / 42 (0.28 / 0.26 / 0.17)	
	SOUND PRESSURE LEVEL (H/M/L)			dBA	38 / 36 / 34	
	UNIT DIMENSION	HEIGHT		mm/in	261 / 10.3	
		WIDTH		mm/in	1065 / 41.9	
		DEPTH		mm/in	411 / 16.2	
	PACKING DIMENSION	HEIGHT		mm/in	376 / 14.8	
		WIDTH		mm/in	1251 / 49.3	
		DEPTH		mm/in	541 / 21.3	
	WEIGHT			kg/lb	22 / 49	
	CONDENSATE DRAIN SIZE			mm/in	19.1 / 3/4	
OUTDOOR UNIT	AIR FLOW			l/s / CFM	614 / 1300	
	SOUND PRESSURE LEVEL			dBA	51	
	UNIT DIMENSION	HEIGHT		mm/in	654 / 25.5	
		WIDTH		mm/in	855 / 33.7	
		DEPTH		mm/in	328 / 12.9	
	PACKING DIMENSION	HEIGHT		mm/in	710 / 28.0	
		WIDTH		mm/in	990 / 39.0	
		DEPTH		mm/in	415 / 16.3	
	UNIT WEIGHT			kg/lb	57 / 125.7	59 / 130
	PIPE CONNECTION	TYPE			FLARE VALVE	
		SIZE	LIQUID	mm/in	6.4 / 1/4	
			GAS	mm/in	15.9 / 5/8	
REFRIGERANT CHARGE				kg/lb	1.60 / 3.53	1.35 / 2.98

1) ALL SPECIFICATIONS ARE SUBJECTED TO CHANGE BY THE MANUFACTURER WITHOUT PRIOR NOTICE.
2) ALL UNITS ARE BEING TESTED AND COMPLY TO ISO 13253.
3) NOMINAL COOLING AND HEATING CAPACITY ARE BASED ON THE CONDITIONS BELOW :
COOLING - 27°C DB / 19°C WB INDOOR AND 35°C DB / 24°C WB OUTDOOR
4) EER/COP CALCULATION IS BASED ON EFFECTIVE POWER INPUT AS PER ISO 13253.

General Data - Cooling Only (R22)

MODEL		INDOOR UNIT		ACC 25C
		OUTDOOR UNIT		ALC 25C
NOMINAL CAPACITY			Btu/h	23500
			W	6890
NOMINAL TOTAL INPUT POWER			W	2616
NOMINAL RUNNING CURRENT			A	11.7
POWER SOURCE			V/Ph/Hz	220 - 240 / 1 / 50
EER			W/W	2.69
REFRIGERANT TYPE				R22
REFRIGERANT CONTROL (EXPANSION DEVICE)				OUTDOOR CAP. TUBE
INDOOR UNIT	CONTROL	AIR DISCHARGE		DUCTED
		OPERATION		SLM WIRED HANDSET
	AIR FLOW	HIGH	l/s / CFM	382 / 810
		MEDIUM	l/s / CFM	59 / 760
		LOW	l/s / CFM	288 / 610
	EXTERNAL STATIC PRESSURE (H/M/L)		Pa (in.wg.)	41 / 31 / 18 (0.16 / 0.12 / 0.07)
	SOUND PRESSURE LEVEL (H/M/L)		dBA	40 / 39 / 36
	UNIT DIMENSION	HEIGHT	mm/in	261 / 10.3
		WIDTH	mm/in	1200 / 47.2
		DEPTH	mm/in	411 / 16.2
	PACKING DIMENSION	HEIGHT	mm/in	376 / 14.8
		WIDTH	mm/in	1386 / 54.6
		DEPTH	mm/in	541 / 21.3
	WEIGHT		kg/lb	25 / 55
	CONDENSATE DRAIN SIZE		mm/in	19.1 / 3/4
OUTDOOR UNIT	AIR FLOW		l/s / CFM	755 / 1600
	SOUND PRESSURE LEVEL		dBA	52
	UNIT DIMENSION	HEIGHT	mm/in	756 / 29.8
		WIDTH	mm/in	855 / 33.7
		DEPTH	mm/in	328 / 12.9
	PACKING DIMENSION	HEIGHT	mm/in	810 / 31.9
		WIDTH	mm/in	990 / 39.0
		DEPTH	mm/in	415 / 16.3
	UNIT WEIGHT		kg/lb	62 / 137
	PIPE CONNECTION	TYPE		FLARE VALVE
		SIZE LIQUID	mm/in	9.5 / 3/8
		SIZE GAS	mm/in	15.9 / 5/8
REFRIGERANT CHARGE			kg/lb	1.50 / 3.31

1) ALL SPECIFICATIONS ARE SUBJECTED TO CHANGE BY THE MANUFACTURER WITHOUT PRIOR NOTICE.
2) ALL UNITS ARE BEING TESTED AND COMPLY TO ISO 13253.
3) NOMINAL COOLING AND HEATING CAPACITY ARE BASED ON THE CONDITIONS BELOW :
COOLING - 27°C DB / 19°C WB INDOOR AND 35°C DB / 24°C WB OUTDOOR
4) EER/COP CALCULATION IS BASED ON EFFECTIVE POWER INPUT AS PER ISO 13253.

General Data - Cooling Only (R22)

MODEL				INDOOR UNIT	ACC 28C	
				OUTDOOR UNIT	ALC 28C	ALC ~~38C~~ 30D
NOMINAL CAPACITY - 1Ø / <3Ø>			Btu/h		27000	28000 / <28000>
			W		7910	8206 / <8206>
NOMINAL TOTAL INPUT POWER - 1Ø / <3Ø>			W		2942	2821 / <2981>
NOMINAL RUNNING CURRENT - 1Ø / <3Ø>			A		15.1	12.92 / <4.17>
POWER SOURCE - 1Ø / <3Ø>			V/Ph/Hz		220 - 240 / 1 / 50 / <380 - 415 / 3 / 50>	
EER - 1Ø / <3Ø>			W/W		2.64	3.01 / <2.85>
REFRIGERANT TYPE					R22	
REFRIGERANT CONTROL (EXPANSION DEVICE)					INDOOR CAP. TUBE	
INDOOR UNIT	CONTROL	AIR DISCHARGE			DUCTED	
		OPERATION			SLM WIRED HANDSET	
	AIR FLOW	SUPER HIGH	l/s / CFM		401 / 850	
		HIGH	l/s / CFM		382 / 810	
		MEDIUM	l/s / CFM		363 / 770	
		LOW	l/s / CFM		335 / 710	
	EXTERNAL STATIC PRESSURE (SH/H/M/L)		Pa (in.wg.)		98 / 78 / 68 / 59 (0.39 / 0.31 / 0.28 / 0.24)	
	SOUND PRESSURE LEVEL (SH/H/M/L)		dBA		44 / 41 / 38 / 34	
	UNIT DIMENSION	HEIGHT	mm/in		285 / 11.2	
		WIDTH	mm/in		1007 / 39.7	
		DEPTH	mm/in		600 / 23.6	
	PACKING DIMENSION	HEIGHT	mm/in		343 / 13.5	
		WIDTH	mm/in		1138 / 44.8	
		DEPTH	mm/in		690 / 27.2	
	WEIGHT		kg/lb		38 / 84	
	CONDENSATE DRAIN SIZE		mm/in		19.1 / 3/4	
OUTDOOR UNIT	AIR FLOW		l/s / CFM		741 / 1570	1605 / 3400
	SOUND PRESSURE LEVEL		dBA		~~54~~ 58	58
	UNIT DIMENSION	HEIGHT	mm/in		756 / 29.8	852 ~~850~~ / 33.5
		WIDTH	mm/in		855 / 33.7	1030 / 40.6
		DEPTH	mm/in		328 / 12.9	400 / 15.8
	PACKING DIMENSION	HEIGHT	mm/in		810 / 31.9	1010 / 39.8 ~~1000 / 39.4~~
		WIDTH	mm/in		990 / 39.0	1180 / 46.5 ~~1200 / 47.2~~
		DEPTH	mm/in		415 / 16.3	514 / 20.2 ~~560 / 22.1~~
	UNIT WEIGHT		kg/lb		65 / 143.3	95 / 209
	PIPE CONNECTION	TYPE			FLARE VALVE	
		SIZE	LIQUID	mm/in	9.5 / 3/8	
			GAS	mm/in	15.9 / 5/8	
REFRIGERANT CHARGE				kg/lb	2.40 / 5.30	1.40 / 3.09

1) ALL SPECIFICATIONS ARE SUBJECTED TO CHANGE BY THE MANUFACTURER WITHOUT PRIOR NOTICE.
2) ALL UNITS ARE BEING TESTED AND COMPLY TO ISO 13253.
3) NOMINAL COOLING AND HEATING CAPACITY ARE BASED ON THE CONDITIONS BELOW :
COOLING - 27°C DB / 19°C WB INDOOR AND 35°C DB / 24°C WB OUTDOOR
4) EER/COP CALCULATION IS BASED ON EFFECTIVE POWER INPUT AS PER ISO 13253.

General Data - Cooling Only (R22)

MODEL				ACC 30C	
	INDOOR UNIT				
	OUTDOOR UNIT			ALC 28C	ALC ~~30C~~ 30D
NOMINAL CAPACITY - 1Ø / <3Ø>			Btu/h	28000	29000 / <29000>
			W	8206	8490 / <8490>
NOMINAL TOTAL INPUT POWER - 1Ø / <3Ø>			W	3153	~~2690 / <2760>~~ 2799 / <2855>
NOMINAL RUNNING CURRENT - 1Ø / <3Ø>			A	15.50	13.1 / <5.49>
POWER SOURCE - 1Ø / <3Ø>			V/Ph/Hz	220 - 240 / 1 / 50 / <380 - 415 / 3 / 50>	
EER - 1Ø / <3Ø>			W/W	2.80	3.29 / <3.22>
REFRIGERANT TYPE				R22	
REFRIGERANT CONTROL (EXPANSION DEVICE)				INDOOR CAP. TUBE	
INDOOR UNIT	CONTROL	AIR DISCHARGE		DUCTED	
		OPERATION		SLM WIRED HANDSET	
	AIR FLOW	SUPER HIGH	l/s / CFM	425 / 900	
		HIGH	l/s / CFM	392 / 830	
		MEDIUM	l/s / CFM	359 / 760	
		LOW	l/s / CFM	335 / 710	
	EXTERNAL STATIC PRESSURE (SH/H/M/L)		Pa (in.wg.)	206 / 167 / 127 / 88 (0.83 / 0.67 / 0.51 / 0.35)	
	SOUND PRESSURE LEVEL (SH/H/M/L)		dBA	49 / 46 / 42 / 38	
	UNIT DIMENSION	HEIGHT	mm/in	378 / 14.9	
		WIDTH	mm/in	929 / 36.6	
		DEPTH	mm/in	541 / 21.3	
	PACKING DIMENSION	HEIGHT	mm/in	415 / 16.3	
		WIDTH	mm/in	1126 / 44.3	
		DEPTH	mm/in	631 / 24.8	
	WEIGHT		kg/lb	39 / 86	
	CONDENSATE DRAIN SIZE		mm/in	19.1 / 3/4	
OUTDOOR UNIT	AIR FLOW		l/s / CFM	741 / 1570	1605 / 3400
	SOUND PRESSURE LEVEL		dBA	~~54~~ 58	58
	UNIT DIMENSION	HEIGHT	mm/in	750 / 29.5	852 ~~850~~ / 33.5
		WIDTH	mm/in	855 / 33.7	1030 / 40.6
		DEPTH	mm/in	328 / 12.9	400 / 15.8
	PACKING DIMENSION	HEIGHT	mm/in	810 / 31.9	1010 / 39.8 ~~1000 / 39.4~~
		WIDTH	mm/in	990 / 39.0	1180 / 46.5 ~~1200 / 47.2~~
		DEPTH	mm/in	415 / 16.3	514 / 20.2 ~~560 / 22.1~~
	UNIT WEIGHT		kg/lb	68 / 150	95 / 209
	PIPE CONNECTION	TYPE		FLARE VALVE	
		SIZE LIQUID	mm/in	9.5 / 3/8	
		SIZE GAS	mm/in	15.9 / 5/8	
REFRIGERANT CHARGE			kg/lb	2.40 / 5.30	1.70 / 3.75

1) ALL SPECIFICATIONS ARE SUBJECTED TO CHANGE BY THE MANUFACTURER WITHOUT PRIOR NOTICE.
2) ALL UNITS ARE BEING TESTED AND COMPLY TO ISO 13253.
3) NOMINAL COOLING AND HEATING CAPACITY ARE BASED ON THE CONDITIONS BELOW :
COOLING - 27°C DB / 19°C WB INDOOR AND 35°C DB / 24°C WB OUTDOOR
4) EER/COP CALCULATION IS BASED ON EFFECTIVE POWER INPUT AS PER ISO 13253.

General Data - Cooling Only (R22)

MODEL				INDOOR UNIT	ACC 38C	
				OUTDOOR UNIT	ALC ~~35C~~ 35D	ALC ~~40C~~ 40D
NOMINAL CAPACITY - 1Ø / <3Ø>			Btu/h		35000	38000 / <38000>
			W		10257	11137 / <11137>
NOMINAL TOTAL INPUT POWER - 1Ø / <3Ø>			W		3443	3706 / <3656>
NOMINAL RUNNING CURRENT - 1Ø / <3Ø>			A		16.52	27.12 / <14.44>
POWER SOURCE - 1Ø / <3Ø>			V/Ph/Hz		220 - 240 / 1 / 50 / <380 - 415 / 3 / 50>	
EER - 1Ø / <3Ø>			W/W		3.23	2.99 / <3.03>
REFRIGERANT TYPE					R22	
REFRIGERANT CONTROL (EXPANSION DEVICE)					INDOOR CAP. TUBE	
INDOOR UNIT	CONTROL			AIR DISCHARGE	DUCTED	
				OPERATION	SLM WIRED HANDSET	
	AIR FLOW		SUPER HIGH	l/s / CFM	727 / 1540	
			HIGH	l/s / CFM	694 / 1470	
			MEDIUM	l/s / CFM	670 / 1420	
			LOW	l/s / CFM	637 / 1350	
	EXTERNAL STATIC PRESSURE (SH/H/M/L)			Pa (in.wg.)	137 / 118 / 108 / 88 (0.55 / 0.47 / 0.43 / 0.35)	
	SOUND PRESSURE LEVEL (SH/H/M/L)			dBA	55 / 51 / 48 / 45	
	UNIT DIMENSION		HEIGHT	mm/in	305 / 12.0	
			WIDTH	mm/in	1302 / 51.3	
			DEPTH	mm/in	638 / 25.1	
	PACKING DIMENSION		HEIGHT	mm/in	355 / 14.0	
			WIDTH	mm/in	1461 / 57.5	
			DEPTH	mm/in	727 / 28.6	
	WEIGHT			kg/lb	41 / 90	
	CONDENSATE DRAIN SIZE			mm/in	19.1 / 3/4	
OUTDOOR UNIT	AIR FLOW			l/s / CFM	1605 / 3400	1605 / 3400
	SOUND PRESSURE LEVEL			dBA	58	58
	UNIT DIMENSION		HEIGHT	mm/in	852 ~~850~~ / 33.5	
			WIDTH	mm/in	1030 / 40.6	
			DEPTH	mm/in	400 / 15.8	
	PACKING DIMENSION		HEIGHT	mm/in	1010 / 39.8 ~~1000 / 39.4~~	
			WIDTH	mm/in	1180 / 46.5 ~~1200 / 47.2~~	
			DEPTH	mm/in	514 / 20.2 ~~560 / 22.1~~	
	UNIT WEIGHT			kg/lb	95 / 209	100 / 221
	PIPE CONNECTION		TYPE		FLARE VALVE	
		SIZE	LIQUID	mm/in	9.5 / 3/8	
			GAS	mm/in	19.1 / 3/4	
REFRIGERANT CHARGE				kg/lb	1.85 / 4.08	2.10 / 4.63

1) ALL SPECIFICATIONS ARE SUBJECTED TO CHANGE BY THE MANUFACTURER WITHOUT PRIOR NOTICE.
2) ALL UNITS ARE BEING TESTED AND COMPLY TO ISO 13253.
3) NOMINAL COOLING AND HEATING CAPACITY ARE BASED ON THE CONDITIONS BELOW :
COOLING - 27°C DB / 19°C WB INDOOR AND 35°C DB / 24°C WB OUTDOOR
4) EER/COP CALCULATION IS BASED ON EFFECTIVE POWER INPUT AS PER ISO 13253.

General Data - Cooling Only (R22)

MODEL		INDOOR UNIT		ACC 40C	
		OUTDOOR UNIT		ALC ~~35C~~ 35D	ALC ~~40C~~ 40D
NOMINAL CAPACITY - 1Ø / <3Ø>			Btu/h	33500	38500 / <38500>
			W	9811	11276 / <11276>
NOMINAL TOTAL INPUT POWER - 1Ø / <3Ø>			W	3405	3555 / <3505>
NOMINAL RUNNING CURRENT - 1Ø / <3Ø>			A	16.40	18.50 / <5.90>
POWER SOURCE - 1Ø / <3Ø>			V/Ph/Hz	220 - 240 / 1 / 50 / <380 - 415 / 3 / 50>	
EER - 1Ø / <3Ø>			W/W	3.16	3.46 / <3.51>
REFRIGERANT TYPE				R22	
REFRIGERANT CONTROL (EXPANSION DEVICE)				INDOOR CAP. TUBE	
INDOOR UNIT	CONTROL	AIR DISCHARGE		DUCTED	
		OPERATION		SLM WIRED HANDSET	
	AIR FLOW	SUPER HIGH	l/s / CFM	519 / 1100	
		HIGH	l/s / CFM	500 / 1060	
		MEDIUM	l/s / CFM	467 / 990	
		LOW	l/s / CFM	425 / 900	
	EXTERNAL STATIC PRESSURE (SH/H/M/L)		Pa (in.wg.)	206 / 176 / 127 / 93 (0.83 / 0.71 / 0.51 / 0.37)	
	SOUND PRESSURE LEVEL (SH/H/M/L)		dBA	51 / 49 / 45 / 41	
	UNIT DIMENSION	HEIGHT	mm/in	378 / 14.9	
		WIDTH	mm/in	1045 / 41.1	
		DEPTH	mm/in	541 / 21.3	
	PACKING DIMENSION	HEIGHT	mm/in	415 / 16.3	
		WIDTH	mm/in	1245 / 49.0	
		DEPTH	mm/in	631 / 24.8	
	WEIGHT		kg/lb	42 / 93	
	CONDENSATE DRAIN SIZE		mm/in	19.1 / 3/4	
OUTDOOR UNIT	AIR FLOW		l/s / CFM	1605 / 3400	1605 / 3400
	SOUND PRESSURE LEVEL		dBA	58	58
	UNIT DIMENSION	HEIGHT	mm/in	852 ~~850~~ / 33.5	
		WIDTH	mm/in	1030 / 40.6	
		DEPTH	mm/in	400 / 15.8	
	PACKING DIMENSION	HEIGHT	mm/in	1010 / 39.8 ~~1000 / 39.4~~	
		WIDTH	mm/in	1180 / 46.5 ~~1200 / 47.2~~	
		DEPTH	mm/in	514 / 20.2 ~~560 / 22.1~~	
	UNIT WEIGHT		kg/lb	95 / 209	100 / 221
	PIPE CONNECTION	TYPE		FLARE VALVE	
		SIZE LIQUID	mm/in	9.5 / 3/8	
		SIZE GAS	mm/in	19.1 / 3/4	
REFRIGERANT CHARGE			kg/lb	1.90 / 4.19	2.40 / 5.29

1) ALL SPECIFICATIONS ARE SUBJECTED TO CHANGE BY THE MANUFACTURER WITHOUT PRIOR NOTICE.
2) ALL UNITS ARE BEING TESTED AND COMPLY TO ISO 13253.
3) NOMINAL COOLING AND HEATING CAPACITY ARE BASED ON THE CONDITIONS BELOW :
COOLING - 27°C DB / 19°C WB INDOOR AND 35°C DB / 24°C WB OUTDOOR
4) EER/COP CALCULATION IS BASED ON EFFECTIVE POWER INPUT AS PER ISO 13253.

General Data - Cooling Only (R22)

MODEL		INDOOR UNIT		ACC 50C	ACC 60C
		OUTDOOR UNIT		ALC ~~50C~~ 50D	ALC ~~61C~~ 61D
NOMINAL CAPACITY			Btu/h	~~47000~~ 48000	56000 / 55100*
			W	~~13765~~ 14100	16410 / 16150*
NOMINAL TOTAL INPUT POWER			W	~~4474~~ 4950	6006 / 7010*
NOMINAL RUNNING CURRENT			A	8.6	10.0 / 11.0*
POWER SOURCE			V/Ph/Hz	380 - 415 / 3 / 50	380 - 415 / 3 / 50
EER			W/W	~~2.97~~ 2.84	2.92 / 2.43*
REFRIGERANT TYPE				R22	
REFRIGERANT CONTROL (EXPANSION DEVICE)				INDOOR CAP. TUBE	
INDOOR UNIT	CONTROL	AIR DISCHARGE		DUCTED	
		OPERATION		SLM WIRED HANDSET	
	AIR FLOW	SUPER HIGH	l/s / CFM	750 / 1590	779 / 1650
		HIGH	l/s / CFM	651 / 1380	722 / 1530
		MEDIUM	l/s / CFM	604 / 1280	675 / 1430
		LOW	l/s / CFM	571 / 1210	609 / 1290
	EXTERNAL STATIC PRESSURE (SH/H/M/L)		Pa (in.wg.)	176 / 157 / 137 / 108 (0.7 / 0.6 / 0.6 / 0.4)	176 / 157 / 137 / 98 (0.7 / 0.6 / 0.6 / 0.4)
	SOUND PRESSURE LEVEL (SH/H/M/L)		dBA	53 / 52 / 50 / 47	55 / 53 / 50 / 47
	UNIT DIMENSION	HEIGHT	mm/in	378 / 14.9	378 / 14.9
		WIDTH	mm/in	1299 / 51.1	1499 / 59.0
		DEPTH	mm/in	541 / 21.3	541 / 21.3
	PACKING DIMENSION	HEIGHT	mm/in	415 / 16.3	415 / 16.3
		WIDTH	mm/in	1497 / 59.0	1701 / 67.0
		DEPTH	mm/in	631 / 24.8	631 / 24.8
	WEIGHT		kg/lb	54 / 119	62 / 137
	CONDENSATE DRAIN SIZE		mm/in	19.1 / 3/4	
OUTDOOR UNIT	AIR FLOW		l/s / CFM	1605 / 3400	1793 / 3800
	SOUND PRESSURE LEVEL		dBA	58	61
	UNIT DIMENSION	HEIGHT	mm/in	852 ~~850~~ / 33.5	852 ~~850~~ / 33.5
		WIDTH	mm/in	1030 / 40.6	1030 / 40.6
		DEPTH	mm/in	400 / 15.8	460 / 18.1
	PACKING DIMENSION	HEIGHT	mm/in	1010 / 39.8 ~~1000 / 39.4~~	1010 / 39.8 ~~1016 / 40.0~~
		WIDTH	mm/in	1180 / 46.5 ~~1200 / 47.2~~	1180 / 46.5 ~~1178 / 46.4~~
		DEPTH	mm/in	514 / 20.2 ~~560 / 22.1~~	514 / 20.2 ~~602 / 23.7~~
	UNIT WEIGHT		kg/lb	105 / 232	108 / 238
	PIPE CONNECTION	TYPE		FLARE VALVE	
		SIZE LIQUID	mm/in	9.5 / 3/8	12.7 / 1/2
		SIZE GAS	mm/in	19.1 / 3/4	19.1 / 3/4
REFRIGERANT CHARGE			kg/lb	3.15 / 6.94	5.00 / 11.02/4.80/10.58*

1) ALL SPECIFICATIONS ARE SUBJECTED TO CHANGE BY THE MANUFACTURER WITHOUT PRIOR NOTICE.
2) ALL UNITS ARE BEING TESTED AND COMPLY TO ISO 13253.
3) NOMINAL COOLING AND HEATING CAPACITY ARE BASED ON THE CONDITIONS BELOW :
COOLING - 27°C DB / 19°C WB INDOOR AND 35°C DB / 24°C WB OUTDOOR
4) EER/COP CALCULATION IS BASED ON EFFECTIVE POWER INPUT AS PER ISO 13253.

*5) *DATA REFER TO INDOOR COUPLED WITH MLC61D-xxYxx.*

General Data - Heat pump (R22)

MODEL	INDOOR UNIT			ACC 10CR	ACC 15CR
	OUTDOOR UNIT			ALC 10CR	ALC 15CR
NOMINAL COOLING CAPACITY			Btu/h	9500	12300
			W	2780	3600
NOMINAL HEATING CAPACITY			Btu/h	9500	12300
			W	2780	3515
NOMINAL TOTAL INPUT POWER (COOLING)			W	900	1267
NOMINAL TOTAL INPUT POWER (HEATING)			W	894	1062
NOMINAL RUNNING CURRENT (COOLING)			A	4.0	5.7
NOMINAL RUNNING CURRENT (HEATING)			A	3.5	4.8
POWER SOURCE			V/Ph/Hz	220 - 240 / 1 / 50	220 - 240 / 1 / 50
EER			W/W	3.17	2.94
COP			W/W	3.63	3.44
REFRIGERANT TYPE				R22	
REFRIGERANT CONTROL (EXPANSION DEVICE)				OUTDOOR CAP. TUBE	
INDOOR UNIT	CONTROL	AIR DISCHARGE		DUCTED	
		OPERATION		SLM WIRED HANDSET	
	AIR FLOW	HIGH	l/s / CFM	142 / 300	241 / 510
		MEDIUM	l/s / CFM	123 / 260	208 / 440
		LOW	l/s / CFM	104 / 220	170 / 360
	EXTERNAL STATIC PRESSURE (H/M/L)		Pa (in.wg.)	49 / 39 / 29 (0.2 / 0.2 / 0.1)	49 / 39 / 20 (0.2 / 0.2 / 0.1)
	SOUND PRESSURE LEVEL (H/M/L)		dBA	33 / 30 / 26	37 / 34 / 29
	UNIT DIMENSION	HEIGHT	mm/in	261 / 10.3	261 / 10.3
		WIDTH	mm/in	765 / 30.1	905 / 35.6
		DEPTH	mm/in	411 / 16.2	411 / 16.2
	PACKING DIMENSION	HEIGHT	mm/in	376 / 14.8	376 / 14.8
		WIDTH	mm/in	951 / 37.4	1091 / 43.0
		DEPTH	mm/in	541 / 21.3	541 / 21.3
	WEIGHT		kg/lb	17 / 38	21 / 46.3
	CONDENSATE DRAIN SIZE		mm/in	19.1 / 3/4	
OUTDOOR UNIT	AIR FLOW		l/s / CFM	396 / 840	453 / 960
	SOUND PRESSURE LEVEL		dBA	46	49
	UNIT DIMENSION	HEIGHT	mm/in	540 / 21.3	
		WIDTH	mm/in	700 / 27.6	
		DEPTH	mm/in	250 / 9.8	
	PACKING DIMENSION	HEIGHT	mm/in	620 / 24.4	
		WIDTH	mm/in	810 / 31.9	
		DEPTH	mm/in	330 / 13.0	
	UNIT WEIGHT		kg/lb	32 / 71	
	PIPE CONNECTION	TYPE		FLARE VALVE	
		SIZE LIQUID	mm/in	6.4 / 1/4	6.4 / 1/4
		SIZE GAS	mm/in	9.5 / 3/8	12.7 / 1/2
REFRIGERANT CHARGE			kg/lb	0.63 / 1.39	0.60 / 1.32

1) ALL SPECIFICATIONS ARE SUBJECTED TO CHANGE BY THE MANUFACTURER WITHOUT PRIOR NOTICE.
2) ALL UNITS ARE BEING TESTED AND COMPLY TO ISO 13253.
3) NOMINAL COOLING AND HEATING CAPACITY ARE BASED ON THE CONDITIONS BELOW :
COOLING - 27°C DB / 19°C WB INDOOR AND 35°C DB / 24°C WB OUTDOOR
4) EER/COP CALCULATION IS BASED ON EFFECTIVE POWER INPUT AS PER ISO 13253.

General Data - Heat pump (R22)

MODEL		INDOOR UNIT		ACC 20CR	
		OUTDOOR UNIT		ALC 18CR	ALC 20CR
NOMINAL COOLING CAPACITY			Btu/h	18000	19000
			W	5280	5570
NOMINAL HEATING CAPACITY			Btu/h	18500	19800
			W	5420	5800
NOMINAL TOTAL INPUT POWER (COOLING)			W	1910	1895
NOMINAL TOTAL INPUT POWER (HEATING)			W	1750	1845
NOMINAL RUNNING CURRENT (COOLING)			A	8.5	8.3
NOMINAL RUNNING CURRENT (HEATING)			A	7.8	8.1
POWER SOURCE			V/Ph/Hz	220 - 240 / 1 / 50	220 - 240 / 1 / 50
EER			W/W	2.87	3.05
COP			W/W	3.23	3.27
REFRIGERANT TYPE				R22	
REFRIGERANT CONTROL (EXPANSION DEVICE)				OUTDOOR CAP. TUBE	
INDOOR UNIT	CONTROL	AIR DISCHARGE		DUCTED	
		OPERATION		SLM WIRED HANDSET	
	AIR FLOW	HIGH	l/s / CFM	316 / 670	
		MEDIUM	l/s / CFM	302 / 640	
		LOW	l/s / CFM	278 / 590	
	EXTERNAL STATIC PRESSURE (H/M/L)		Pa (in.wg.)	69 / 65 / 42 (0.28 / 0.26 / 0.17)	
	SOUND PRESSURE LEVEL (H/M/L)		dBA	38 / 36 / 34	
	UNIT DIMENSION	HEIGHT	mm/in	261 / 10.3	
		WIDTH	mm/in	1065 / 41.9	
		DEPTH	mm/in	411 / 16.2	
	PACKING DIMENSION	HEIGHT	mm/in	376 / 14.8	
		WIDTH	mm/in	1251 / 49.3	
		DEPTH	mm/in	541 / 21.3	
	WEIGHT		kg/lb	22 / 49	
	CONDENSATE DRAIN SIZE		mm/in	19.1 / 3/4	
OUTDOOR UNIT	AIR FLOW		l/s / CFM	614 / 1300	
	SOUND PRESSURE LEVEL		dBA	51	
	UNIT DIMENSION	HEIGHT	mm/in	654 / 25.7	
		WIDTH	mm/in	855 / 33.7	
		DEPTH	mm/in	328 / 12.9	
	PACKING DIMENSION	HEIGHT	mm/in	810 / 31.9	
		WIDTH	mm/in	990 / 39.0	
		DEPTH	mm/in	415 / 16.3	
	UNIT WEIGHT		kg/lb	~~57 / 125.7~~	59 / 130
	PIPE CONNECTION	TYPE		FLARE VALVE	
		SIZE LIQUID	mm/in	6.4 / 1/4	
		SIZE GAS	mm/in	15.9 / 5/8	
REFRIGERANT CHARGE			kg/lb	~~1.60 / 3.53~~	1.35 / 2.98

1) ALL SPECIFICATIONS ARE SUBJECTED TO CHANGE BY THE MANUFACTURER WITHOUT PRIOR NOTICE.
2) ALL UNITS ARE BEING TESTED AND COMPLY TO ISO 13253.
3) NOMINAL COOLING AND HEATING CAPACITY ARE BASED ON THE CONDITIONS BELOW :
a) COOLING - 27°C DB / 19°C WB INDOOR AND 35°C DB / 24°C WB OUTDOOR
b) HEATING - 20°C DB INDOOR AND 7°C DB / 6°C WB OUTDOOR
4) EER/COP CALCULATION IS BASED ON EFFECTIVE POWER INPUT AS PER ISO 13253.

General Data - Heat pump (R22)

MODEL		INDOOR UNIT			ACC 25CR
		OUTDOOR UNIT			ALC 25CR
NOMINAL COOLING CAPACITY				Btu/h	23500
				W	6890
NOMINAL HEATING CAPACITY				Btu/h	24000
				W	7030
NOMINAL TOTAL INPUT POWER (COOLING)				W	2616
NOMINAL TOTAL INPUT POWER (HEATING)				W	2536
NOMINAL RUNNING CURRENT (COOLING)				A	11.7
NOMINAL RUNNING CURRENT (HEATING)				A	11.5
POWER SOURCE				V/Ph/Hz	220 - 240 / 1 / 50
EER				W/W	2.69
COP				W/W	2.83
REFRIGERANT TYPE					R22
REFRIGERANT CONTROL (EXPANSION DEVICE)					OUTDOOR CAP. TUBE
INDOOR UNIT	CONTROL	AIR DISCHARGE			DUCTED
		OPERATION			SLM WIRED HANDSET
	AIR FLOW	HIGH		l/s / CFM	382 / 810
		MEDIUM		l/s / CFM	359 / 760
		LOW		l/s / CFM	288 / 610
	EXTERNAL STATIC PRESSURE (H/M/L)			Pa (in.wg.)	41 / 31 / 18 (0.16 / 0.12 / 0.07)
	SOUND PRESSURE LEVEL (H/M/L)			dBA	40 / 39 / 36
	UNIT DIMENSION	HEIGHT		mm/in	261 / 10.3
		WIDTH		mm/in	1200 / 47.2
		DEPTH		mm/in	411 / 16.2
	PACKING DIMENSION	HEIGHT		mm/in	376 / 14.8
		WIDTH		mm/in	1386 / 54.6
		DEPTH		mm/in	541 / 21.3
	WEIGHT			kg/lb	25 / 55
	CONDENSATE DRAIN SIZE			mm/in	19.1 / 3/4
OUTDOOR UNIT	AIR FLOW			l/s / CFM	755 / 1600
	SOUND PRESSURE LEVEL			dBA	52
	UNIT DIMENSION	HEIGHT		mm/in	756 / 29.8
		WIDTH		mm/in	855 / 33.7
		DEPTH		mm/in	328 / 12.9
	PACKING DIMENSION	HEIGHT		mm/in	810 / 31.9
		WIDTH		mm/in	990 / 39.0
		DEPTH		mm/in	415 / 16.3
	UNIT WEIGHT			kg/lb	62 / 137
	PIPE CONNECTION	TYPE			FLARE VALVE
		SIZE	LIQUID	mm/in	9.5 / 3/8
			GAS	mm/in	15.9 / 5/8
REFRIGERANT CHARGE				kg/lb	1.50 / 3.31

1) ALL SPECIFICATIONS ARE SUBJECTED TO CHANGE BY THE MANUFACTURER WITHOUT PRIOR NOTICE.
2) ALL UNITS ARE BEING TESTED AND COMPLY TO ISO 13253.
3) NOMINAL COOLING AND HEATING CAPACITY ARE BASED ON THE CONDITIONS BELOW :
a) COOLING - 27°C DB / 19°C WB INDOOR AND 35°C DB / 24°C WB OUTDOOR
b) HEATING - 20°C DB INDOOR AND 7°C DB / 6°C WB OUTDOOR
4) EER/COP CALCULATION IS BASED ON EFFECTIVE POWER INPUT AS PER ISO 13253.

General Data - Heat pump (R22)

MODEL				INDOOR UNIT	ACC 28CR	
				OUTDOOR UNIT	ALC 28CR	ALC ~~30CR~~ 30DR
NOMINAL COOLING CAPACITY - 1Ø / <3Ø>			Btu/h		27000	30000 / <30000>
			W		7913	8792 / <8792>
NOMINAL HEATING CAPACITY - 1Ø / <3Ø>			Btu/h		28000	30000 / <30000>
			W		8206	8792 / <8792>
NOMINAL TOTAL INPUT POWER (COOLING) - 1Ø / <3Ø>			W		2942	3090 / <3070>
NOMINAL TOTAL INPUT POWER (HEATING) - 1Ø / <3Ø>			W		2507	3060 / <3040>
NOMINAL RUNNING CURRENT (COOLING) - 1Ø / <3Ø>			A		15.1	14.7 / <5.1>
NOMINAL RUNNING CURRENT (HEATING) - 1Ø / <3Ø>			A		13.4	14.6 / <5.0>
POWER SOURCE - 1Ø / <3Ø>			V/Ph/Hz		220 - 240 / 1 / 50 / <380 - 415 / 3 / 50>	
EER - 1Ø / <3Ø>			W/W		2.64	2.94 / <2.86>
COP - 1Ø / <3Ø>			W/W		3.23	2.97 / <2.99>
REFRIGERANT TYPE / CONTROL					R22	R22
REFRIGERANT CONTROL (EXPANSION DEVICE)					OUTDOOR CAP. TUBE	OUTDOOR CAP. TUBE + TXV
INDOOR UNIT	CONTROL			AIR DISCHARGE	DUCTED	
				OPERATION	SLM WIRED HANDSET	
	AIR FLOW		SUPER HIGH	l/s / CFM	401 / 850	
			HIGH	l/s / CFM	382 / 810	
			MEDIUM	l/s / CFM	363 / 770	
			LOW	l/s / CFM	335 / 710	
	EXTERNAL STATIC PRESSURE (H/M/L)			Pa (in.wg.)	98 / 78 / 68 / 59 (0.4 / 0.3 / 0.3 / 0.2)	
	SOUND PRESSURE LEVEL (H/M/L)			dBA	44 / 41 / 38 / 34	
	UNIT DIMENSION		HEIGHT	mm/in	285 / 11.2	
			WIDTH	mm/in	1007 / 39.7	
			DEPTH	mm/in	600 / 23.6	
	PACKING DIMENSION		HEIGHT	mm/in	343 / 13.5	
			WIDTH	mm/in	1138 / 44.8	
			DEPTH	mm/in	690 / 27.2	
	WEIGHT			kg/lb	38 / 84	
	CONDENSATE DRAIN SIZE			mm/in	19.1 / 3/4	
OUTDOOR UNIT	AIR FLOW			l/s / CFM	741 / 1570	1605 / 3400
	SOUND PRESSURE LEVEL			dBA	~~54~~ 58	58
	UNIT DIMENSION		HEIGHT	mm/in	756 / 29.8	852 ~~850~~ / 33.5
			WIDTH	mm/in	855 / 33.7	1030 / 40.6
			DEPTH	mm/in	328 / 12.9	400 / 15.8
	PACKING DIMENSION		HEIGHT	mm/in	810 / 31.9	1010 / 39.8 ~~1000 / 39.4~~
			WIDTH	mm/in	990 / 39.0	1180 / 46.5 ~~1200 / 47.2~~
			DEPTH	mm/in	415 / 16.3	514 / 20.2 ~~560 / 22.1~~
	UNIT WEIGHT			kg/lb	65 / 143.3	95 / 209
	PIPE CONNECTION		TYPE		FLARE VALVE	
		SIZE	LIQUID	mm/in	9.5 / 3/8	
			GAS	mm/in	15.9 / 5/8	
REFRIGERANT CHARGE				kg/lb	2.40 / 5.30	2.15 / 4.74

1) ALL SPECIFICATIONS ARE SUBJECTED TO CHANGE BY THE MANUFACTURER WITHOUT PRIOR NOTICE.
2) ALL UNITS ARE BEING TESTED AND COMPLY TO ISO 13253.
3) NOMINAL COOLING AND HEATING CAPACITY ARE BASED ON THE CONDITIONS BELOW :
a) COOLING - 27°C DB / 19°C WB INDOOR AND 35°C DB / 24°C WB OUTDOOR
b) HEATING - 20°C DB INDOOR AND 7°C DB / 6°C WB OUTDOOR
4) EER/COP CALCULATION IS BASED ON EFFECTIVE POWER INPUT AS PER ISO 13253.

General Data - Heat pump (R22)

MODEL	INDOOR UNIT			ACC 30CR	
	OUTDOOR UNIT			ALC 28CR	ALC ~~30CR~~ 30DR
NOMINAL COOLING CAPACITY- 1Ø / <3Ø>			Btu/h	28000	30000 / <30000>
			W	8602	8792 / <8792>
NOMINAL HEATING CAPACITY- 1Ø / <3Ø>			Btu/h	29000	30000 / <30000>
			W	8499	8792 / <8792>
NOMINAL TOTAL INPUT POWER (COOLING) - 1Ø / <3Ø>			W	2997	3145 / <3125>
NOMINAL TOTAL INPUT POWER (HEATING) - 1Ø / <3Ø>			W	2562	3115 / <3095>
NOMINAL RUNNING CURRENT (COOLING) - 1Ø / <3Ø>			A	15.5	15.0 / <5.2>
NOMINAL RUNNING CURRENT (HEATING) - 1Ø / <3Ø>			A	13.8	14.9 / <5.1>
POWER SOURCE - 1Ø / <3Ø>			V/Ph/Hz	220 - 240 / 1 / 50 / <380 - 415 / 3 / 50>	
EER - 1Ø / <3Ø>			W/W	3.09	3.00 / <3.02>
COP - 1Ø / <3Ø>			W/W	3.62	3.03 / <3.06>
REFRIGERANT TYPE / CONTROL				R22	R22
REFRIGERANT CONTROL (EXPANSION DEVICE)				OUTDOOR CAP. TUBE	OUTDOOR CAP. TUBE + TXV
INDOOR UNIT	CONTROL	AIR DISCHARGE		DUCTED	
		OPERATION		SLM WIRED HANDSET	
	AIR FLOW	SUPER HIGH	l/s / CFM	425 / 900	
		HIGH	l/s / CFM	392 / 830	
		MEDIUM	l/s / CFM	359 / 760	
		LOW	l/s / CFM	335 / 710	
	EXTERNAL STATIC PRESSURE (H/M/L)		Pa (in.wg.)	206 / 167 / 127 / 88 (0.8 / 0.7 / 0.5 / 0.4)	
	SOUND PRESSURE LEVEL (H/M/L)		dBA	49 / 46 / 42 / 38	
	UNIT DIMENSION	HEIGHT	mm/in	378 / 14.9	
		WIDTH	mm/in	929 / 36.6	
		DEPTH	mm/in	541 / 21.3	
	PACKING DIMENSION	HEIGHT	mm/in	415 / 16.3	
		WIDTH	mm/in	1126 / 44.3	
		DEPTH	mm/in	631 / 24.8	
	WEIGHT		kg/lb	39 / 86	
	CONDENSATE DRAIN SIZE		mm/in	19.1 / 3/4	
OUTDOOR UNIT	AIR FLOW		l/s / CFM	741 / 1570	1605 / 3400
	SOUND PRESSURE LEVEL		dBA	~~54~~ 58	58
	UNIT DIMENSION	HEIGHT	mm/in	756 / 29.8	852 ~~850~~ / 33.46
		WIDTH	mm/in	855 / 33.7	1030 / 40.55
		DEPTH	mm/in	328 / 12.9	400 / 15.75
	PACKING DIMENSION	HEIGHT	mm/in	810 / 31.9	1010 / 39.8 ~~1000 / 39.37~~
		WIDTH	mm/in	990 / 39.0	1180 / 46.5 ~~1200 / 47.24~~
		DEPTH	mm/in	415 / 16.3	514 / 20.2 ~~560 / 22.05~~
	UNIT WEIGHT		kg/lb	68 / 150	95 / 209
	PIPE CONNECTION	TYPE		FLARE VALVE	
		SIZE LIQUID	mm/in	9.5 / 3/8	
		SIZE GAS	mm/in	15.9 / 5/8	
REFRIGERANT CHARGE			kg/lb	2.40 / 5.30	2.15 / 4.74

1) ALL SPECIFICATIONS ARE SUBJECTED TO CHANGE BY THE MANUFACTURER WITHOUT PRIOR NOTICE.
2) ALL UNITS ARE BEING TESTED AND COMPLY TO ISO 13253.
3) NOMINAL COOLING AND HEATING CAPACITY ARE BASED ON THE CONDITIONS BELOW :
a) COOLING - 27°C DB / 19°C WB INDOOR AND 35°C DB / 24°C WB OUTDOOR
b) HEATING - 20°C DB INDOOR AND 7°C DB / 6°C WB OUTDOOR
4) EER/COP CALCULATION IS BASED ON EFFECTIVE POWER INPUT AS PER ISO 13253.

General Data - Heat pump (R22)

MODEL				ACC 38CR	
INDOOR UNIT				ALC ~~35CR~~ 35DR	ALC ~~40CR~~ 40DR
OUTDOOR UNIT					
NOMINAL COOLING CAPACITY- 1Ø / <3Ø>			Btu/h	35000	37000 ~~38000~~ / <38000>
			W	10257	~~11137 / <11137>~~ 10800 / <11100>
NOMINAL HEATING CAPACITY- 1Ø / <3Ø>			Btu/h	36000	~~38500 / <38500>~~ 40000 / <41000>
			W	10550	~~11280 / <11280>~~ 11700 / <12000>
NOMINAL TOTAL INPUT POWER (COOLING) - 1Ø / <3Ø>			W	3572	~~3766 / <3736>~~ 3850 / <3750>
NOMINAL TOTAL INPUT POWER (HEATING) - 1Ø / <3Ø>			W	3303	~~3476 / <3436>~~ 3700 / <3600>
NOMINAL RUNNING CURRENT (COOLING) - 1Ø / <3Ø>			A	16.5	18.1 / <5.4>
NOMINAL RUNNING CURRENT (HEATING) - 1Ø / <3Ø>			A	16.5	16.7 / <3.0>
POWER SOURCE - 1Ø / <3Ø>			V/Ph/Hz	220 - 240 / 1 / 50 / <380 - 415 / 3 / 50>	
EER - 1Ø / <3Ø>			W/W	3.38	~~3.19 / <3.21>~~ 2.82 / <2.97>
COP - 1Ø / <3Ø>			W/W	3.48	~~3.52 / <3.55>~~ 3.17 / <3.34>
REFRIGERANT TYPE / CONTROL				R22	
REFRIGERANT CONTROL (EXPANSION DEVICE)				OUTDOOR CAP. TUBE + TXV	
INDOOR UNIT	CONTROL	AIR DISCHARGE		DUCTED	
		OPERATION		SLM WIRED HANDSET	
	AIR FLOW	SUPER HIGH	l/s / CFM	727 / 1540	
		HIGH	l/s / CFM	694 / 1470	
		MEDIUM	l/s / CFM	670 / 1420	
		LOW	l/s / CFM	637 / 1350	
	EXTERNAL STATIC PRESSURE (H/M/L)		Pa (in.wg.)	137 / 118 / 108 / 88 (0.6 / 0.5 / 0.4 / 0.4)	
	SOUND PRESSURE LEVEL (H/M/L)		dBA	55 / 51 / 48 / 45	
	UNIT DIMENSION	HEIGHT	mm/in	305 / 12.0	
		WIDTH	mm/in	1302 / 51.3	
		DEPTH	mm/in	638 / 25.1	
	PACKING DIMENSION	HEIGHT	mm/in	355 / 14.0	
		WIDTH	mm/in	1461 / 57.5	
		DEPTH	mm/in	727 / 28.6	
	WEIGHT		kg/lb	41 / 90	
	CONDENSATE DRAIN SIZE		mm/in	19.1 / 3/4	
OUTDOOR UNIT	AIR FLOW		l/s / CFM	1605 / 3400	1605 / 3400
	SOUND PRESSURE LEVEL		dBA	58	58
	UNIT DIMENSION	HEIGHT	mm/in	852 ~~850~~ / 33.5	
		WIDTH	mm/in	1030 / 40.6	
		DEPTH	mm/in	400 / 15.8	
	PACKING DIMENSION	HEIGHT	mm/in	1010 / 39.8 ~~1000 / 39.4~~	
		WIDTH	mm/in	1180 / 46.5 ~~1200 / 47.2~~	
		DEPTH	mm/in	514 / 20.2 ~~560 / 22.1~~	
	UNIT WEIGHT		kg/lb	95 / 209	100 / 221
	PIPE CONNECTION	TYPE		FLARE VALVE	
		SIZE LIQUID	mm/in	9.5 / 3/8	
		SIZE GAS	mm/in	19.1 / 3/4	
REFRIGERANT CHARGE			kg/lb	2.60 / 5.73	2.60 / 5.73

1) ALL SPECIFICATIONS ARE SUBJECTED TO CHANGE BY THE MANUFACTURER WITHOUT PRIOR NOTICE.
2) ALL UNITS ARE BEING TESTED AND COMPLY TO ISO 13253.
3) NOMINAL COOLING AND HEATING CAPACITY ARE BASED ON THE CONDITIONS BELOW :
a) COOLING - 27°C DB / 19°C WB INDOOR AND 35°C DB / 24°C WB OUTDOOR
b) HEATING - 20°C DB INDOOR AND 7°C DB / 6°C WB OUTDOOR
4) EER/COP CALCULATION IS BASED ON EFFECTIVE POWER INPUT AS PER ISO 13253.

General Data - Heat pump (R22)

MODEL				INDOOR UNIT	ACC 40CR	
				OUTDOOR UNIT	ALC ~~35CR~~ 35DR	ALC ~~40CR~~ 40DR
NOMINAL COOLING CAPACITY- 1Ø / <3Ø>			Btu/h		33500	~~40000 / <40000>~~ 37500 / <37500>
			W		9818	~~11723 / <11723>~~ 11000 / <11100>
NOMINAL HEATING CAPACITY- 1Ø / <3Ø>			Btu/h		35000	40000 / <40000>
			W		10257	~~11723 / <11723>~~ 11700 / <11700>
NOMINAL TOTAL INPUT POWER (COOLING) - 1Ø / <3Ø>			W		3265	~~3728 / <3698>~~ 3800 / <3700>
NOMINAL TOTAL INPUT POWER (HEATING) - 1Ø / <3Ø>			W		3265	~~3438 / <3408>~~ 3700 / <3600>
NOMINAL RUNNING CURRENT (COOLING) - 1Ø / <3Ø>			A		16.4	18.0 / <5.4>
NOMINAL RUNNING CURRENT (HEATING) - 1Ø / <3Ø>			A		16.4	16.6 / <4.0>
POWER SOURCE - 1Ø / <3Ø>			V/Ph/Hz		220 - 240 / 1 / 50 / <380 - 415 / 3 / 50>	
EER - 1Ø / <3Ø>			W/W		3.30	~~3.41 / <3.44>~~ 2.89 / <2.97>
COP - 1Ø / <3Ø>			W/W		3.45	~~3.73 / <3.76>~~ 3.17 / <3.26>
REFRIGERANT TYPE / CONTROL					R22	
REFRIGERANT CONTROL (EXPANSION DEVICE)					OUTDOOR CAP. TUBE + TXV	
INDOOR UNIT	CONTROL			AIR DISCHARGE	DUCTED	
				OPERATION	SLM WIRED HANDSET	
	AIR FLOW		SUPER HIGH	l/s / CFM	519 / 1100	
			HIGH	l/s / CFM	500 / 1060	
			MEDIUM	l/s / CFM	467 / 990	
			LOW	l/s / CFM	425 / 900	
	EXTERNAL STATIC PRESSURE (H/M/L)			Pa (in.wg.)	206 / 176 / 127 / 93 (0.8 / 0.7 / 0.5 / 0.4)	
	SOUND PRESSURE LEVEL (H/M/L)			dBA	51 / 49 / 45 / 41	
	UNIT DIMENSION		HEIGHT	mm/in	378 / 14.9	
			WIDTH	mm/in	1045 / 41.1	
			DEPTH	mm/in	541 / 21.3	
	PACKING DIMENSION		HEIGHT	mm/in	415 / 16.3	
			WIDTH	mm/in	1245 / 49.0	
			DEPTH	mm/in	631 / 24.8	
	WEIGHT			kg/lb	42 / 93	
	CONDENSATE DRAIN SIZE			mm/in	19.1 / 3/4	
OUTDOOR UNIT	AIR FLOW			l/s / CFM	1605 / 3400	1605 / 3400
	SOUND PRESSURE LEVEL			dBA	58	58
	UNIT DIMENSION		HEIGHT	mm/in	852 ~~850~~ / 33.5	
			WIDTH	mm/in	1030 / 40.6	
			DEPTH	mm/in	400 / 15.8	
	PACKING DIMENSION		HEIGHT	mm/in	1010 / 39.8 ~~1000 / 39.4~~	
			WIDTH	mm/in	1180 / 46.5 ~~1200 / 47.2~~	
			DEPTH	mm/in	514 / 20.2 ~~560 / 22.1~~	
	UNIT WEIGHT			kg/lb	95 / 209	100 / 221
	PIPE CONNECTION		TYPE		FLARE VALVE	
		SIZE	LIQUID	mm/in	9.5 / 3/8	
			GAS	mm/in	19.1 / 3/4	
REFRIGERANT CHARGE				kg/lb	2.60 / 5.73	2.60 / 5.73

1) ALL SPECIFICATIONS ARE SUBJECTED TO CHANGE BY THE MANUFACTURER WITHOUT PRIOR NOTICE.
2) ALL UNITS ARE BEING TESTED AND COMPLY TO ISO 13253.
3) NOMINAL COOLING AND HEATING CAPACITY ARE BASED ON THE CONDITIONS BELOW :
a) COOLING - 27°C DB / 19°C WB INDOOR AND 35°C DB / 24°C WB OUTDOOR
b) HEATING - 20°C DB INDOOR AND 7°C DB / 6°C WB OUTDOOR
4) EER/COP CALCULATION IS BASED ON EFFECTIVE POWER INPUT AS PER ISO 13253.

General Data - Heat pump (R22)

MODEL		INDOOR UNIT			ACC 50CR	ACC 60CR
		OUTDOOR UNIT			ALC ~~50CR~~ 50DR	ALC ~~61CR~~ 61DR
NOMINAL COOLING CAPACITY				Btu/h	48000 ~~50000~~	56000
				W	14100 ~~14654~~	16410
NOMINAL HEATING CAPACITY				Btu/h	50000 ~~53000~~	56000
				W	14700 ~~15533~~	16410
NOMINAL TOTAL INPUT POWER (COOLING)				W	5200 ~~5047~~	6010
NOMINAL TOTAL INPUT POWER (HEATING)				W	4550 ~~4447~~	4980
NOMINAL RUNNING CURRENT (COOLING)				A	9.0	10.0
NOMINAL RUNNING CURRENT (HEATING)				A	6.0	8.8
POWER SOURCE				V/Ph/Hz	380 - 415 / 3 / 50	380 - 415 / 3 / 50
EER				W/W	2.71 ~~3.11~~	2.91
COP				W/W	3.22 ~~3.78~~	3.57
REFRIGERANT TYPE					R22	R22
REFRIGERANT CONTROL (EXPANSION DEVICE)					OUTDOOR CAP. TUBE + TXV	INDOOR & OUTDOOR CAP. TUBE
INDOOR UNIT	CONTROL	AIR DISCHARGE			DUCTED	
		OPERATION			SLM WIRED HANDSET	
	AIR FLOW	SUPER HIGH		l/s / CFM	750 / 1590	779 / 1650
		HIGH		l/s / CFM	651 / 1380	722 / 1530
		MEDIUM		l/s / CFM	604 / 1280	675 / 1430
		LOW		l/s / CFM	571 / 1210	609 / 1290
	EXTERNAL STATIC PRESSURE (H/M/L)			Pa (in.wg.)	176 / 157 / 137 / 108 (0.7 / 0.6 / 0.6 / 0.4)	176 / 157 / 137 / 98 (0.7 / 0.6 / 0.6 / 0.4)
	SOUND PRESSURE LEVEL (H/M/L)			dBA	53 / 52 / 50 / 47	55 / 53 / 50 / 47
	UNIT DIMENSION	HEIGHT		mm/in	378 / 14.9	378 / 14.9
		WIDTH		mm/in	1299 / 51.1	1499 / 59.0
		DEPTH		mm/in	541 / 21.3	541 / 21.3
	PACKING DIMENSION	HEIGHT		mm/in	415 / 16.3	415 / 16.3
		WIDTH		mm/in	1497 / 59.0	1701 / 67.0
		DEPTH		mm/in	631 / 24.8	631 / 24.8
	WEIGHT			kg/lb	54 / 119	62 / 137
	CONDENSATE DRAIN SIZE			mm/in	19.1 / 3/4	
OUTDOOR UNIT	AIR FLOW			l/s / CFM	1605 / 3400	1793 / 3800
	SOUND PRESSURE LEVEL			dBA	58	61
	UNIT DIMENSION	HEIGHT		mm/in	852 ~~850~~ / 33.5	852 ~~850~~ / 33.5
		WIDTH		mm/in	1030 / 40.6	1030 / 40.6
		DEPTH		mm/in	400 / 15.8	460 / 18.1
	PACKING DIMENSION	HEIGHT		mm/in	1010 / 39.8 ~~1000 / 39.4~~	1010 / 39.8 ~~1016 / 40.0~~
		WIDTH		mm/in	1180 / 46.5 ~~1200 / 47.2~~	1180 / 46.5 ~~1178 / 46.4~~
		DEPTH		mm/in	514 / 20.2 ~~560 / 22.1~~	514 / 20.2 ~~602 / 23.7~~
	UNIT WEIGHT			kg/lb	105 / 231	108 / 238
	PIPE CONNECTION	TYPE			FLARE VALVE	
		SIZE	LIQUID	mm/in	9.5 / 3/8	12.7 / 1/2
			GAS	mm/in	19.1 / 3/4	19.1 / 3/4
REFRIGERANT CHARGE				kg/lb	2.75 / 5.73	5.00 / 11.02

1) ALL SPECIFICATIONS ARE SUBJECTED TO CHANGE BY THE MANUFACTURER WITHOUT PRIOR NOTICE.
2) ALL UNITS ARE BEING TESTED AND COMPLY TO ISO 13253.
3) NOMINAL COOLING AND HEATING CAPACITY ARE BASED ON THE CONDITIONS BELOW :
a) COOLING - 27°C DB / 19°C WB INDOOR AND 35°C DB / 24°C WB OUTDOOR
b) HEATING - 20°C DB INDOOR AND 7°C DB / 6°C WB OUTDOOR
4) EER/COP CALCULATION IS BASED ON EFFECTIVE POWER INPUT AS PER ISO 13253.

General Data - Cooling Only (R410A)

MODEL		INDOOR UNIT			A5CC 10C	A5CC 15C
		OUTDOOR UNIT			A5LC 10C	A5LC 15C
NOMINAL CAPACITY				Btu/h	9500	12500
				W	2780	3660
NOMINAL TOTAL INPUT POWER				W	961	1297
NOMINAL RUNNING CURRENT				A	4.0	5.7
POWER SOURCE				V/Ph/Hz	220 - 240 / 1 / 50	220 / 1 / 50
EER				W/W	2.96	2.91
REFRIGERANT TYPE					R410A	
REFRIGERANT CONTROL (EXPANSION DEVICE)					OUTDOOR CAP. TUBE	
INDOOR UNIT	CONTROL	AIR DISCHARGE			DUCTED	
		OPERATION			SLM WIRED HANDSET	
	AIR FLOW	HIGH		l/s / CFM	118 / 250	194 / 410
		MEDIUM		l/s / CFM	112 / 235	175 / 370
		LOW		l/s / CFM	100 / 210	118 / 250
	EXTERNAL STATIC PRESSURE (H/M/L)			Pa (in.wg.)	29 / 20 / 10 (0.12 / 0.08 / 0.04)	29 / 20 / 10 (0.12 / 0.08 / 0.04)
	SOUND PRESSURE LEVEL (H/M/L)			dBA	33 / 30 / 26	37 / 34 / 29
	UNIT DIMENSION	HEIGHT		mm/in	261 / 10.3	261 / 10.3
		WIDTH		mm/in	765 / 30.1	905 / 35.6
		DEPTH		mm/in	411 / 16.2	411 / 16.2
	PACKING DIMENSION	HEIGHT		mm/in	376 / 14.8	376 / 14.8
		WIDTH		mm/in	951 / 37.4	1091 / 43.0
		DEPTH		mm/in	541 / 21.3	541 / 21.3
	WEIGHT			kg/lb	17 / 38	21 / 46
	CONDENSATE DRAIN SIZE			mm/in	19.1 / 3/4	
OUTDOOR UNIT	AIR FLOW			l/s / CFM	396 / 840	453 / 960
	SOUND PRESSURE LEVEL			dBA	46	49
	UNIT DIMENSION	HEIGHT		mm/in	540 / 21.3	
		WIDTH		mm/in	700 / 27.6	
		DEPTH		mm/in	250 / 9.8	
	PACKING DIMENSION	HEIGHT		mm/in	620 / 24.4	
		WIDTH		mm/in	810 / 31.9	
		DEPTH		mm/in	330 / 13.0	
	UNIT WEIGHT			kg/lb	32 / 71	
	PIPE CONNECTION	TYPE			FLARE VALVE	
		SIZE	LIQUID	mm/in	6.4 / 1/4	6.4 / 1/4
			GAS	mm/in	9.5 / 3/8	12.7 / 1/2
REFRIGERANT CHARGE				kg/lb	0.71 / 1.57	0.94 / 2.07

1) ALL SPECIFICATIONS ARE SUBJECTED TO CHANGE BY THE MANUFACTURER WITHOUT PRIOR NOTICE.
2) ALL UNITS ARE BEING TESTED AND COMPLY TO ISO 13253.
3) NOMINAL COOLING AND HEATING CAPACITY ARE BASED ON THE CONDITIONS BELOW :
COOLING - 27°C DB / 19°C WB INDOOR AND 35°C DB / 24°C WB OUTDOOR
4) EER/COP CALCULATION IS BASED ON EFFECTIVE POWER INPUT AS PER ISO 13253.

General Data - Cooling Only (R410A)

MODEL		INDOOR UNIT			A5CC 20C	A5CC 25C
		OUTDOOR UNIT			A5LC 20C	A5LC 25C
NOMINAL CAPACITY - 1Ø / <3Ø>				Btu/h	18000 / <18000>	21000 / <22860>
				W	5280 / <5280>	6155 / <6700>
NOMINAL TOTAL INPUT POWER - 1Ø / <3Ø>				W	1757 / <1791>	2003 / <2274>
NOMINAL RUNNING CURRENT - 1Ø / <3Ø>				A	7.6 / <3.4>	8.9 / <4.2>
POWER SOURCE - 1Ø / <3Ø>				V/Ph/Hz	220 - 240 / 1 / 50 / <380 - 415 / 3 / 50>	
EER - 1Ø / <3Ø>				W/W	3.13 / <3.07>	3.15 / <3.02>
REFRIGERANT TYPE					R410A	
REFRIGERANT CONTROL (EXPANSION DEVICE)					OUTDOOR CAP. TUBE	
INDOOR UNIT	CONTROL	AIR DISCHARGE			DUCTED	
		OPERATION			SLM WIRED HANDSET	
	AIR FLOW	HIGH		l/s / CFM	270 / 570	326 / 690
		MEDIUM		l/s / CFM	264 / 558	312 / 660
		LOW		l/s / CFM	227 / 480	253 / 535
	EXTERNAL STATIC PRESSURE (H/M/L)			Pa (in.wg.)	29 / 20 / 10 (0.12 / 0.08 / 0.04)	29 / 20 / 10 (0.12 / 0.08 / 0.04)
	SOUND PRESSURE LEVEL (H/M/L)			dBA	38 / 36 / 34	40 / 39 / 36
	UNIT DIMENSION	HEIGHT		mm/in	261 / 10.3	261 / 10.3
		WIDTH		mm/in	1065 / 41.9	1200 / 47.2
		DEPTH		mm/in	411 / 16.2	411 / 16.2
	PACKING DIMENSION	HEIGHT		mm/in	376 / 14.8	376 / 14.8
		WIDTH		mm/in	1251 / 49.3	1386 / 54.6
		DEPTH		mm/in	541 / 21.3	541 / 21.3
	WEIGHT			kg/lb	22 / 49	25 / 55
	CONDENSATE DRAIN SIZE			mm/in	19.1 / 3/4	
OUTDOOR UNIT	AIR FLOW			l/s / CFM	614 / 1300	689 / 1460
	SOUND PRESSURE LEVEL			dBA	52	
	UNIT DIMENSION	HEIGHT		mm/in	654 / 25.7	756 / 29.8
		WIDTH		mm/in	855 / 33.7	855 / 33.7
		DEPTH		mm/in	328 / 12.9	328 / 12.9
	PACKING DIMENSION	HEIGHT		mm/in	710 / 28.0	810 / 31.9
		WIDTH		mm/in	990 / 39.0	990 / 39.0
		DEPTH		mm/in	415 / 16.3	415 / 16.3
	UNIT WEIGHT			kg/lb	59 / 130	62 / 137
	PIPE CONNECTION	TYPE			FLARE VALVE	
		SIZE	LIQUID	mm/in	6.4 / 1/4	6.4 / 1/4
			GAS	mm/in	12.7 / 1/2	15.9 / 5/8
REFRIGERANT CHARGE				kg/lb	1.38 / 3.04	1.60 / 3.53

1) ALL SPECIFICATIONS ARE SUBJECTED TO CHANGE BY THE MANUFACTURER WITHOUT PRIOR NOTICE.
2) ALL UNITS ARE BEING TESTED AND COMPLY TO ISO 13253.
3) NOMINAL COOLING AND HEATING CAPACITY ARE BASED ON THE CONDITIONS BELOW :
COOLING - 27°C DB / 19°C WB INDOOR AND 35°C DB / 24°C WB OUTDOOR
4) EER/COP CALCULATION IS BASED ON EFFECTIVE POWER INPUT AS PER ISO 13253.

General Data - Cooling Only (R410A)

MODEL		INDOOR UNIT		A5CC 28C
		OUTDOOR UNIT		A5LC 28C
NOMINAL CAPACITY - 1Ø / <3Ø>			Btu/h	26000 / <27000>
			W	7620 / <7910>
NOMINAL TOTAL INPUT POWER - 1Ø / <3Ø>			W	2892 / <2876>
NOMINAL RUNNING CURRENT -1Ø / <3Ø>			A	12.8 / <4.9>
POWER SOURCE - 1Ø / <3Ø>			V/Ph/Hz	220 - 240 / 1 / 50 / <380 - 415 / 3 / 50>
EER - 1Ø / <3Ø>			W/W	2.73 / <2.85>
REFRIGERANT TYPE				R410A
REFRIGERANT CONTROL (EXPANSION DEVICE)				OUTDOOR CAP. TUBE
INDOOR UNIT	CONTROL	AIR DISCHARGE		DUCTED
		OPERATION		SLM WIRED HANDSET
	AIR FLOW	SUPER HIGH	l/s / CFM	401 / 850
		HIGH	l/s / CFM	382 / 810
		MEDIUM	l/s / CFM	363 / 770
		LOW	l/s / CFM	335 / 710
	EXTERNAL STATIC PRESSURE (H/M/L)		Pa (in.wg.)	98 / 78 / 68 / 59 (0.4 / 0.3 / 0.3 / 0.2)
	SOUND PRESSURE LEVEL (H/M/L)		dBA	44 / 41 / 38 / 34
	UNIT DIMENSION	HEIGHT	mm/in	285 / 11.2
		WIDTH	mm/in	1007 / 39.7
		DEPTH	mm/in	600 / 23.6
	PACKING DIMENSION	HEIGHT	mm/in	343 / 13.5
		WIDTH	mm/in	1138 / 44.8
		DEPTH	mm/in	690 / 27.2
	WEIGHT		kg/lb	38 / 84
	CONDENSATE DRAIN SIZE		mm/in	19.1 / 3/4
OUTDOOR UNIT	AIR FLOW		l/s / CFM	684 / 1450
	SOUND PRESSURE LEVEL		dBA	~~54~~ 58
	UNIT DIMENSION	HEIGHT	mm/in	756 / 29.8
		WIDTH	mm/in	855 / 33.7
		DEPTH	mm/in	328 / 12.9
	PACKING DIMENSION	HEIGHT	mm/in	810 / 31.9
		WIDTH	mm/in	990 / 39.0
		DEPTH	mm/in	415 / 16.3
	UNIT WEIGHT		kg/lb	68 / 150
	PIPE CONNECTION	TYPE		FLARE VALVE
		SIZE LIQUID	mm/in	9.5 / 3/8
		SIZE GAS	mm/in	15.9 / 5/8
REFRIGERANT CHARGE			kg/lb	1.80 / 3.97

1) ALL SPECIFICATIONS ARE SUBJECTED TO CHANGE BY THE MANUFACTURER WITHOUT PRIOR NOTICE.
2) ALL UNITS ARE BEING TESTED AND COMPLY TO ISO 13253.
3) NOMINAL COOLING AND HEATING CAPACITY ARE BASED ON THE CONDITIONS BELOW :
COOLING - 27°C DB / 19°C WB INDOOR AND 35°C DB / 24°C WB OUTDOOR
4) EER/COP CALCULATION IS BASED ON EFFECTIVE POWER INPUT AS PER ISO 13253.

General Data - Cooling Only (R410A)

MODEL				INDOOR UNIT	A5CC 38C	
				OUTDOOR UNIT	A5LC ~~35C~~ 35D	A5LC ~~40C~~ 40D
NOMINAL COOLING CAPACITY - 1Ø / <3Ø>				Btu/h	32000 / <33000>	39000 / <39000>
				W	9380 / <9670>	11430 / <11430>
NOMINAL TOTAL INPUT POWER - 1Ø / <3Ø>				W	3287 / <3427>	4287 / <4287>
NOMINAL RUNNING CURRENT - 1Ø / <3Ø>				A	15.2 / <5.9>	<7.4>
POWER SOURCE - 1Ø / <3Ø>				V/Ph/Hz	220 - 240 / 1 / 50 / <380 - 415 / 3 / 50>	
EER - 1Ø / <3Ø>				W/W	3.07 / <3.03>	2.82 / <2.82>
REFRIGERANT TYPE					R410A	
REFRIGERANT CONTROL (EXPANSION DEVICE)					OUTDOOR CAP. TUBE	
INDOOR UNIT	CONTROL	AIR DISCHARGE			DUCTED	
		OPERATION			SLM WIRED HANDSET	
	AIR FLOW	SUPER HIGH		l/s / CFM	604 / 1280	
		HIGH		l/s / CFM	547 / 1160	
		MEDIUM		l/s / CFM	496 / 1050	
		LOW		l/s / CFM	434 / 920	
	EXTERNAL STATIC PRESSURE (H/M/L)			Pa (in. wg.)	118 / 96 / 78 / 61 (0.47 / 0.39 / 0.31 / 0.24)	
	SOUND PRESSURE LEVEL (H/M/L)			dBA	52 / 49 / 47 / 45	
	UNIT DIMENSION	HEIGHT		mm/in	305 / 12.0	
		WIDTH		mm/in	1302 / 51.3	
		DEPTH		mm/in	638 / 25.1	
	PACKING DIMENSION	HEIGHT		mm/in	355 / 14.0	
		WIDTH		mm/in	1461 / 57.5	
		DEPTH		mm/in	727 / 28.6	
	WEIGHT			kg/lb	41 / 90	
	CONDENSATE DRAIN SIZE			mm/in	19.1 / 0.75	
OUTDOOR UNIT	AIR FLOW			l/s / CFM	1605 / 3400	
	SOUND PRESSURE LEVEL			dBA	58	
	UNIT DIMENSION	HEIGHT		mm/in	852 ~~850~~ / 33.5	
		WIDTH		mm/in	1030 / 40.6	
		DEPTH		mm/in	400 / 15.8	
	PACKING DIMENSION	HEIGHT		mm/in	1010 / 39.8 ~~1000 / 39.4~~	
		WIDTH		mm/in	1180 / 46.5 ~~1200 / 47.2~~	
		DEPTH		mm/in	514 / 20.2 ~~560 / 22.1~~	
	UNIT WEIGHT			kg/lb	~~95 / 209~~ 86 / 189	~~100 / 221~~ 95 / 209
	PIPE CONNECTION	TYPE			FLARE VALVE	
		SIZE	LIQUID	mm/in	9.5 / 3/8	
			GAS	mm/in	15.9 / 5/8	
REFRIGERANT CHARGE				kg/lb	2.6 / 5.73	2.175 / 4.80

1) ALL SPECIFICATIONS ARE SUBJECTED TO CHANGE BY THE MANUFACTURER WITHOUT PRIOR NOTICE.
2) ALL UNITS ARE BEING TESTED AND COMPLY TO ISO 13253.
3) NOMINAL COOLING AND HEATING CAPACITY ARE BASED ON THE CONDITIONS BELOW :
a) COOLING - 27°C DB / 19°C WB INDOOR AND 35°C DB / 24°C WB OUTDOOR
b) HEATING - 20°C DB INDOOR AND 7°C DB / 6°C WB OUTDOOR
4) EER/COP CALCULATION IS BASED ON EFFECTIVE POWER INPUT AS PER ISO 13253.

General Data - Cooling Only (R410A)

MODEL				A5CC 50C	A5CC 60C
	INDOOR UNIT				
	OUTDOOR UNIT			A5LC ~~58C~~ 50D	A5LC ~~61C~~ 61D
NOMINAL CAPACITY			Btu/h	45000	55000
			W	13190	16120
NOMINAL TOTAL INPUT POWER			W	4600	5360
NOMINAL RUNNING CURRENT			A	8.9	9.7
POWER SOURCE			V/Ph/Hz	380 - 415 / 3 / 50	380 - 415 / 3 / 50
EER			W/W	2.87	3.01
REFRIGERANT TYPE				R410A	
REFRIGERANT CONTROL (EXPANSION DEVICE)				~~OUTDOOR CAP. TUBE & TXV~~ OUTDOOR CAP. TUBE	
INDOOR UNIT	CONTROL	AIR DISCHARGE		DUCTED	
		OPERATION		SLM WIRED HANDSET	
	AIR FLOW	SUPER HIGH	l/s / CFM	675 / 1430	812 / 1720
		HIGH	l/s / CFM	623 / 1320	732 / 1550
		MEDIUM	l/s / CFM	580 / 1230	632 / 1340
		LOW	l/s / CFM	533 / 1130	552 / 1170
	EXTERNAL STATIC PRESSURE (H/M/L)		Pa (in.wg.)	147 / 126 / 109 / 92 (0.6 / 0.5 / 0.4 / 0.4)	147 / 120 / 90 / 69 (0.6 / 0.5 / 0.4 / 0.3)
	SOUND PRESSURE LEVEL (H/M/L)		dBA	54 / 53 / 52 / 51	54 / 52 / 49 / 46
	UNIT DIMENSION	HEIGHT	mm/in	378 / 14.9	378 / 14.9
		WIDTH	mm/in	1299 / 51.1	1499 / 59.0
		DEPTH	mm/in	541 / 21.3	541 / 21.3
	PACKING DIMENSION	HEIGHT	mm/in	415 / 16.3	415 / 16.3
		WIDTH	mm/in	1497 / 59.0	1701 / 67.0
		DEPTH	mm/in	631 / 24.8	631 / 24.8
	WEIGHT		kg/lb	54 / 119	62 / 137
	CONDENSATE DRAIN SIZE		mm/in	19.1 / 3/4	
OUTDOOR UNIT	AIR FLOW		l/s / CFM	2171 / 4600	2171 / 4600
	SOUND PRESSURE LEVEL		dBA	60	65
	UNIT DIMENSION	HEIGHT	mm/in	852 ~~850~~ / 33.5	852 ~~850~~ / 33.5
		WIDTH	mm/in	1030 / 40.6	1030 / 40.6
		DEPTH	mm/in	400 / 15.8	460 / 18.1
	PACKING DIMENSION	HEIGHT	mm/in	1010 / 39.8 ~~1000 / 39.4~~	1010 / 39.8 ~~1016 / 40.0~~
		WIDTH	mm/in	1180 / 46.5 ~~1200 / 47.2~~	1180 / 46.5 ~~1178 / 46.4~~
		DEPTH	mm/in	514 / 20.2 ~~560 / 22.1~~	514 / 20.2 ~~602 / 23.7~~
	UNIT WEIGHT		kg/lb	~~105 / 232~~ 98 / 216	~~108 / 238~~ 105 / 231
	PIPE CONNECTION	TYPE		FLARE VALVE	
		SIZE LIQUID	mm/in	9.5 / 3/8	9.5 / 3/8
		SIZE GAS	mm/in	15.9 / 5/8	19.1 / 3/4
REFRIGERANT CHARGE			kg/lb	2.73 / 6.01	3.3 / 7.27

1) ALL SPECIFICATIONS ARE SUBJECTED TO CHANGE BY THE MANUFACTURER WITHOUT PRIOR NOTICE.
2) ALL UNITS ARE BEING TESTED AND COMPLY TO ISO 13253.
3) NOMINAL COOLING AND HEATING CAPACITY ARE BASED ON THE CONDITIONS BELOW :
COOLING - 27°C DB / 19°C WB INDOOR AND 35°C DB / 24°C WB OUTDOOR
4) EER/COP CALCULATION IS BASED ON EFFECTIVE POWER INPUT AS PER ISO 13253.

General Data - Heat Pump (R410A)

MODEL		INDOOR UNIT			A5CC 10CR	A5CC 15CR
		OUTDOOR UNIT			A5LC 10CR	A5LC 15CR
NOMINAL COOLING CAPACITY				Btu/h	9500	12500
				W	2780	3660
NOMINAL HEATING CAPACITY				Btu/h	9500	12000
				W	2780	3520
NOMINAL TOTAL INPUT POWER (COOLING)				W	961	1297
NOMINAL TOTAL INPUT POWER (HEATING)				W	813	1147
NOMINAL RUNNING CURRENT (COOLING)				A	4.3	5.7
NOMINAL RUNNING CURRENT (HEATING)				A	3.7	5.2
POWER SOURCE				V/Ph/Hz	220 - 240 / 1 / 50	220 - 240 / 1 / 50
EER				W/W	2.96	2.91
COP				W/W	3.52	3.18
REFRIGERANT TYPE					R410A	
REFRIGERANT CONTROL (EXPANSION DEVICE)					OUTDOOR CAP. TUBE	
INDOOR UNIT	CONTROL	AIR DISCHARGE			DUCTED	
		OPERATION			SLM WIRED HANDSET	
	AIR FLOW		HIGH	l/s / CFM	118 / 250	194 / 410
			MEDIUM	l/s / CFM	112 / 235	175 / 370
			LOW	l/s / CFM	100 / 210	118 / 250
	EXTERNAL STATIC PRESSURE (H/M/L)			Pa (in.wg.)	29 / 20 / 10 (0.12 / 0.08 / 0.04)	29 / 20 / 10 (0.12 / 0.08 / 0.04)
	SOUND PRESSURE LEVEL (H/M/L)			dBA	33 / 30 / 26	37 / 34 / 29
	UNIT DIMENSION		HEIGHT	mm/in	261 / 10.3	261 / 10.3
			WIDTH	mm/in	765 / 30.1	905 / 35.6
			DEPTH	mm/in	411 / 16.2	411 / 16.2
	PACKING DIMENSION		HEIGHT	mm/in	376 / 14.8	376 / 14.8
			WIDTH	mm/in	951 / 37.4	1091 / 43.0
			DEPTH	mm/in	541 / 21.3	541 / 21.3
	WEIGHT			kg/lb	17 / 38	21 / 46
	CONDENSATE DRAIN SIZE			mm/in	19.1 / 3/4	
OUTDOOR UNIT	AIR FLOW			l/s / CFM	396 / 840	453 / 960
	SOUND PRESSURE LEVEL			dBA	46	49
	UNIT DIMENSION		HEIGHT	mm/in	540 / 21.3	
			WIDTH	mm/in	700 / 27.6	
			DEPTH	mm/in	250 / 9.8	
	PACKING DIMENSION		HEIGHT	mm/in	620 / 24.4	
			WIDTH	mm/in	810 / 31.9	
			DEPTH	mm/in	330 / 13.0	
	UNIT WEIGHT			kg/lb	32 / 71	
	PIPE CONNECTION	TYPE			FLARE VALVE	
		SIZE	LIQUID	mm/in	6.4 / 1/4	6.4 / 1/4
			GAS	mm/in	9.5 / 3/8	12.7 / 1/2
REFRIGERANT CHARGE				kg/lb	0.71 / 1.57	0.94 / 2.07

1) ALL SPECIFICATIONS ARE SUBJECTED TO CHANGE BY THE MANUFACTURER WITHOUT PRIOR NOTICE.
2) ALL UNITS ARE BEING TESTED AND COMPLY TO ISO 13253.
3) NOMINAL COOLING AND HEATING CAPACITY ARE BASED ON THE CONDITIONS BELOW :
a) COOLING - 27°C DB / 19°C WB INDOOR AND 35°C DB / 24°C WB OUTDOOR
b) HEATING - 20°C DB INDOOR AND 7°C DB / 6°C WB OUTDOOR
4) EER/COP CALCULATION IS BASED ON EFFECTIVE POWER INPUT AS PER ISO 13253.

General Data - Heat Pump (R410A)

MODEL		INDOOR UNIT			A5CC 20CR	A5CC 25CR
		OUTDOOR UNIT			A5LC 20CR	A5LC 25CR
NOMINAL COOLING CAPACITY - 1Ø / <3Ø>				Btu/h	18000 / <18000>	21000 / <22860>
				W	5280 / <5280>	6155 / <6700>
NOMINAL HEATING CAPACITY - 1Ø / <3Ø>				Btu/h	18500 / <18500>	22000 / <23200>
				W	5420 / <5420>	6450 / <6800>
NOMINAL TOTAL INPUT POWER (COOLING) - 1Ø / <3Ø>				W	1757 / <1791>	2003 / <2274>
NOMINAL TOTAL INPUT POWER (HEATING) - 1Ø / <3Ø>				W	1597 / <1561>	1953 / <2167>
NOMINAL RUNNING CURRENT (COOLING) - 1Ø / <3Ø>				A	7.6 / <3.4>	8.9 / <4.2>
NOMINAL RUNNING CURRENT (HEATING) - 1Ø / <3Ø>				A	7.4 / <2.9>	8.8 / <4.0>
POWER SOURCE - 1Ø / <3Ø>				V/Ph/Hz	220 - 240 / 1 / 50 / <380 - 415 / 3 / 50>	
EER - 1Ø / <3Ø>				W/W	3.13 / <3.07>	3.15 / <3.02>
COP - 1Ø / <3Ø>				W/W	3.55 / <3.64>	3.39 / <3.22>
REFRIGERANT TYPE					R410A	
REFRIGERANT CONTROL (EXPANSION DEVICE)					OUTDOOR CAP. TUBE	
INDOOR UNIT	CONTROL	AIR DISCHARGE			DUCTED	
		OPERATION			SLM WIRED HANDSET	
	AIR FLOW	HIGH		l/s / CFM	270 / 570	326 / 690
		MEDIUM		l/s / CFM	264 / 558	312 / 660
		LOW		l/s / CFM	227 / 480	253 / 535
	EXTERNAL STATIC PRESSURE (H/M/L)			Pa (in.wg.)	29 / 20 / 10 (0.12 / 0.08 / 0.04)	29 / 20 / 10 (0.12 / 0.08 / 0.04)
	SOUND PRESSURE LEVEL (H/M/L)			dBA	38 / 36 / 34	40 / 39 / 36
	UNIT DIMENSION	HEIGHT		mm/in	261 / 10.3	261 / 10.3
		WIDTH		mm/in	1065 / 41.9	1200 / 47.2
		DEPTH		mm/in	411 / 16.2	411 / 16.2
	PACKING DIMENSION	HEIGHT		mm/in	376 / 14.8	376 / 14.8
		WIDTH		mm/in	1251 / 49.3	1386 / 54.6
		DEPTH		mm/in	541 / 21.3	541 / 21.3
	WEIGHT			kg/lb	22 / 49	25 / 55
	CONDENSATE DRAIN SIZE			mm/in	19.1 / 3/4	
OUTDOOR UNIT	AIR FLOW			l/s / CFM	614 / 1300	689 / 1460
	SOUND PRESSURE LEVEL			dBA	52	
	UNIT DIMENSION	HEIGHT		mm/in	654 / 25.7	756 / 29.8
		WIDTH		mm/in	855 / 33.7	855 / 33.7
		DEPTH		mm/in	328 / 12.9	328 / 12.9
	PACKING DIMENSION	HEIGHT		mm/in	710 / 28.0	810 / 31.9
		WIDTH		mm/in	990 / 39.0	990 / 39.0
		DEPTH		mm/in	415 / 16.3	415 / 16.3
	UNIT WEIGHT			kg/lb	59 / 130	62 / 137
	PIPE CONNECTION	TYPE			FLARE VALVE	
		SIZE	LIQUID	mm/in	6.4 / 1/4	6.4 / 1/4
			GAS	mm/in	12.7 / 1/2	15.9 / 5/8
REFRIGERANT CHARGE				kg/lb	1.38 / 3.04	1.60 / 3.53

1) ALL SPECIFICATIONS ARE SUBJECTED TO CHANGE BY THE MANUFACTURER WITHOUT PRIOR NOTICE.
2) ALL UNITS ARE BEING TESTED AND COMPLY TO ISO 13253.
3) NOMINAL COOLING AND HEATING CAPACITY ARE BASED ON THE CONDITIONS BELOW :
a) COOLING - 27°C DB / 19°C WB INDOOR AND 35°C DB / 24°C WB OUTDOOR
b) HEATING - 20°C DB INDOOR AND 7°C DB / 6°C WB OUTDOOR
4) EER/COP CALCULATION IS BASED ON EFFECTIVE POWER INPUT AS PER ISO 13253.

General Data - Heat pump (R410A)

MODEL					A5CC 28CR
		INDOOR UNIT			A5LC 28CR
NOMINAL COOLING CAPACITY - 1Ø / <3Ø>				Btu/h	26000 / <27000>
				W	7620 / <7910>
NOMINAL HEATING CAPACITY - 1Ø / <3Ø>				Btu/h	26000 / <28000>
				W	7620 / <8210>
NOMINAL TOTAL INPUT POWER (COOLING) - 1Ø / <3Ø>				W	2892 / <2876>
NOMINAL TOTAL INPUT POWER (HEATING) - 1Ø / <3Ø>				W	2429 / <2528>
NOMINAL RUNNING CURRENT (COOLING) - 1Ø / <3Ø>				A	12.8 / <4.9>
NOMINAL RUNNING CURRENT (HEATING) - 1Ø / <3Ø>				A	11.2 / <4.5>
POWER SOURCE - 1Ø / <3Ø>				V/Ph/Hz	220 - 240 / 1 / 50 / <380 - 415 / 3 / 50>
EER - 1Ø / <3Ø>				W/W	2.73 / <2.85>
COP - 1Ø / <3Ø>				W/W	3.27 / <3.38>
REFRIGERANT TYPE					R410A
REFRIGERANT CONTROL (EXPANSION DEVICE)					OUTDOOR CAP. TUBE
INDOOR UNIT	CONTROL	AIR DISCHARGE			DUCTED
		OPERATION			SLM WIRED HANDSET
	AIR FLOW	SUPER HIGH		l/s / CFM	401 / 850
		HIGH		l/s / CFM	382 / 810
		MEDIUM		l/s / CFM	363 / 770
		LOW		l/s / CFM	335 / 710
	EXTERNAL STATIC PRESSURE (H/M/L)			Pa (in.wg.)	98 / 78 / 68 / 59 (0.39 / 0.31 / 0.28 / 0.24)
	SOUND PRESSURE LEVEL (H/M/L)			dBA	44 / 41 / 38 / 34
	UNIT DIMENSION	HEIGHT		mm/in	285 / 11.2
		WIDTH		mm/in	1007 / 39.7
		DEPTH		mm/in	600 / 23.6
	PACKING DIMENSION	HEIGHT		mm/in	343 / 13.5
		WIDTH		mm/in	1138 / 44.8
		DEPTH		mm/in	690 / 27.2
	WEIGHT			kg/lb	38 / 84
	CONDENSATE DRAIN SIZE			mm/in	19.1 / 0.75
OUTDOOR UNIT	AIR FLOW			l/s / CFM	684 / 1450
	SOUND PRESSURE LEVEL			dBA	~~54~~ 58
	UNIT DIMENSION	HEIGHT		mm/in	756 / 29.8
		WIDTH		mm/in	855 / 33.7
		DEPTH		mm/in	328 / 12.9
	PACKING DIMENSION	HEIGHT		mm/in	810 / 31.9
		WIDTH		mm/in	990 / 39.0
		DEPTH		mm/in	415 / 16.3
	UNIT WEIGHT			kg/lb	68 / 150
	PIPE CONNECTION	TYPE			FLARE VALVE
		SIZE	LIQUID	mm/in	9.5 / 3/8
			GAS	mm/in	15.9 / 5/8
REFRIGERANT CHARGE				kg/lb	1.80 / 3.97

1) ALL SPECIFICATIONS ARE SUBJECTED TO CHANGE BY THE MANUFACTURER WITHOUT PRIOR NOTICE.
2) ALL UNITS ARE BEING TESTED AND COMPLY TO ISO 13253.
3) NOMINAL COOLING AND HEATING CAPACITY ARE BASED ON THE CONDITIONS BELOW :
a) COOLING - 27°C DB / 19°C WB INDOOR AND 35°C DB / 24°C WB OUTDOOR
b) HEATING - 20°C DB INDOOR AND 7°C DB / 6°C WB OUTDOOR
4) EER/COP CALCULATION IS BASED ON EFFECTIVE POWER INPUT AS PER ISO 13253.

General Data - Heat pump (R410A)

MODEL					A5CC 38CR	
		INDOOR UNIT				
		OUTDOOR UNIT			A5LC ~~35CR~~ 35DR	A5LC ~~40CR~~ 40DR
NOMINAL COOLING CAPACITY - 1Ø / <3Ø>				Btu/h	32000 / ~~<33000>~~ <32800>	39000 / <39000>
				W	9380 / ~~<9670>~~ <9610>	11430 / <11430>
NOMINAL HEATING CAPACITY - 1Ø / <3Ø>				Btu/h	~~34000 / <36000>~~ 33500 / <37000>	41000 / <41000>
				W	9960 / <10550>	12020 / <12020>
NOMINAL TOTAL INPUT POWER (COOLING) - 1Ø / <3Ø>				W	~~3287 / <3427>~~ 3050 / <3150>	~~4287 / <4287>~~ 4050 / <4050>
NOMINAL TOTAL INPUT POWER (HEATING) - 1Ø / <3Ø>				W	~~2987 / <3137>~~ 2750 / <2950>	~~3934 / <3934>~~ 3700 / <3700>
NOMINAL RUNNING CURRENT (COOLING) - 1Ø / <3Ø>				A	15.2 / <5.9>	<7.4>
NOMINAL RUNNING CURRENT (HEATING) - 1Ø / <3Ø>				A	14.0 / <5.5>	<7.0>
POWER SOURCE - 1Ø / <3Ø>				V/Ph/Hz	220 - 240 / 1 / 50 / <380 - 415 / 3 / 50>	
EER - 1Ø / <3Ø>				W/W	~~3.07 / <3.03>~~ 3.08 / <3.01>	2.82 / <2.82>
COP - 1Ø / <3Ø>				W/W	~~3.62 / <3.64>~~ 3.57 / <3.68>	3.25 / <3.25>
REFRIGERANT TYPE					R410A	
REFRIGERANT CONTROL (EXPANSION DEVICE)					OUTDOOR CAP. TUBE	
INDOOR UNIT	CONTROL	AIR DISCHARGE			DUCTED	
		OPERATION			SLM WIRED HANDSET	
	AIR FLOW	SUPER HIGH		l/s / CFM	604 / 1280	
		HIGH		l/s / CFM	547 / 1160	
		MEDIUM		l/s / CFM	496 / 1050	
		LOW		l/s / CFM	434 / 920	
	EXTERNAL STATIC PRESSURE (H/M/L)			Pa (in. wg.)	118 / 96 / 78 / 61	
	SOUND PRESSURE LEVEL (H/M/L)			dBA	52 / 49 / 48 / 45	
	UNIT DIMENSION	HEIGHT		mm/in	305 / 12.0	
		WIDTH		mm/in	1302 / 51.3	
		DEPTH		mm/in	638 / 25.1	
	PACKING DIMENSION	HEIGHT		mm/in	355 / 14.0	
		WIDTH		mm/in	1461 / 57.5	
		DEPTH		mm/in	727 / 28.6	
	WEIGHT			kg/lb	41 / 90	
	CONDENSATE DRAIN SIZE			mm/in	19.1 / 0.75	
OUTDOOR UNIT	AIR FLOW			l/s / CFM	1605 / 3400	
	SOUND PRESSURE LEVEL			dBA	58	
	UNIT DIMENSION	HEIGHT		mm/in	852 ~~850~~ / 33.5	
		WIDTH		mm/in	1030 / 40.6	
		DEPTH		mm/in	400 / 15.8	
	PACKING DIMENSION	HEIGHT		mm/in	1010 / 39.8 ~~1000 / 39.4~~	
		WIDTH		mm/in	1180 / 46.5 ~~1200 / 47.2~~	
		DEPTH		mm/in	514 / 20.2 ~~560 / 22.1~~	
	UNIT WEIGHT			kg/lb	~~95 / 209~~ 86 / 189	~~100 / 221~~ 95 / 209
	PIPE CONNECTION	TYPE			FLARE VALVE	
		SIZE	LIQUID	mm/in	9.5 / 3/8	
			GAS	mm/in	15.9 / 5/8	
REFRIGERANT CHARGE				kg/lb	2.6 / 5.73	2.175 / 4.80

1) ALL SPECIFICATIONS ARE SUBJECTED TO CHANGE BY THE MANUFACTURER WITHOUT PRIOR NOTICE.
2) ALL UNITS ARE BEING TESTED AND COMPLY TO ISO 13253.
3) NOMINAL COOLING AND HEATING CAPACITY ARE BASED ON THE CONDITIONS BELOW :
a) COOLING - 27°C DB / 19°C WB INDOOR AND 35°C DB / 24°C WB OUTDOOR
b) HEATING - 20°C DB INDOOR AND 7°C DB / 6°C WB OUTDOOR
4) EER/COP CALCULATION IS BASED ON EFFECTIVE POWER INPUT AS PER ISO 13253.

General Data - Heat pump (R410A)

MODEL					A5CC 50CR	A5CC 60CR
		INDOOR UNIT				
		OUTDOOR UNIT			A5LC ~~50CR~~ 50DR	A5LC ~~61CR~~ 61DR
NOMINAL COOLING CAPACITY				Btu/h	45000	55000
				W	13190 ~~13290~~	16120
NOMINAL HEATING CAPACITY				Btu/h	47000	55000
				W	13770	16120
NOMINAL TOTAL INPUT POWER (COOLING)				W	4600	5360
NOMINAL TOTAL INPUT POWER (HEATING)				W	4040	4730
NOMINAL RUNNING CURRENT (COOLING)				A	8.9	9.7
NOMINAL RUNNING CURRENT (HEATING)				A	8.2	9.7
POWER SOURCE				V/Ph/Hz	380 - 415 / 3 / 50	380 - 415 / 3 / 50
EER				W/W	2.87	3.01
COP				W/W	3.41	3.41
REFRIGERANT TYPE					R410A	
REFRIGERANT CONTROL (EXPANSION DEVICE)					~~OUTDOOR CAP. TUBE & TXV~~ OUTDOOR CAP. TUBE	
INDOOR UNIT	CONTROL	AIR DISCHARGE			DUCTED	
		OPERATION			SLM WIRED HANDSET	
	AIR FLOW	SUPER HIGH		l/s / CFM	675 / 1430	812 / 1720
		HIGH		l/s / CFM	623 / 1320	732 / 1550
		MEDIUM		l/s / CFM	580 / 1230	632 / 1340
		LOW		l/s / CFM	533 / 1130	552 / 1170
	EXTERNAL STATIC PRESSURE (H/M/L)			Pa (in.wg.)	147 / 126 / 109 / 92 (0.6 / 0.5 / 0.4 / 0.4)	147 / 120 / 90 / 69 (0.6 / 0.5 / 0.4 / 0.3)
	SOUND PRESSURE LEVEL (H/M/L)			dBA	54 / 53 / 52 / 51	54 / 52 / 50 / 46
	UNIT DIMENSION	HEIGHT		mm/in	378 / 14.9	378 / 14.9
		WIDTH		mm/in	1299 / 51.1	1499 / 59.0
		DEPTH		mm/in	541 / 21.3	541 / 21.3
	PACKING DIMENSION	HEIGHT		mm/in	415 / 16.3	415 / 16.3
		WIDTH		mm/in	1497 / 59.0	1701 / 67.0
		DEPTH		mm/in	631 / 24.8	631 / 24.8
	WEIGHT			kg/lb	54 / 119	62 / 137
	CONDENSATE DRAIN SIZE			mm/in	19.1 / 3/4	
OUTDOOR UNIT	AIR FLOW			l/s / CFM	2171 / 4600	2171 / 4600
	SOUND PRESSURE LEVEL			dBA	60	65
	UNIT DIMENSION	HEIGHT		mm/in	852 ~~850~~ / 33.5	852 ~~850~~ / 33.5
		WIDTH		mm/in	1030 / 40.6	1030 / 40.6
		DEPTH		mm/in	400 / 15.8	460 / 18.1
	PACKING DIMENSION	HEIGHT		mm/in	1010 / 39.8 ~~1000 / 39.4~~	1010 / 39.8 ~~1016 / 40.0~~
		WIDTH		mm/in	1180 / 46.5 ~~1200 / 47.2~~	1180 / 46.5 ~~1178 / 46.4~~
		DEPTH		mm/in	514 / 20.2 ~~560 / 22.1~~	514 / 20.2 ~~602 / 23.7~~
	UNIT WEIGHT			kg/lb	~~105 / 232~~ 98 / 216	~~108 / 238~~ 105 / 231
	PIPE CONNECTION	TYPE			FLARE VALVE	
		SIZE	LIQUID	mm/in	9.5 / 3/8	9.5 / 3/8
			GAS	mm/in	15.9 / 5/8	19.1 / 3/4
REFRIGERANT CHARGE				kg/lb	2.73 / 6.01	3.3 / 7.27

1) ALL SPECIFICATIONS ARE SUBJECTED TO CHANGE BY THE MANUFACTURER WITHOUT PRIOR NOTICE.
2) ALL UNITS ARE BEING TESTED AND COMPLY TO ISO 13253.
3) NOMINAL COOLING AND HEATING CAPACITY ARE BASED ON THE CONDITIONS BELOW :
a) COOLING - 27°C DB / 19°C WB INDOOR AND 35°C DB / 24°C WB OUTDOOR
b) HEATING - 20°C DB INDOOR AND 7°C DB / 6°C WB OUTDOOR
4) EER/COP CALCULATION IS BASED ON EFFECTIVE POWER INPUT AS PER ISO 13253.

General Data - Cooling Only (R22)(Low Static)

MODEL		INDOOR UNIT			ACC 10C	ACC 15C
		OUTDOOR UNIT			ALC 10C	ALC 15C
NOMINAL CAPACITY				Btu/h	9500	12300
				W	2780	3600
NOMINAL TOTAL INPUT POWER				W	894	1256
NOMINAL RUNNING CURRENT				A	4.0	5.7
POWER SOURCE				V/Ph/Hz	220 - 240 / 1 / 50	220 - 240 / 1 / 50
EER				W/W	3.15	2.91
REFRIGERANT TYPE					R22	
REFRIGERANT CONTROL (EXPANSION DEVICE)					OUTDOOR CAP. TUBE	
INDOOR UNIT	CONTROL	AIR DISCHARGE			DUCTED	
		OPERATION			SLM WIRED HANDSET	
	AIR FLOW	HIGH		l/s / CFM	142 / 300	255 / 540
		MEDIUM		l/s / CFM	130 / 275 ~~118 / 250~~	222 / 470
		LOW		l/s / CFM	107 / 225 ~~99 / 210~~	165 / 350
	EXTERNAL STATIC PRESSURE (H/M/L)			Pa (in.wg.)	20 / 10 / 5 (0.08 / 0.04 / 0.02))	20 / 10 / 5 (0.0.08 / 0.04 / 0.02)
	SOUND PRESSURE LEVEL (H/M/L)			dBA	31 / 28 / 25	33 / 30 / 25
	UNIT DIMENSION	HEIGHT		mm/in	261 / 10.3	261 / 10.3
		WIDTH		mm/in	765 / 30.1	905 / 35.6
		DEPTH		mm/in	411 / 16.2	411 / 16.2
	PACKING DIMENSION	HEIGHT		mm/in	376 / 14.8	376 / 14.8
		WIDTH		mm/in	951 / 37.4	1091 / 43.0
		DEPTH		mm/in	541 / 21.3	541 / 21.3
	WEIGHT			kg/lb	17 / 38	21 / 46
	CONDENSATE DRAIN SIZE			mm/in	19.1 / 3/4	
OUTDOOR UNIT	AIR FLOW			l/s / CFM	396 / 840	453 / 960
	SOUND PRESSURE LEVEL			dBA	46	49
	UNIT DIMENSION	HEIGHT		mm/in	540 / 21.3	
		WIDTH		mm/in	700 / 27.6	
		DEPTH		mm/in	250 / 9.8	
	PACKING DIMENSION	HEIGHT		mm/in	620 / 24.4	
		WIDTH		mm/in	810 / 31.9	
		DEPTH		mm/in	330 / 13.0	
	UNIT WEIGHT			kg/lb	32 / 71	
	PIPE CONNECTION	TYPE			FLARE VALVE	
		SIZE	LIQUID	mm/in	6.4 / 1/4	6.4 / 1/4
			GAS	mm/in	9.5 / 3/8	12.7 / 1/2
REFRIGERANT CHARGE				kg/lb	0.63 / 1.39	0.60 / 1.32

1) ALL SPECIFICATIONS ARE SUBJECTED TO CHANGE BY THE MANUFACTURER WITHOUT PRIOR NOTICE.
2) ALL UNITS ARE BEING TESTED AND COMPLY TO ISO 13253.
3) NOMINAL COOLING AND HEATING CAPACITY ARE BASED ON THE CONDITIONS BELOW :
COOLING - 27°C DB / 19°C WB INDOOR AND 35°C DB / 24°C WB OUTDOOR
4) EER/COP CALCULATION IS BASED ON EFFECTIVE POWER INPUT AS PER ISO 13253.

General Data - Cooling Only (R22)(Low Static)

MODEL		INDOOR UNIT			ACC 20C	
		OUTDOOR UNIT			ALC 18C	ALC 20C
NOMINAL CAPACITY				Btu/h	18000	19000
				W	5280	5570
NOMINAL TOTAL INPUT POWER				W	1894	1879
NOMINAL RUNNING CURRENT				A	8.5	8.3
POWER SOURCE				V/Ph/Hz	220 - 240 / 1 / 50	220 - 240 / 1 / 50
EER				W/W	2.87	3.05
REFRIGERANT TYPE					R22	
REFRIGERANT CONTROL (EXPANSION DEVICE)					OUTDOOR CAP. TUBE	
INDOOR UNIT	CONTROL	AIR DISCHARGE			DUCTED	
		OPERATION			SLM WIRED HANDSET	
	AIR FLOW	HIGH		l/s / CFM	307 / 650	
		MEDIUM		l/s / CFM	303 / 640	
		LOW		l/s / CFM	269 / 570	
	EXTERNAL STATIC PRESSURE (H/M/L)			Pa (in.wg.)	29 / 20 / 10 (0.12 / 0.08 / 0.04)	
	SOUND PRESSURE LEVEL (H/M/L)			dBA	38 / 37 / 33	
	UNIT DIMENSION	HEIGHT		mm/in	261 / 10.3	
		WIDTH		mm/in	1065 / 41.9	
		DEPTH		mm/in	411 / 16.2	
	PACKING DIMENSION	HEIGHT		mm/in	376 / 14.8	
		WIDTH		mm/in	1251 / 49.3	
		DEPTH		mm/in	541 / 21.3	
	WEIGHT			kg/lb	22 / 49	
	CONDENSATE DRAIN SIZE			mm/in	19.1 / 3/4	
OUTDOOR UNIT	AIR FLOW			l/s / CFM	614 / 1300	
	SOUND PRESSURE LEVEL			dBA	51	
	UNIT DIMENSION	HEIGHT		mm/in	654 / 25.7	
		WIDTH		mm/in	855 / 33.7	
		DEPTH		mm/in	328 / 12.9	
	PACKING DIMENSION	HEIGHT		mm/in	710 / 28.0	
		WIDTH		mm/in	990 / 39.0	
		DEPTH		mm/in	415 / 16.3	
	UNIT WEIGHT			kg/lb	57 / 126	59 / 130
	PIPE CONNECTION	TYPE			FLARE VALVE	
		SIZE	LIQUID	mm/in	6.4 / 1/4	
			GAS	mm/in	15.9 / 5/8	
REFRIGERANT CHARGE				kg/lb	1.60 / 3.53	1.35 / 2.98

1) ALL SPECIFICATIONS ARE SUBJECTED TO CHANGE BY THE MANUFACTURER WITHOUT PRIOR NOTICE.
2) ALL UNITS ARE BEING TESTED AND COMPLY TO ISO 13253.
3) NOMINAL COOLING AND HEATING CAPACITY ARE BASED ON THE CONDITIONS BELOW :
COOLING - 27°C DB / 19°C WB INDOOR AND 35°C DB / 24°C WB OUTDOOR
4) EER/COP CALCULATION IS BASED ON EFFECTIVE POWER INPUT AS PER ISO 13253.

General Data - Cooling Only (R22)(Low Static)

MODEL		INDOOR UNIT			ACC 25C
		OUTDOOR UNIT			ALC 25C
NOMINAL CAPACITY				Btu/h	23500
				W	6890
NOMINAL TOTAL INPUT POWER				W	2589
NOMINAL RUNNING CURRENT				A	11.7
POWER SOURCE				V/Ph/Hz	220 - 240 / 1 / 50
EER				W/W	2.69
REFRIGERANT TYPE					R22
REFRIGERANT CONTROL (EXPANSION DEVICE)					OUTDOOR CAP. TUBE
INDOOR UNIT	CONTROL	AIR DISCHARGE			DUCTED
		OPERATION			SLM WIRED HANDSET
	AIR FLOW	HIGH		l/s / CFM	363 / 770
		MEDIUM		l/s / CFM	340 / 720
		LOW		l/s / CFM	274 / 580
	EXTERNAL STATIC PRESSURE (H/M/L)			Pa (in.wg.)	25 / 15 / 5 (0.10 / 0.06 / 0.02)
	SOUND PRESSURE LEVEL (H/M/L)			dBA	39 / 38 / 33
	UNIT DIMENSION	HEIGHT		mm/in	261 / 10.3
		WIDTH		mm/in	1200 / 47.2
		DEPTH		mm/in	411 / 16.2
	PACKING DIMENSION	HEIGHT		mm/in	376 / 14.8
		WIDTH		mm/in	1386 / 54.6
		DEPTH		mm/in	541 / 21.3
	WEIGHT			kg/lb	25 / 55
	CONDENSATE DRAIN SIZE			mm/in	19.1 / 3/4
OUTDOOR UNIT	AIR FLOW			l/s / CFM	755 / 1600
	SOUND PRESSURE LEVEL			dBA	52
	UNIT DIMENSION	HEIGHT		mm/in	756 / 29.8
		WIDTH		mm/in	855 / 33.7
		DEPTH		mm/in	328 / 12.9
	PACKING DIMENSION	HEIGHT		mm/in	810 / 31.9
		WIDTH		mm/in	990 / 39.0
		DEPTH		mm/in	415 / 16.3
	UNIT WEIGHT			kg/lb	62 / 137
	PIPE CONNECTION	TYPE			FLARE VALVE
		SIZE	LIQUID	mm/in	9.5 / 3/8
			GAS	mm/in	15.9 / 5/8
REFRIGERANT CHARGE				kg/lb	1.50 / 3.31

1) ALL SPECIFICATIONS ARE SUBJECTED TO CHANGE BY THE MANUFACTURER WITHOUT PRIOR NOTICE.
2) ALL UNITS ARE BEING TESTED AND COMPLY TO ISO 13253.
3) NOMINAL COOLING AND HEATING CAPACITY ARE BASED ON THE CONDITIONS BELOW :
COOLING - 27°C DB / 19°C WB INDOOR AND 35°C DB / 24°C WB OUTDOOR
4) EER/COP CALCULATION IS BASED ON EFFECTIVE POWER INPUT AS PER ISO 13253.

General Data - Cooling Only (R22)(Low Static)

MODEL		INDOOR UNIT			ACC 30C	
		OUTDOOR UNIT			ALC 28C	ALC ~~30C~~ 30D
NOMINAL CAPACITY - 1Ø / <3Ø>				Btu/h	28000	29000 / <29000>
				W	8206	8493 / <8493>
NOMINAL TOTAL INPUT POWER - 1Ø / <3Ø>				W	3124	2770 / <2826>
NOMINAL RUNNING CURRENT - 1Ø / <3Ø>				A	15.50	13.1 / <5.49>
POWER SOURCE - 1Ø / <3Ø>				V/Ph/Hz	220 - 240 / 1 / 50 / <380 - 415 / 3 / 50>	
EER - 1Ø / <3Ø>				W/W	2.67	3.13 / <3.06>
REFRIGERANT TYPE					R22	
REFRIGERANT CONTROL (EXPANSION DEVICE)					INDOOR CAP. TUBE	
INDOOR UNIT	CONTROL	AIR DISCHARGE			DUCTED	
		OPERATION			SLM WIRED HANDSET	
	AIR FLOW	SUPER HIGH		l/s / CFM	444 / 940	
		HIGH		l/s / CFM	415 / 880	
		MEDIUM		l/s / CFM	373 / 790	
		LOW		l/s / CFM	349 / 740	
	EXTERNAL STATIC PRESSURE (SH/H/M/L)			Pa (in.wg.)	49 / 39 / 29 / 20 (0.20 / 0.16 / 0.12 / 0.08)	
	SOUND PRESSURE LEVEL (SH/H/M/L)			dBA	41 / 40 / 39 / 36	
	UNIT DIMENSION	HEIGHT		mm/in	378 / 14.9	
		WIDTH		mm/in	929 / 36.6	
		DEPTH		mm/in	541 / 21.3	
	PACKING DIMENSION	HEIGHT		mm/in	415 / 16.3	
		WIDTH		mm/in	1126 / 44.3	
		DEPTH		mm/in	631 / 24.8	
	WEIGHT			kg/lb	39 / 86	
	CONDENSATE DRAIN SIZE			mm/in	19.1 / 3/4	
OUTDOOR UNIT	AIR FLOW			l/s / CFM	741 / 1570	1605 / 3400
	SOUND PRESSURE LEVEL			dBA	~~54~~ 58	58
	UNIT DIMENSION	HEIGHT		mm/in	756 / 29.8	852 ~~850~~ / 33.5
		WIDTH		mm/in	855 / 33.7	1030 / 40.6
		DEPTH		mm/in	328 / 12.9	400 / 15.8
	PACKING DIMENSION	HEIGHT		mm/in	810 / 31.9	1010 / 39.8 ~~1000 / 39.4~~
		WIDTH		mm/in	990 / 39.0	1180 / 46.5 ~~1200 / 47.2~~
		DEPTH		mm/in	415 / 16.3	514 / 20.2 ~~560 / 22.1~~
	UNIT WEIGHT			kg/lb	68 / 150	95 / 209
	PIPE CONNECTION	TYPE			FLARE VALVE	
		SIZE	LIQUID	mm/in	9.5 / 3/8	
			GAS	mm/in	15.9 / 5/8	
REFRIGERANT CHARGE				kg/lb	2.40 / 5.30	1.70 / 3.75

1) ALL SPECIFICATIONS ARE SUBJECTED TO CHANGE BY THE MANUFACTURER WITHOUT PRIOR NOTICE.
2) ALL UNITS ARE BEING TESTED AND COMPLY TO ISO 13253.
3) NOMINAL COOLING AND HEATING CAPACITY ARE BASED ON THE CONDITIONS BELOW :
COOLING - 27°C DB / 19°C WB INDOOR AND 35°C DB / 24°C WB OUTDOOR
4) EER/COP CALCULATION IS BASED ON EFFECTIVE POWER INPUT AS PER ISO 13253.

General Data - Cooling Only (R22)(Low Static)

MODEL		INDOOR UNIT			ACC 40C	
		OUTDOOR UNIT			ALC ~~35C~~ 35D	ALC ~~40C~~ 40D
NOMINAL CAPACITY - 1Ø / <3Ø>				Btu/h	33500	38500 / <38500>
				W	9811	11276 / <11276>
NOMINAL TOTAL INPUT POWER - 1Ø / <3Ø>				W	3350	3500 / <3450>
NOMINAL RUNNING CURRENT - 1Ø / <3Ø>				A	16.40	18.50 / <5.90>
POWER SOURCE - 1Ø / <3Ø>				V/Ph/Hz	220 - 240 / 1 / 50 / <380 - 415 / 3 / 50>	
EER - 1Ø / <3Ø>				W/W	2.99	3.28 / <3.33>
REFRIGERANT TYPE					R22	
REFRIGERANT CONTROL (EXPANSION DEVICE)					INDOOR CAP. TUBE	
INDOOR UNIT	CONTROL	AIR DISCHARGE			DUCTED	
		OPERATION			SLM WIRED HANDSET	
	AIR FLOW	SUPER HIGH		l/s / CFM	562 / 1190	
		HIGH		l/s / CFM	500 / 1060	
		MEDIUM		l/s / CFM	472 / 1000	
		LOW		l/s / CFM	458 / 970	
	EXTERNAL STATIC PRESSURE (SH/H/M/L)			Pa (in.wg.)	49 / 39 / 29 / 20 (0.20 / 0.16 / 0.12 / 0.08)	
	SOUND PRESSURE LEVEL (SH/H/M/L)			dBA	43 / 41 / 40 / 38	
	UNIT DIMENSION	HEIGHT		mm/in	378 / 14.9	
		WIDTH		mm/in	1045 / 41.1	
		DEPTH		mm/in	541 / 21.3	
	PACKING DIMENSION	HEIGHT		mm/in	415 / 16.3	
		WIDTH		mm/in	1245 / 49.0	
		DEPTH		mm/in	631 / 24.8	
	WEIGHT			kg/lb	42 / 93	
	CONDENSATE DRAIN SIZE			mm/in	19.1 / 3/4	
OUTDOOR UNIT	AIR FLOW			l/s / CFM	1605 / 3400	1605 / 3400
	SOUND PRESSURE LEVEL			dBA	58	58
	UNIT DIMENSION	HEIGHT		mm/in	852 ~~850~~ / 33.5	
		WIDTH		mm/in	1030 / 40.6	
		DEPTH		mm/in	400 / 15.8	
	PACKING DIMENSION	HEIGHT		mm/in	1010 / 39.8 ~~1000 / 39.4~~	
		WIDTH		mm/in	1180 / 46.5 ~~1200 / 47.2~~	
		DEPTH		mm/in	514 / 20.2 ~~560 / 22.1~~	
	UNIT WEIGHT			kg/lb	95 / 209	100 / 221
	PIPE CONNECTION	TYPE			FLARE VALVE	
		SIZE	LIQUID	mm/in	9.5 / 3/8	
			GAS	mm/in	19.1 / 3/4	
REFRIGERANT CHARGE				kg/lb	1.90 / 4.19	2.40 / 5.29

1) ALL SPECIFICATIONS ARE SUBJECTED TO CHANGE BY THE MANUFACTURER WITHOUT PRIOR NOTICE.
2) ALL UNITS ARE BEING TESTED AND COMPLY TO ISO 13253.
3) NOMINAL COOLING AND HEATING CAPACITY ARE BASED ON THE CONDITIONS BELOW :
COOLING - 27°C DB / 19°C WB INDOOR AND 35°C DB / 24°C WB OUTDOOR
4) EER/COP CALCULATION IS BASED ON EFFECTIVE POWER INPUT AS PER ISO 13253.

General Data - Cooling Only (R22)(Low Static)

MODEL					ACC 50C	ACC 60C
		INDOOR UNIT				
		OUTDOOR UNIT			ALC ~~50C~~ 50D	ALC ~~61C~~ 61D
NOMINAL CAPACITY				Btu/h	~~47000~~ 48000	56000 / 55100*
				W	~~13765~~ 14100	16410 / 16150*
NOMINAL TOTAL INPUT POWER				W	4883	5880 / 6673*
NOMINAL RUNNING CURRENT				A	8.6	10.0 / 11.0*
POWER SOURCE				V/Ph/Hz	380 - 415 / 3 / 50	380 - 415 / 3 / 50
EER				W/W	2.9	2.85 / 2.42*
REFRIGERANT TYPE					R22	
REFRIGERANT CONTROL (EXPANSION DEVICE)					INDOOR CAP. TUBE	
INDOOR UNIT	CONTROL	AIR DISCHARGE			DUCTED	
		OPERATION			SLM WIRED HANDSET	
	AIR FLOW	SUPER HIGH		l/s / CFM	713 / 1510	802 / 1700
		HIGH		l/s / CFM	628 / 1330	765 / 1620
		MEDIUM		l/s / CFM	618 / 1310	717 / 1520
		LOW		l/s / CFM	599 / 1270	693 / 1470
	EXTERNAL STATIC PRESSURE (SH/H/M/L)			Pa (in.wg.)	78 / 59 / 39 / 20 (0.31 / 0.24 / 0.16 / 0.08)	69 / 49 / 29 / 20 (0.28 / 0.20 / 0.12 / 0.08)
	SOUND PRESSURE LEVEL (SH/H/M/L)			dBA	46 / 44 / 43 / 42	48 / 47 / 46 / 45
	UNIT DIMENSION	HEIGHT		mm/in	378 / 14.9	378 / 14.9
		WIDTH		mm/in	1299 / 51.1	1499 / 59.0
		DEPTH		mm/in	541 / 21.3	541 / 21.3
	PACKING DIMENSION	HEIGHT		mm/in	415 / 16.3	415 / 16.3
		WIDTH		mm/in	1497 / 59.0	1701 / 67.0
		DEPTH		mm/in	631 / 24.8	631 / 24.8
	WEIGHT			kg/lb	54 / 119	62 / 137
	CONDENSATE DRAIN SIZE			mm/in	19.1 / 3/4	
OUTDOOR UNIT	AIR FLOW			l/s / CFM	1605 / 3400	1793 / 3800
	SOUND PRESSURE LEVEL			dBA	58	61
	UNIT DIMENSION	HEIGHT		mm/in	852 ~~850~~ / 33.5	852 ~~850~~ / 33.5
		WIDTH		mm/in	1030 / 40.6	1030 / 40.6
		DEPTH		mm/in	400 / 15.8	460 / 18.1
	PACKING DIMENSION	HEIGHT		mm/in	1010 / 39.8 ~~1000 / 39.4~~	1010 / 39.8 ~~1016 / 40.0~~
		WIDTH		mm/in	1180 / 46.5 ~~1200 / 47.2~~	1180 / 46.5 ~~1178 / 46.4~~
		DEPTH		mm/in	514 / 20.2 ~~560 / 22.1~~	514 / 20.2 ~~602 / 23.7~~
	UNIT WEIGHT			kg/lb	105 / 232	108 / 238
	PIPE CONNECTION	TYPE			FLARE VALVE	
		SIZE	LIQUID	mm/in	9.5 / 3/8	12.7 / 1/2
			GAS	mm/in	19.1 / 3/4	19.1 / 3/4
REFRIGERANT CHARGE				kg/lb	3.15 / 6.94	5.00 / 11.02 /4.80/10.58*

1) ALL SPECIFICATIONS ARE SUBJECTED TO CHANGE BY THE MANUFACTURER WITHOUT PRIOR NOTICE.
2) ALL SPECIFICATIONS ARE BEING TESTED AND COMPLY TO ISO 13253.
3) NOMINAL COOLING AND HEATING CAPACITY ARE BASED ON THE CONDITIONS BELOW :
COOLING - 27°C DB / 19°C WB INDOOR AND 35°C DB / 24°C WB OUTDOOR
4) EER/COP CALCULATION IS BASED ON EFFECTIVE POWER INPUT AS PER ISO 13253.
*5) *DATA REFER TO INDOOR COUPLED WITH MLC61D-xxYxx.*

General Data - Heat pump (R22)(Low Static)

MODEL		INDOOR UNIT			ACC 10CR	ACC 15CR
		OUTDOOR UNIT			ALC 10CR	ALC 15CR
NOMINAL COOLING CAPACITY				Btu/h	9500	12300
				W	2780	3600
NOMINAL HEATING CAPACITY				Btu/h	9500	12300
				W	2780	3515
NOMINAL TOTAL INPUT POWER (COOLING)				W	894	1256
NOMINAL TOTAL INPUT POWER (HEATING)				W	784	1051
NOMINAL RUNNING CURRENT (COOLING)				A	4.0	5.7
NOMINAL RUNNING CURRENT (HEATING)				A	3.5	4.8
POWER SOURCE				V/Ph/Hz	220 - 240 / 1 / 50	220 - 240 / 1 / 50
EER				W/W	3.15	2.91
COP				W/W	3.59	3.40
REFRIGERANT TYPE					R22	
REFRIGERANT CONTROL (EXPANSION DEVICE)					OUTDOOR CAP. TUBE	
INDOOR UNIT	CONTROL	AIR DISCHARGE			DUCTED	
		OPERATION			SLM WIRED HANDSET	
	AIR FLOW	HIGH		l/s / CFM	142 / 300	255 / 540 ~~241 / 510~~
		MEDIUM		l/s / CFM	130 / 275 ~~123 / 260~~	222 / 470 ~~208 / 440~~
		LOW		l/s / CFM	107 / 225 ~~104 / 220~~	165 / 350 ~~170 / 360~~
	EXTERNAL STATIC PRESSURE (H/M/L)			Pa (in.wg.)	20 / 10 / 5 (0.08 / 0.04 / 0.02)	20 / 10 / 5 (0.08 / 0.04 / 0.02)
	SOUND PRESSURE LEVEL (H/M/L)			dBA	33 / 30 / 26	37 / 34 / 29
	UNIT DIMENSION	HEIGHT		mm/in	261 / 10.3	261 / 10.3
		WIDTH		mm/in	765 / 30.1	905 / 35.6
		DEPTH		mm/in	411 / 16.2	411 / 16.2
	PACKING DIMENSION	HEIGHT		mm/in	376 / 14.8	376 / 14.8
		WIDTH		mm/in	951 / 37.4	1091 / 43.0
		DEPTH		mm/in	541 / 21.3	541 / 21.3
	WEIGHT			kg/lb	17 / 38	21 / 46.3
	CONDENSATE DRAIN SIZE			mm/in	19.1 / 3/4	
OUTDOOR UNIT	AIR FLOW			l/s / CFM	396 / 840	453 / 960
	SOUND PRESSURE LEVEL			dBA	46	49
	UNIT DIMENSION	HEIGHT		mm/in	540 / 21.3	
		WIDTH		mm/in	700 / 27.6	
		DEPTH		mm/in	250 / 9.8	
	PACKING DIMENSION	HEIGHT		mm/in	620 / 24.4	
		WIDTH		mm/in	810 / 31.9	
		DEPTH		mm/in	330 / 13.0	
	UNIT WEIGHT			kg/lb	32 / 71	
	PIPE CONNECTION	TYPE			FLARE VALVE	
		SIZE	LIQUID	mm/in	6.4 / 1/4	6.4 / 1/4
			GAS	mm/in	9.5 / 3/8	12.7 / 1/2
REFRIGERANT CHARGE				kg/lb	0.63 / 1.39	0.60 / 1.32

1) ALL SPECIFICATIONS ARE SUBJECTED TO CHANGE BY THE MANUFACTURER WITHOUT PRIOR NOTICE.
2) ALL UNITS ARE BEING TESTED AND COMPLY TO ISO 13253.
3) NOMINAL COOLING AND HEATING CAPACITY ARE BASED ON THE CONDITIONS BELOW :
a) COOLING - 27°C DB / 19°C WB INDOOR AND 35°C DB / 24°C WB OUTDOOR
b) HEATING - 20°C DB INDOOR AND 7°C DB / 6°C WB OUTDOOR
4) EER/COP CALCULATION IS BASED ON EFFECTIVE POWER INPUT AS PER ISO 13253.

General Data - Heat pump (R22)(Low Static)

MODEL				INDOOR UNIT	ACC 20CR	
				OUTDOOR UNIT	ALC 18CR	ALC 20CR
NOMINAL COOLING CAPACITY			Btu/h		18000	19000
			W		5280	5570
NOMINAL HEATING CAPACITY			Btu/h		18500	19800
			W		5420	5800
NOMINAL TOTAL INPUT POWER (COOLING)			W		1894	1879
NOMINAL TOTAL INPUT POWER (HEATING)			W		1734	1829
NOMINAL RUNNING CURRENT (COOLING)			A		8.5	8.3
NOMINAL RUNNING CURRENT (HEATING)			A		7.8	8.1
POWER SOURCE			V/Ph/Hz		220 - 240 / 1 / 50	220 - 240 / 1 / 50
EER			W/W		2.81	2.99
COP			W/W		3.16	3.20
REFRIGERANT TYPE					R22	
REFRIGERANT CONTROL (EXPANSION DEVICE)					OUTDOOR CAP. TUBE	
INDOOR UNIT	CONTROL	AIR DISCHARGE			DUCTED	
		OPERATION			SLM WIRED HANDSET	
	AIR FLOW	HIGH	l/s / CFM		307 / 650	
		MEDIUM	l/s / CFM		303 / 640	
		LOW	l/s / CFM		269 / 570	
	EXTERNAL STATIC PRESSURE (H/M/L)		Pa (in.wg.)		29 / 20 / 10 (0.12 / 0.08 / 0.04)	
	SOUND PRESSURE LEVEL (H/M/L)		dBA		~~38 / 31 / 33~~ 38 / 37 / 33	
	UNIT DIMENSION	HEIGHT	mm/in		261 / 10.3	
		WIDTH	mm/in		1065 / 41.9	
		DEPTH	mm/in		411 / 16.2	
	PACKING DIMENSION	HEIGHT	mm/in		376 / 14.8	
		WIDTH	mm/in		1251 / 49.3	
		DEPTH	mm/in		541 / 21.3	
	WEIGHT		kg/lb		22 / 49	
	CONDENSATE DRAIN SIZE		mm/in		19.1 / 3/4	
OUTDOOR UNIT	AIR FLOW		l/s / CFM		614 / 1300	
	SOUND PRESSURE LEVEL		dBA		51	
	UNIT DIMENSION	HEIGHT	mm/in		654 / 25.7	
		WIDTH	mm/in		855 / 33.7	
		DEPTH	mm/in		328 / 12.9	
	PACKING DIMENSION	HEIGHT	mm/in		810 / 31.9	
		WIDTH	mm/in		990 / 39.0	
		DEPTH	mm/in		415 / 16.3	
	UNIT WEIGHT		kg/lb		~~57 / 126~~	59 / 130
	PIPE CONNECTION	TYPE			FLARE VALVE	
		SIZE LIQUID	mm/in		6.4 / 1/4	
		SIZE GAS	mm/in		15.9 / 5/8	
REFRIGERANT CHARGE			kg/lb		~~1.60 / 3.53~~	1.35 / 2.98

1) ALL SPECIFICATIONS ARE SUBJECTED TO CHANGE BY THE MANUFACTURER WITHOUT PRIOR NOTICE.
2) ALL UNITS ARE BEING TESTED AND COMPLY TO ISO 13253.
3) NOMINAL COOLING AND HEATING CAPACITY ARE BASED ON THE CONDITIONS BELOW :
a) COOLING - 27°C DB / 19°C WB INDOOR AND 35°C DB / 24°C WB OUTDOOR
b) HEATING - 20°C DB INDOOR AND 7°C DB / 6°C WB OUTDOOR
4) EER/COP CALCULATION IS BASED ON EFFECTIVE POWER INPUT AS PER ISO 13253.

General Data - Heat pump (R22) (Low Static)

MODEL		INDOOR UNIT		ACC 25CR
		OUTDOOR UNIT		ALC 25CR
NOMINAL COOLING CAPACITY			Btu/h	23500
			W	6890
NOMINAL HEATING CAPACITY			Btu/h	24000
			W	7030
NOMINAL TOTAL INPUT POWER (COOLING)			W	2589
NOMINAL TOTAL INPUT POWER (HEATING)			W	2509
NOMINAL RUNNING CURRENT (COOLING)			A	11.7
NOMINAL RUNNING CURRENT (HEATING)			A	11.5
POWER SOURCE			V/Ph/Hz	220 - 240 / 1 / 50
EER			W/W	~~2.67~~ 2.69
COP			W/W	2.84
REFRIGERANT TYPE				R22
REFRIGERANT CONTROL (EXPANSION DEVICE)				OUTDOOR CAP. TUBE
INDOOR UNIT	CONTROL	AIR DISCHARGE		DUCTED
		OPERATION		SLM WIRED HANDSET
	AIR FLOW	HIGH	l/s / CFM	363 / 770
		MEDIUM	l/s / CFM	340 / 720
		LOW	l/s / CFM	274 / 580
	EXTERNAL STATIC PRESSURE (H/M/L)		Pa (in.wg.)	25 / 15 / 5 (0.10 / 0.06 / 0.02)
	SOUND PRESSURE LEVEL (H/M/L)		dBA	~~40 / 39 / 36~~ 39 / 38 / 33
	UNIT DIMENSION	HEIGHT	mm/in	261 / 10.3
		WIDTH	mm/in	1200 / 47.2
		DEPTH	mm/in	411 / 16.2
	PACKING DIMENSION	HEIGHT	mm/in	376 / 14.8
		WIDTH	mm/in	1386 / 54.6
		DEPTH	mm/in	541 / 21.3
	WEIGHT		kg/lb	25 / 55
	CONDENSATE DRAIN SIZE		mm/in	19.1 / 3/4
OUTDOOR UNIT	AIR FLOW		l/s / CFM	755 / 1600
	SOUND PRESSURE LEVEL		dBA	52
	UNIT DIMENSION	HEIGHT	mm/in	756 / 29.8
		WIDTH	mm/in	855 / 33.7
		DEPTH	mm/in	328 / 12.9
	PACKING DIMENSION	HEIGHT	mm/in	810 / 31.9
		WIDTH	mm/in	990 / 39.0
		DEPTH	mm/in	415 / 16.3
	UNIT WEIGHT		kg/lb	62 / 137
	PIPE CONNECTION	TYPE		FLARE VALVE
		SIZE LIQUID	mm/in	9.5 / 3/8
		SIZE GAS	mm/in	15.9 / 5/8
REFRIGERANT CHARGE			kg/lb	1.50 / 3.31

1) ALL SPECIFICATIONS ARE SUBJECTED TO CHANGE BY THE MANUFACTURER WITHOUT PRIOR NOTICE.
2) ALL UNITS ARE BEING TESTED AND COMPLY TO ISO 13253.
3) NOMINAL COOLING AND HEATING CAPACITY ARE BASED ON THE CONDITIONS BELOW :
a) COOLING - 27°C DB / 19°C WB INDOOR AND 35°C DB / 24°C WB OUTDOOR
b) HEATING - 20°C DB INDOOR AND 7°C DB / 6°C WB OUTDOOR
4) EER/COP CALCULATION IS BASED ON EFFECTIVE POWER INPUT AS PER ISO 13253.

General Data - Heat pump (R22) (Low Static)

MODEL	INDOOR UNIT			ACC 30CR	
	OUTDOOR UNIT			ALC 28CR	ALC ~~30CR~~ 30DR
NOMINAL COOLING CAPACITY- 1Ø / <3Ø>			Btu/h	28000	30000 / <30000>
			W	8602	8792 / <8792>
NOMINAL HEATING CAPACITY- 1Ø / <3Ø>			Btu/h	29000	30000 / <30000>
			W	8499	8792 / <8792>
NOMINAL TOTAL INPUT POWER (COOLING) - 1Ø / <3Ø>			W	3124	3116 / <3096>
NOMINAL TOTAL INPUT POWER (HEATING) - 1Ø / <3Ø>			W	2700	3086 / <3066>
NOMINAL RUNNING CURRENT (COOLING) - 1Ø / <3Ø>			A	15.5	15.0 / <5.2>
NOMINAL RUNNING CURRENT (HEATING) - 1Ø / <3Ø>			A	13.8	14.9 / <5.1>
POWER SOURCE - 1Ø / <3Ø>			V/Ph/Hz	220 - 240 / 1 / 50 / <380 - 415 / 3 / 50>	
EER - 1Ø / <3Ø>			W/W	2.67	2.87 / <2.89>
COP - 1Ø / <3Ø>			W/W	3.21	2.90 / <2.92>
REFRIGERANT TYPE / CONTROL				R22	R22
REFRIGERANT CONTROL (EXPANSION DEVICE)				OUTDOOR CAP. TUBE	OUTDOOR CAP. TUBE + TXV
INDOOR UNIT	CONTROL	AIR DISCHARGE		DUCTED	
		OPERATION		SLM WIRED HANDSET	
	AIR FLOW	SUPER HIGH	l/s / CFM	444 / 940	
		HIGH	l/s / CFM	415 / 880	
		MEDIUM	l/s / CFM	373 / 790	
		LOW	l/s / CFM	349 / 740	
	EXTERNAL STATIC PRESSURE (H/M/L)		Pa (in.wg.)	49 / 39 / 29 / 20 (0.20 / 0.16 / 0.12 / 0.08)	
	SOUND PRESSURE LEVEL (H/M/L)		dBA	41 / 40 / 39 / 36	
	UNIT DIMENSION	HEIGHT	mm/in	378 / 14.9	
		WIDTH	mm/in	929 / 36.6	
		DEPTH	mm/in	541 / 21.3	
	PACKING DIMENSION	HEIGHT	mm/in	415 / 16.3	
		WIDTH	mm/in	1126 / 44.3	
		DEPTH	mm/in	631 / 24.8	
	WEIGHT		kg/lb	39 / 86	
	CONDENSATE DRAIN SIZE		mm/in	19.1 / 3/4	
OUTDOOR UNIT	AIR FLOW		l/s / CFM	741 / 1570	1605 / 3400
	SOUND PRESSURE LEVEL		dBA	~~54~~ 58	58
	UNIT DIMENSION	HEIGHT	mm/in	756 / 29.6	852 ~~850 /~~ 33.46
		WIDTH	mm/in	855 / 33.7	1030 / 40.55
		DEPTH	mm/in	328 / 12.9	400 / 15.75
	PACKING DIMENSION	HEIGHT	mm/in	810 / 31.9	1010 / 39.8 ~~1000 / 39.37~~
		WIDTH	mm/in	990 / 39.0	1180 / 46.5 ~~1200 / 47.24~~
		DEPTH	mm/in	415 / 16.3	514 / 20.2 ~~560 / 22.05~~
	UNIT WEIGHT		kg/lb	68 / 150	95 / 209
	PIPE CONNECTION	TYPE		FLARE VALVE	
		SIZE LIQUID	mm/in	9.5 / 3/8	
		SIZE GAS	mm/in	15.9 / 5/8	
REFRIGERANT CHARGE			kg/lb	2.40 / 5.30	2.15 / 4.74

1) ALL SPECIFICATIONS ARE SUBJECTED TO CHANGE BY THE MANUFACTURER WITHOUT PRIOR NOTICE.
2) ALL UNITS ARE BEING TESTED AND COMPLY TO ISO 13253.
3) NOMINAL COOLING AND HEATING CAPACITY ARE BASED ON THE CONDITIONS BELOW :
a) COOLING - 27°C DB / 19°C WB INDOOR AND 35°C DB / 24°C WB OUTDOOR
b) HEATING - 20°C DB INDOOR AND 7°C DB / 6°C WB OUTDOOR
4) EER/COP CALCULATION IS BASED ON EFFECTIVE POWER INPUT AS PER ISO 13253.

General Data - Heat pump (R22) (Low Static)

MODEL				ACC 40CR	
INDOOR UNIT					
OUTDOOR UNIT				ALC ~~35CR~~ 35DR	ALC ~~40CR~~ 40DR
NOMINAL COOLING CAPACITY- 1Ø / <3Ø>			Btu/h	33500	~~40000 / <40000>~~ 37500 / <37500>
			W	9318	~~11723 / <11723>~~ 11000 / <11100>
NOMINAL HEATING CAPACITY- 1Ø / <3Ø>			Btu/h	35000	40000 / <40000>
			W	10257	~~11723 / <11723>~~ 11700 / <11700>
NOMINAL TOTAL INPUT POWER (COOLING) - 1Ø / <3Ø>			W	3210	~~3673 / <3643>~~ 3700 / <3650>
NOMINAL TOTAL INPUT POWER (HEATING) - 1Ø / <3Ø>			W	3210	~~3183 / <3153>~~ 3650 / <3550>
NOMINAL RUNNING CURRENT (COOLING) - 1Ø / <3Ø>			A	16.4	18.0 / <5.4>
NOMINAL RUNNING CURRENT (HEATING) - 1Ø / <3Ø>			A	16.4	16.6 / <4.0>
POWER SOURCE - 1Ø / <3Ø>			V/Ph/Hz	220 - 240 / 1 / 50 / <380 - 415 / 3 / 50>	
EER - 1Ø / <3Ø>			W/W	3.12	~~3.25 / <3.28>~~ 2.97 / <3.01>
COP - 1Ø / <3Ø>			W/W	3.26	~~3.53 / <3.57>~~ 3.21 / <3.30>
REFRIGERANT TYPE / CONTROL				R22	
REFRIGERANT CONTROL (EXPANSION DEVICE)				OUTDOOR CAP. TUBE + TXV	
INDOOR UNIT	CONTROL	AIR DISCHARGE		DUCTED	
		OPERATION		SLM WIRED HANDSET	
	AIR FLOW	SUPER HIGH	l/s / CFM	562 / 1190	
		HIGH	l/s / CFM	500 / 1060	
		MEDIUM	l/s / CFM	472 / 1000	
		LOW	l/s / CFM	458 / 970	
	EXTERNAL STATIC PRESSURE (H/M/L)		Pa (in.wg.)	49 / 39 / 29 / 20 (0.20 / 0.16 / 0.12 / 0.08)	
	SOUND PRESSURE LEVEL (H/M/L)		dBA	43 / 41 / 40 / 38	
	UNIT DIMENSION	HEIGHT	mm/in	378 / 14.9	
		WIDTH	mm/in	1045 / 41.1	
		DEPTH	mm/in	541 / 21.3	
	PACKING DIMENSION	HEIGHT	mm/in	415 / 16.3	
		WIDTH	mm/in	1245 / 49.0	
		DEPTH	mm/in	631 / 24.8	
	WEIGHT		kg/lb	42 / 93	
	CONDENSATE DRAIN SIZE		mm/in	19.1 / 3/4	
OUTDOOR UNIT	AIR FLOW		l/s / CFM	1605 / 3400	1605 / 3400
	SOUND PRESSURE LEVEL		dBA	58	58
	UNIT DIMENSION	HEIGHT	mm/in	852 ~~850~~ / 33.5	
		WIDTH	mm/in	1030 / 40.6	
		DEPTH	mm/in	400 / 15.8	
	PACKING DIMENSION	HEIGHT	mm/in	1010 / 39.8 ~~1000 / 39.4~~	
		WIDTH	mm/in	1180 / 46.5 ~~1200 / 47.2~~	
		DEPTH	mm/in	514 / 20.2 ~~500 / 22.1~~	
	UNIT WEIGHT		kg/lb	95 / 209	100 / 221
	PIPE CONNECTION	TYPE		FLARE VALVE	
		SIZE LIQUID	mm/in	9.5 / 3/8	
		SIZE GAS	mm/in	19.1 / 3/4	
REFRIGERANT CHARGE			kg/lb	2.60 / 5.73	2.60 / 5.73

1) ALL SPECIFICATIONS ARE SUBJECTED TO CHANGE BY THE MANUFACTURER WITHOUT PRIOR NOTICE.
2) ALL UNITS ARE BEING TESTED AND COMPLY TO ISO 13253.
3) NOMINAL COOLING AND HEATING CAPACITY ARE BASED ON THE CONDITIONS BELOW :
a) COOLING - 27°C DB / 19°C WB INDOOR AND 35°C DB / 24°C WB OUTDOOR
b) HEATING - 20°C DB INDOOR AND 7°C DB / 6°C WB OUTDOOR
4) EER/COP CALCULATION IS BASED ON EFFECTIVE POWER INPUT AS PER ISO 13253.

General Data - Heat pump (R22) (Low Static)

MODEL					ACC 50CR	ACC 60CR
INDOOR UNIT						
OUTDOOR UNIT					ALC ~~50CR~~ 50DR	ALC ~~61CR~~ 61DR
NOMINAL COOLING CAPACITY				Btu/h	50000	56000
				W	14654	16410
NOMINAL HEATING CAPACITY				Btu/h	53000	56000
				W	15533	16410
NOMINAL TOTAL INPUT POWER (COOLING)				W	4956	5884
NOMINAL TOTAL INPUT POWER (HEATING)				W	4956	4854
NOMINAL RUNNING CURRENT (COOLING)				A	9.0	10.0
NOMINAL RUNNING CURRENT (HEATING)				A	6.0	8.8
POWER SOURCE				V/Ph/Hz	380 - 415 / 3 / 50	380 - 415 / 3 / 50
EER				W/W	3.03	2.85
COP				W/W	3.67	3.46
REFRIGERANT TYPE					R22	R22
REFRIGERANT CONTROL (EXPANSION DEVICE)					OUTDOOR CAP. TUBE + TXV	INDOOR & OUTDOOR CAP. TUBE
INDOOR UNIT	CONTROL	AIR DISCHARGE			DUCTED	
		OPERATION			SLM WIRED HANDSET	
	AIR FLOW	SUPER HIGH		l/s / CFM	713 / 1510	802 / 1700
		HIGH		l/s / CFM	628 / 1330	765 / 1620
		MEDIUM		l/s / CFM	618 / 1310	717 / 1520
		LOW		l/s / CFM	599 / 1270	693 / 1470
	EXTERNAL STATIC PRESSURE (H/M/L)			Pa (in.wg.)	78 / 59 / 39 / 20 (0.31 / 0.24 / 0.16 / 0.08)	69 / 49 / 29 / 20 (0.28 / 0.20 / 0.12 / 0.08)
	SOUND PRESSURE LEVEL (H/M/L)			dBA	46 / 44 / 43 / 42	48 / 47 / 46 / 45
	UNIT DIMENSION	HEIGHT		mm/in	378 / 14.9	378 / 14.9
		WIDTH		mm/in	1299 / 51.1	1499 / 59.0
		DEPTH		mm/in	541 / 21.3	541 / 21.3
	PACKING DIMENSION	HEIGHT		mm/in	415 / 16.3	415 / 16.3
		WIDTH		mm/in	1497 / 59.0	1701 / 67.0
		DEPTH		mm/in	631 / 24.8	631 / 24.8
	WEIGHT			kg/lb	54 / 119	62 / 137
	CONDENSATE DRAIN SIZE			mm/in	19.1 / 3/4	
OUTDOOR UNIT	AIR FLOW			l/s / CFM	1605 / 3400	1793 / 3800
	SOUND PRESSURE LEVEL			dBA	58	61
	UNIT DIMENSION	HEIGHT		mm/in	852 ~~850~~ / 33.5	852 ~~850~~ / 33.5
		WIDTH		mm/in	1030 / 40.6	1030 / 40.6
		DEPTH		mm/in	400 / 15.8	460 / 18.1
	PACKING DIMENSION	HEIGHT		mm/in	1010 / 39.8 ~~1000 / 39.4~~	1010 / 39.8 ~~1016 / 40.0~~
		WIDTH		mm/in	1180 / 46.5 ~~1200 / 47.2~~	1180 / 46.5 ~~1178 / 46.4~~
		DEPTH		mm/in	514 / 20.2 ~~560 / 22.1~~	514 / 20.2 ~~602 / 23.7~~
	UNIT WEIGHT			kg/lb	105 / 231	108 / 238
	PIPE CONNECTION	TYPE			FLARE VALVE	
		SIZE	LIQUID	mm/in	9.5 / 3/8	12.7 / 1/2
			GAS	mm/in	19.1 / 3/4	19.1 / 3/4
REFRIGERANT CHARGE				kg/lb	2.75 / 5.73	5.00 / 11.02

1) ALL SPECIFICATIONS ARE SUBJECTED TO CHANGE BY THE MANUFACTURER WITHOUT PRIOR NOTICE.
2) ALL UNITS ARE BEING TESTED AND COMPLY TO ISO 13253.
3) NOMINAL COOLING AND HEATING CAPACITY ARE BASED ON THE CONDITIONS BELOW :
a) COOLING - 27°C DB / 19°C WB INDOOR AND 35°C DB / 24°C WB OUTDOOR
b) HEATING - 20°C DB INDOOR AND 7°C DB / 6°C WB OUTDOOR
4) EER/COP CALCULATION IS BASED ON EFFECTIVE POWER INPUT AS PER ISO 13253.

Components Data (R22)

MODEL	INDOOR UNIT			ACC 10C	ACC 15C
	OUTDOOR UNIT			ALC 10C	ALC 15C
INDOOR FAN	TYPE			CENTRIFUGAL	
	QUANTITY			1	2
	MATERIAL			GALVANIZED STEEL	
	DRIVE			DIRECT	
	DIAMETER		mm/in	160 / 6.30	
	LENGTH		mm/in	202 / 7.95	
INDOOR FAN MOTOR	TYPE			INDUCTION	
	QUANTITY			1	
	INDEX OF PROTECTION (IP)			N/A	
OUTDOOR FAN	TYPE			PROPELLER	
	QUANTITY			1	
	MATERIAL			GLASS REINFORCED ACRYL STYRENE RESIN	
	DRIVE			DIRECT	
	DIAMETER		mm/in	404 / 16	
OUTDOOR FAN MOTOR	TYPE			INDUCTION	
	QUANTITY			1	
	INDEX OF PROTECTION (IP)			IP23	
COMPRESSOR	TYPE			ROTARY	
	OIL TYPE			ATMOS NM56M or SUNISO 4GDID	
	OIL AMOUNT		cm^3 / fl.oz.	320 / 11.3	350 / 11.8
INDOOR COIL	TUBE	MATERIAL		SEAMLESS COPPER	
		DIAMETER	mm/in	9.52 / 3/8	
		THICKNESS	mm/in	0.35 / 0.014	
	FIN	MATERIAL		ALUMINIUM (CORR. FIN)	ALUMINIUM (CORR. FIN)
		THICKNESS	mm/in	0.11 / 0.0043	0.11 / 0.0043
		FACE AREA	m^2/ft^2	0.115 / 1.238	0.143 / 1.542
		ROW		3	3
		FIN PER INCH		12	14
OUTDOOR COIL	TUBE	MATERIAL		SEAMLESS INNER GROOVE COPPER	
		DIAMETER	mm/in	7.00 / 0.276	
		THICKNESS	mm/in	0.28 / 0.011	
	FIN	MATERIAL		RAISE LANCE	ALUMINIUM SLIT FIN
		THICKNESS	mm/in	0.10 / 0.004	
		FACE AREA	m^2/ft^2	0.36 / 3.88	
		ROW		1	
		FIN PER INCH		20	
AIR QUALITY	FILTER	TYPE		WASHABLE SARANET FILTER	
		QUANTITY	pc	1	
		SIZE LENGTH	mm/in	560 / 22.05	700 / 27.56
		SIZE WIDTH	mm/in	195 / 7.68	195 / 7.68
		SIZE THICKNESS	mm/in	5 / 0.20	5 / 0.20
CASING	INDOOR UNIT		MATERIAL	GALVANIZED STEEL	
			FINISHING	WITH PE INSULATION	
			COLOUR	WITHOUT POWDER PAINT	
	OUTDOOR UNIT		MATERIAL	GALVANIZED MILD STEEL	
			FINISHING	POLYESTER POWDER	
			COLOUR	LIGHT GREY	

1) ALL SPECIFICATIONS ARE SUBJECTED TO CHANGE BY THE MANUFACTURER WITHOUT PRIOR NOTICE.

Components Data (R22)

MODEL	**INDOOR UNIT**			**ACC 20C**		
	OUTDOOR UNIT			**ALC 18C**	**ALC 20C**	
INDOOR FAN	**TYPE**			CENTRIFUGAL		
	QUANTITY			2		
	MATERIAL			GALVANIZED STEEL		
	DRIVE			DIRECT		
	DIAMETER		**mm/in**	160 / 6.30		
	LENGTH		**mm/in**	202 / 7.95		
INDOOR FAN MOTOR	**TYPE**			INDUCTION		
	QUANTITY			1		
	INDEX OF PROTECTION (IP)			N/A		
OUTDOOR FAN	**TYPE**			PROPELLER		
	QUANTITY			1		
	MATERIAL			GLASS REINFORCED ACRYL STYRENE RESIN		
	DRIVE			DIRECT		
	DIAMETER		**mm/in**	457 / 18		
OUTDOOR FAN MOTOR	**TYPE**			INDUCTION		
	QUANTITY			1		
	INDEX OF PROTECTION (IP)			~~IP24~~ IP 44		
COMPRESSOR	**TYPE**			ROTARY		
	OIL TYPE			ATMOS NM56M or SUNISO 4GDID		
	OIL AMOUNT		**cm^3 / fl.oz.**	670 / 23.6		
INDOOR COIL	**TUBE**	**MATERIAL**		SEAMLESS COPPER		
		DIAMETER	**mm/in**	9.52 / 3/8		
		THICKNESS	**mm/in**	0.35 / 0.014		
	FIN	**MATERIAL**		ALUMINIUM (CORR. FIN)		
		THICKNESS	**mm/in**	0.11 / 0.0043		
		FACE AREA	**m^2/ft^2**	0.176 / 1.892		
		ROW		3		
		FIN PER INCH		12		
OUTDOOR COIL	**TUBE**	**MATERIAL**		SEAMLESS INNER GROOVE COPPER		
		DIAMETER	**mm/in**	7.00 / 0.276		
		THICKNESS	**mm/in**	0.28 / 0.011		
	FIN	**MATERIAL**		RAISE LANCE	ALUMINIUM SLIT FIN	
		THICKNESS	**mm/in**	0.10 / 0.004		
		FACE AREA	**m^2/ft^2**	0.52 / 5.59		
		ROW		1	2	
		FIN PER INCH		20	24	
AIR QUALITY	**FILTER**	**TYPE**		WASHABLE SARANET FILTER		
		QUANTITY	**pc**	1		
		SIZE **LENGTH**	**mm/in**	860 / 33.86		
		SIZE **WIDTH**	**mm/in**	195 / 7.68		
		SIZE **THICKNESS**	**mm/in**	5 / 0.20		
CASING	**INDOOR UNIT**		**MATERIAL**	GALVANIZED STEEL		
			FINISHING	WITH PE INSULATION		
			COLOUR	WITHOUT POWDER PAINT		
	OUTDOOR UNIT		**MATERIAL**	GALVANIZED MILD STEEL		
			FINISHING	POLYESTER POWDER		
			COLOUR	LIGHT GREY		

1) ALL SPECIFICATIONS ARE SUBJECTED TO CHANGE BY THE MANUFACTURER WITHOUT PRIOR NOTICE.

Components Data (R22)

MODEL	**INDOOR UNIT**				**ACC 25C**
	OUTDOOR UNIT				**ALC 25C**
INDOOR FAN	**TYPE**				CENTRIFUGAL
	QUANTITY				2
	MATERIAL				GALVANIZED STEEL
	DRIVE				DIRECT
	DIAMETER			**mm/in**	160 / 6.30
	LENGTH			**mm/in**	202 / 7.95
INDOOR FAN MOTOR	**TYPE**				INDUCTION
	QUANTITY				1
	INDEX OF PROTECTION (IP)				N/A
OUTDOOR FAN	**TYPE**				PROPELLER
	QUANTITY				1
	MATERIAL				GLASS REINFORCED ACRYL STYRENE RESIN
	DRIVE				DIRECT
	DIAMETER			**mm/in**	457 / 18
OUTDOOR FAN MOTOR	**TYPE**				INDUCTION
	QUANTITY				1
	INDEX OF PROTECTION (IP)				~~IP24~~ IP 23
COMPRESSOR	**TYPE**				ROTARY
	OIL TYPE				ATMOS NM56M or SUNISO 4GDID
	OIL AMOUNT			**cm^3 / fl.oz.**	700 / 24.6
INDOOR COIL	**TUBE**	**MATERIAL**			SEAMLESS INNER GROOVE COPPER
		DIAMETER		**mm/in**	9.52 / 3/8
		THICKNESS		**mm/in**	0.33 / 0.013
	FIN	**MATERIAL**			ALUMINIUM (CORR. FIN)
		THICKNESS		**mm/in**	0.11 / 0.0043
		FACE AREA		**m^2/ft^2**	0.203 / 2.187
		ROW			3
		FIN PER INCH			12
OUTDOOR COIL	**TUBE**	**MATERIAL**			SEAMLESS INNER GROOVE COPPER
		DIAMETER		**mm/in**	7.00 / 0.276
		THICKNESS		**mm/in**	0.28 / 0.011
	FIN	**MATERIAL**			ALUMINIUM (CORRUGATED)
		THICKNESS		**mm/in**	0.10 / 0.004
		FACE AREA		**m^2/ft^2**	0.62 / 6.67
		ROW			2
		FIN PER INCH			18
AIR QUALITY	**FILTER**	**TYPE**			WASHABLE SARANET FILTER
		QUANTITY		**pc**	1
		SIZE	**LENGTH**	**mm/in**	995 / 39.17
			WIDTH	**mm/in**	195 / 7.68
			THICKNESS	**mm/in**	5 / 0.20
CASING	**INDOOR UNIT**			**MATERIAL**	GALVANIZED STEEL
				FINISHING	WITH PE INSULATION
				COLOUR	WITHOUT POWDER PAINT
	OUTDOOR UNIT			**MATERIAL**	GALVANIZED MILD STEEL
				FINISHING	POLYESTER POWDER
				COLOUR	LIGHT GREY

1) ALL SPECIFICATIONS ARE SUBJECTED TO CHANGE BY THE MANUFACTURER WITHOUT PRIOR NOTICE.

Components Data (R22)

MODEL	INDOOR UNIT			ACC 28C		
	OUTDOOR UNIT			ALC 28C	ALC ~~30C~~ 30D	
INDOOR FAN	TYPE			CENTRIFUGAL		
	QUANTITY			2		
	MATERIAL			GALVANIZED STEEL		
	DRIVE			DIRECT		
	DIAMETER		mm/in	185 / 7.28		
	LENGTH		mm/in	203 / 7.99		
INDOOR FAN MOTOR	TYPE			INDUCTION		
	QUANTITY			1		
	INDEX OF PROTECTION (IP)			N/A		
OUTDOOR FAN	TYPE			PROPELLER		
	QUANTITY			1		
	MATERIAL			GLASS REINFORCED ACRYL STYRENE RESIN		
	DRIVE			DIRECT		
	DIAMETER		mm/in	457 / 18	609.6 / 24	
OUTDOOR FAN MOTOR	TYPE			INDUCTION		
	QUANTITY			1		
	INDEX OF PROTECTION (IP)			~~IP24~~ IP 23	- IP 54	
COMPRESSOR	TYPE			ROTARY	SCROLL	
	OIL TYPE			ATMOS M60 or SUNISO 4GDID	MINERAL (Sontex 200 LT)	
	OIL AMOUNT		cm^3 / fl.oz.	1130 / 39.8	1240 / 43.6	
INDOOR COIL	TUBE	MATERIAL		SEAMLESS COPPER		
		DIAMETER	mm/in	9.52 / 3/8		
		THICKNESS	mm/in	0.36 / 0.014		
	FIN	MATERIAL		ALUMINIUM (CORR. FIN)		
		THICKNESS	mm/in	0.127 / 0.005		
		FACE AREA	m^2/ft^2	0.24 / 2.62		
		ROW		3		
		FIN PER INCH		14		
OUTDOOR COIL	TUBE	MATERIAL		SEAMLESS INNER GROOVE COPPER	SEAMLESS COPPER	
		DIAMETER	mm/in	9.52 / 3/8	9.52 / 3/8	
		THICKNESS	mm/in	0.33 / 0.013	0.35 / 0.014	
	FIN	MATERIAL		ALUMINIUM (SLIT FIN)	ALUMINIUM (SLIT FIN)	
		THICKNESS	mm/in	0.12 / 0.005	0.12 / 0.005	
		FACE AREA	m^2/ft^2	0.61 / 6.52	0.87 / 9.33	
		ROW		2	1	
		FIN PER INCH		18	16	
AIR QUALITY	FILTER	TYPE		WASHABLE SARANET FILTER		
		QUANTITY	pc	2		
		SIZE LENGTH	mm/in	456 / 17.95		
		SIZE WIDTH	mm/in	210 / 8.27		
		SIZE THICKNESS	mm/in	5 / 0.20		
CASING	INDOOR UNIT		MATERIAL	GALVANIZED STEEL		
			FINISHING	WITH PE INSULATION		
			COLOUR	WITHOUT POWDER PAINT		
	OUTDOOR UNIT		MATERIAL	GALVANIZED MILD STEEL		
			FINISHING	POLYESTER POWDER		
			COLOUR	LIGHT GREY		

1) ALL SPECIFICATIONS ARE SUBJECTED TO CHANGE BY THE MANUFACTURER WITHOUT PRIOR NOTICE.

Components Data (R22)

MODEL	INDOOR UNIT			ACC 38C	
	OUTDOOR UNIT			ALC ~~35C~~ 35D	ALC ~~40C~~ 40D
INDOOR FAN	TYPE			CENTRIFUGAL	
	QUANTITY			2	
	MATERIAL			GALVANIZED STEEL	
	DRIVE			DIRECT	
	DIAMETER		mm/in	214 / 8.43	
	LENGTH		mm/in	203.2 / 8.00	
INDOOR FAN MOTOR	TYPE			INDUCTION	
	QUANTITY			1	
	INDEX OF PROTECTION (IP)			N/A	
OUTDOOR FAN	TYPE			PROPELLER	
	QUANTITY			1	
	MATERIAL			GLASS REINFORCED ACRYL STYRENE RESIN	
	DRIVE			DIRECT	
	DIAMETER		mm/in	609.6 / 24	
OUTDOOR FAN MOTOR	TYPE			INDUCTION	
	QUANTITY			1	
	INDEX OF PROTECTION (IP)			~~IP44~~ IP 54	
COMPRESSOR	TYPE			SCROLL	
	OIL TYPE			MINERAL (Sontex 200 LT)	MINERAL (Sontex 200 LT)
	OIL AMOUNT		cm^3 / fl.oz.	1240 / 43.6	1240 / 43.6
INDOOR COIL	TUBE	MATERIAL		SEAMLESS COPPER	
		DIAMETER	mm/in	9.52 / 3/8	
		THICKNESS	mm/in	0.36 / 0.014	
	FIN	MATERIAL		ALUMINIUM (CORR. FIN)	
		THICKNESS	mm/in	0.127 / 0.005	
		FACE AREA	m^2/ft^2	0.34 / 3.61	
		ROW		3	
		FIN PER INCH		14	
OUTDOOR COIL	TUBE	MATERIAL		SEAMLESS COPPER	
		DIAMETER	mm/in	9.52 / 3/8	
		THICKNESS	mm/in	0.35 / 0.014	
	FIN	MATERIAL		ALUMINIUM (SLIT FIN)	ALUMINIUM (CORR. FIN)
		THICKNESS	mm/in	0.127 / 0.005	0.127 / 0.005
		FACE AREA	m^2/ft^2	0.87 / 9.33	0.87 / 9.33
		ROW		1	2
		FIN PER INCH		16	14
AIR QUALITY	FILTER	TYPE		WASHABLE SARANET FILTER	
		QUANTITY	pc	2	
		SIZE LENGTH	mm/in	608 / 23.94	
		SIZE WIDTH	mm/in	230 / 9.06	
		SIZE THICKNESS	mm/in	5 / 0.20	
CASING	INDOOR UNIT		MATERIAL	GALVANIZED STEEL	
			FINISHING	WITH PE INSULATION	
			COLOUR	WITHOUT POWDER PAINT	
	OUTDOOR UNIT		MATERIAL	GALVANIZED MILD STEEL	
			FINISHING	POLYESTER POWDER	
			COLOUR	LIGHT GREY	

1) ALL SPECIFICATIONS ARE SUBJECTED TO CHANGE BY THE MANUFACTURER WITHOUT PRIOR NOTICE.

Components Data (R22)

MODEL	INDOOR UNIT			ACC 30C	
	OUTDOOR UNIT			ALC 28C	ALC ~~30C~~ 30D
INDOOR FAN	TYPE			CENTRIFUGAL	
	QUANTITY			2	
	MATERIAL			GALVANIZED STEEL	
	DRIVE			DIRECT	
	DIAMETER		mm/in	214 / 8.43	
	LENGTH		mm/in	203.2 / 8.00	
INDOOR FAN MOTOR	TYPE			INDUCTION	
	QUANTITY			1	
	INDEX OF PROTECTION (IP)			N/A	
OUTDOOR FAN	TYPE			PROPELLER	
	QUANTITY			1	
	MATERIAL			GLASS REINFORCED ACRYL STYRENE RESIN	
	DRIVE			DIRECT	
	DIAMETER		mm/in	457 / 18	609.6 / 24
OUTDOOR FAN MOTOR	TYPE			INDUCTION	
	QUANTITY			1	
	INDEX OF PROTECTION (IP)			~~IP24~~ IP 23	- IP 54
COMPRESSOR	TYPE			ROTARY	SCROLL
	OIL TYPE			ATMOS M60 or SUNISO 4GDID	MINERAL (Sontex 200 LT)
	OIL AMOUNT		cm^3 / fl.oz.	1130 / 39.8	1240 / 43.6
INDOOR COIL	TUBE	MATERIAL		SEAMLESS COPPER	
		DIAMETER	mm/in	9.52 / 3/8	
		THICKNESS	mm/in	0.36 / 0.014	
	FIN	MATERIAL		ALUMINIUM (CORR. FIN)	
		THICKNESS	mm/in	0.127 / 0.005	
		FACE AREA	m^2/ft^2	0.277 / 2.98	
		ROW		3	
		FIN PER INCH		12	
OUTDOOR COIL	TUBE	MATERIAL		SEAMLESS INNER GROOVE COPPER	SEAMLESS COPPER
		DIAMETER	mm/in	9.52 / 3/8	9.52 / 3/8
		THICKNESS	mm/in	0.33 / 0.013	0.35 / 0.014
	FIN	MATERIAL		ALUMINIUM (SLIT FIN)	ALUMINIUM (SLIT FIN)
		THICKNESS	mm/in	0.127 / 0.005	0.127 / 0.005
		FACE AREA	m^2/ft^2	0.61 / 6.52	0.87 / 9.33
		ROW		2	1
		FIN PER INCH		18	16
AIR QUALITY	FILTER	TYPE		WASHABLE SARANET FILTER	
		QUANTITY	pc	2	
		SIZE LENGTH	mm/in	449 / 17.68	
		SIZE WIDTH	mm/in	305 / 12.01	
		SIZE THICKNESS	mm/in	5 / 0.20	
CASING	INDOOR UNIT		MATERIAL	GALVANIZED STEEL	
			FINISHING	WITH PE INSULATION	
			COLOUR	WITHOUT POWER PAINT	
	OUTDOOR UNIT		MATERIAL	GALVANIZED MILD STEEL	
			FINISHING	POLYESTER POWDER	
			COLOUR	LIGHT GREY	

1) ALL SPECIFICATIONS ARE SUBJECTED TO CHANGE BY THE MANUFACTURER WITHOUT PRIOR NOTICE.

Components Data (R22)

MODEL	INDOOR UNIT			ACC 40C	
	OUTDOOR UNIT			ALC ~~35C~~ 35D	ALC ~~40C~~ 40D
INDOOR FAN	TYPE			CENTRIFUGAL	
	QUANTITY			2	
	MATERIAL			GALVANIZED STEEL	
	DRIVE			DIRECT	
	DIAMETER		mm/in	214 / 8.43	
	LENGTH		mm/in	203.2 / 8.00	
INDOOR FAN MOTOR	TYPE			INDUCTION	
	QUANTITY			1	
	INDEX OF PROTECTION (IP)			N/A	
OUTDOOR FAN	TYPE			PROPELLER	
	QUANTITY			1	
	MATERIAL			GLASS REINFORCED ACRYL STYRENE RESIN	
	DRIVE			DIRECT	
	DIAMETER		mm/in	609.6 / 24	
OUTDOOR FAN MOTOR	TYPE			INDUCTION	
	QUANTITY			1	
	INDEX OF PROTECTION (IP)			~~IP44~~ IP 54	
COMPRESSOR	TYPE			SCROLL	
	OIL TYPE			MINERAL (Sontex 200 LT)	MINERAL (Sontex 200 LT)
	OIL AMOUNT		cm^3 / fl.oz.	1240 / 43.6	1240 / 43.6
INDOOR COIL	TUBE	MATERIAL		SEAMLESS COPPER	
		DIAMETER	mm/in	9.52 / 3/8	
		THICKNESS	mm/in	0.36 / 0.014	
	FIN	MATERIAL		ALUMINIUM (CORR. FIN)	
		THICKNESS	mm/in	0.127 / 0.005	
		FACE AREA	m^2/ft^2	0.31 / 3.44	
		ROW		3	
		FIN PER INCH		14	
OUTDOOR COIL	TUBE	MATERIAL		SEAMLESS COPPER	
		DIAMETER	mm/in	9.52 / 3/8	
		THICKNESS	mm/in	0.35 / 0.014	
	FIN	MATERIAL		ALUMINIUM (SLIT FIN)	ALUMINIUM (CORR. FIN)
		THICKNESS	mm/in	0.127 / 0.005	0.127 / 0.005
		FACE AREA	m^2/ft^2	0.87 / 9.33	0.87 / 9.33
		ROW		1	2
		FIN PER INCH		16	14
AIR QUALITY	FILTER	TYPE		WASHABLE SARANET FILTER	
		QUANTITY	pc	2	
		SIZE LENGTH	mm/in	507 / 19.96	
		SIZE WIDTH	mm/in	305 / 12.01	
		SIZE THICKNESS	mm/in	5 / 0.20	
CASING	INDOOR UNIT		MATERIAL	GALVANIZED STEEL	
			FINISHING	WITH PE INSULATION	
			COLOUR	WITHOUT POWDER PAINT	
	OUTDOOR UNIT		MATERIAL	GALVANIZED MILD STEEL	
			FINISHING	POLYESTER POWDER	
			COLOUR	LIGHT GREY	

1) ALL SPECIFICATIONS ARE SUBJECTED TO CHANGE BY THE MANUFACTURER WITHOUT PRIOR NOTICE.

Components Data (R22)

MODEL	INDOOR UNIT			ACC 50C	ACC 60C
	OUTDOOR UNIT			ALC ~~50C~~ 50D	ACC ~~61C~~ 61D
INDOOR FAN	TYPE			CENTRIFUGAL	
	QUANTITY			2	
	MATERIAL			GALVANIZED STEEL	
	DRIVE			DIRECT	
	DIAMETER		mm/in	214 / 8.43	
	LENGTH		mm/in	203.2 / 8.00	
INDOOR FAN MOTOR	TYPE			INDUCTION	
	QUANTITY			1	
	INDEX OF PROTECTION (IP)			N/A	
OUTDOOR FAN	TYPE			PROPELLER	
	QUANTITY			1	
	MATERIAL			GLASS REINFORCED ACRYL STYRENE RESIN	
	DRIVE			DIRECT	
	DIAMETER		mm/in	609.6 / 24	
OUTDOOR FAN MOTOR	TYPE			INDUCTION	
	QUANTITY			1	
	INDEX OF PROTECTION (IP)			~~IP44~~ IP 54	- N/A
COMPRESSOR	TYPE			SCROLL	
	OIL TYPE			MINERAL (Sontex 200 LT)	MINERAL (Sontex 200 LT)
	OIL AMOUNT		cm^3 / fl.oz.	1950 / 68.6	1705 / 60.0
INDOOR COIL	TUBE	MATERIAL		SEAMLESS COPPER	
		DIAMETER	mm/in	9.52 / 3/8	
		THICKNESS	mm/in	0.35 / 0.014	
	FIN	MATERIAL		ALUMINIUM (CORR. FIN)	ALUMINIUM (CORR. FIN)
		THICKNESS	mm/in	0.127 / 0.005	0.127 / 0.005
		FACE AREA	m^2/ft^2	0.40 / 4.40	0.47 / 5.16
		ROW		3	3
		FIN PER INCH		14	14
OUTDOOR COIL	TUBE	MATERIAL		SEAMLESS COPPER	SEAMLESS INNER GROOVED COPPER
		DIAMETER	mm/in	9.52 / 3/8	9.52 / 3/8
		THICKNESS	mm/in	0.35 / 0.014	0.33 / 0.013
	FIN	MATERIAL		ALUMINIUM (CORR. FIN)	ALUMINIUM (SLIT FIN)
		THICKNESS	mm/in	0.127 / 0.005	0.127 / 0.005
		FACE AREA	m^2/ft^2	0.87 / 9.33	0.84 / 9.04
		ROW		2	3
		FIN PER INCH		16	14
AIR QUALITY	FILTER	TYPE		WASHABLE SARANET FILTER	
		QUANTITY	pc	2	
		SIZE LENGTH	mm/in	634 / 24.96	734 / 28.90
		SIZE WIDTH	mm/in	305 / 12.01	305 / 12.01
		SIZE THICKNESS	mm/in	5 / 0.20	5 / 0.20
CASING	INDOOR UNIT		MATERIAL	GALVANIZED STEEL	
			FINISHING	WITH PE INSULATION	
			COLOUR	WITHOUT POWDER PAINT	
	OUTDOOR UNIT		MATERIAL	GALVANIZED MILD STEEL	
			FINISHING	POLYESTER POWDER	
			COLOUR	LIGHT GREY	

1) ALL SPECIFICATIONS ARE SUBJECTED TO CHANGE BY THE MANUFACTURER WITHOUT PRIOR NOTICE.

Components Data (R22)

MODEL	INDOOR UNIT			ACC 10CR	ACC 15CR
	OUTDOOR UNIT			ALC 10CR	ALC 15CR
INDOOR FAN	TYPE			CENTRIFUGAL	
	QUANTITY			1	2
	MATERIAL			GALVANIZED STEEL	
	DRIVE			DIRECT	
	DIAMETER		mm/in	160 / 6.30	
	LENGTH		mm/in	202 / 7.95	
INDOOR FAN MOTOR	TYPE			INDUCTION	
	QUANTITY			1	
	INDEX OF PROTECTION (IP)			N/A	
OUTDOOR FAN	TYPE			PROPELLER	
	QUANTITY			1	
	MATERIAL			GLASS REINFORCED ACRYL STYRENE RESIN	
	DRIVE			DIRECT	
	DIAMETER		mm/in	404 / 16	
OUTDOOR FAN MOTOR	TYPE			INDUCTION	
	QUANTITY			1	
	INDEX OF PROTECTION (IP)			IP23	
COMPRESSOR	TYPE			ROTARY	
	OIL TYPE			ATMOS NM56M or SUNISO 4GDID	
	OIL AMOUNT		cm^3 / fl.oz.	320 / 11.3	350 / 11.8
INDOOR COIL	TUBE	MATERIAL		SEAMLESS COPPER	
		DIAMETER	mm/in	9.52 / 3/8	
		THICKNESS	mm/in	0.35 / 0.014	
	FIN	MATERIAL		ALUMINIUM (CORR. FIN)	ALUMINIUM (CORR. FIN)
		THICKNESS	mm/in	0.11 / 0.0043	0.11 / 0.0043
		FACE AREA	m^2/ft^2	0.115 / 1.238	0.143 / 1.542
		ROW		3	3
		FIN PER INCH		12	14
OUTDOOR COIL	TUBE	MATERIAL		SEAMLESS INNER GROOVE COPPER	
		DIAMETER	mm/in	7.00 / 0.276	
		THICKNESS	mm/in	0.28 / 0.011	
	FIN	MATERIAL		RAISE LANCE	ALUMINIUM SLIT FIN
		THICKNESS	mm/in	0.10 / 0.004	
		FACE AREA	m^2/ft^2	0.36 / 3.88	
		ROW		1	
		FIN PER INCH		20	
AIR QUALITY	FILTER	TYPE		WASHABLE SARANET FILTER	
		QUANTITY	pc	1	
		SIZE LENGTH	mm/in	560 / 22.05	
		SIZE WIDTH	mm/in	195 / 7.68	
		SIZE THICKNESS	mm/in	5 / 0.20	
CASING	INDOOR UNIT		MATERIAL	GALVANIZED STEEL	
			FINISHING	WITH PE INSULATION	
			COLOUR	WITHOUT POWDER PAINT	
	OUTDOOR UNIT		MATERIAL	GALVANIZED MILD STEEL	
			FINISHING	POLYESTER POWDER	
			COLOUR	LIGHT GREY	

1) ALL SPECIFICATIONS ARE SUBJECTED TO CHANGE BY THE MANUFACTURER WITHOUT PRIOR NOTICE.

Components Data (R22)

MODEL	INDOOR UNIT			ACC 20CR		
	OUTDOOR UNIT			~~ALC 18CR~~	ALC 20CR	
INDOOR FAN	TYPE			CENTRIFUGAL		
	QUANTITY			2		
	MATERIAL			GALVANIZED STEEL		
	DRIVE			DIRECT		
	DIAMETER		mm/in	160 / 6.30		
	LENGTH		mm/in	202 / 7.95		
INDOOR FAN MOTOR	TYPE			INDUCTION		
	QUANTITY			1		
	INDEX OF PROTECTION (IP)			N/A		
OUTDOOR FAN	TYPE			PROPELLER		
	QUANTITY			1		
	MATERIAL			GLASS REINFORCED ACRYL STYRENE RESIN		
	DRIVE			DIRECT		
	DIAMETER		mm/in	457 / 18		
OUTDOOR FAN MOTOR	TYPE			INDUCTION		
	QUANTITY			1		
	INDEX OF PROTECTION (IP)			~~IP44~~ IP 44		
COMPRESSOR	TYPE			ROTARY		
	OIL TYPE			ATMOS NM56M or SUNISO 4GDID		
	OIL AMOUNT		cm^3 / fl.oz.	670 / 23.6		
INDOOR COIL	TUBE	MATERIAL		SEAMLESS COPPER		
		DIAMETER	mm/in	9.52 / 3/8		
		THICKNESS	mm/in	0.35 / 0.014		
	FIN	MATERIAL		ALUMINIUM (CORR. FIN)		
		THICKNESS	mm/in	0.11 / 0.0043		
		FACE AREA	m^2/ft^2	0.176 / 1.892		
		ROW		3		
		FIN PER INCH		12		
OUTDOOR COIL	TUBE	MATERIAL		SEAMLESS INNER GROOVE COPPER		
		DIAMETER	mm/in	7.00 / 0.276		
		THICKNESS	mm/in	0.28 / 0.011		
	FIN	MATERIAL		~~RAISE LANCE~~	ALUMINIUM SLIT FIN	
		THICKNESS	mm/in	0.10 / 0.004		
		FACE AREA	m^2/ft^2	0.52 / 5.59		
		ROW		~~1~~	2	
		FIN PER INCH		~~20~~	24	
AIR QUALITY	FILTER	TYPE		WASHABLE SARANET FILTER		
		QUANTITY	pc	1		
		SIZE LENGTH	mm/in	860 / 33.86		
		SIZE WIDTH	mm/in	195 / 7.68		
		SIZE THICKNESS	mm/in	5 / 0.20		
CASING	INDOOR UNIT		MATERIAL	GALVANIZED STEEL		
			FINISHING	WITH PE INSULATION		
			COLOUR	WITHOUT POWDER PAINT		
	OUTDOOR UNIT		MATERIAL	GALVANIZED MILD STEEL		
			FINISHING	POLYESTER POWDER		
			COLOUR	LIGHT GREY		

1) ALL SPECIFICATIONS ARE SUBJECTED TO CHANGE BY THE MANUFACTURER WITHOUT PRIOR NOTICE.

Components Data (R22)

MODEL	**INDOOR UNIT**				**ACC 25CR**
	OUTDOOR UNIT				**ALC 25CR**
INDOOR FAN	**TYPE**				CENTRIFUGAL
	QUANTITY				2
	MATERIAL				GALVANIZED STEEL
	DRIVE				DIRECT
	DIAMETER			**mm/in**	160 / 6.30
	LENGTH			**mm/in**	202 / 7.95
INDOOR FAN MOTOR	**TYPE**				INDUCTION
	QUANTITY				1
	INDEX OF PROTECTION (IP)				N/A
OUTDOOR FAN	**TYPE**				PROPELLER
	QUANTITY				1
	MATERIAL				GLASS REINFORCED ACRYL STYRENE RESIN
	DRIVE				DIRECT
	DIAMETER			**mm/in**	457 / 18
OUTDOOR FAN MOTOR	**TYPE**				INDUCTION
	QUANTITY				1
	INDEX OF PROTECTION (IP)				~~IP44~~ IP 23
COMPRESSOR	**TYPE**				ROTARY
	OIL TYPE				ATMOS M60 or SUNISO 4GDID
	OIL AMOUNT			**cm^3 / fl.oz.**	700 / 24.6
INDOOR COIL	**TUBE**	**MATERIAL**			SEAMLESS COPPER
		DIAMETER		**mm/in**	9.52 / 3/8
		THICKNESS		**mm/in**	0.35 / 0.014
	FIN	**MATERIAL**			ALUMINIUM (SLIT FIN)
		THICKNESS		**mm/in**	0.11 / 0.0043
		FACE AREA		**m^2/ft^2**	0.203 / 2.187
		ROW			3
		FIN PER INCH			12
OUTDOOR COIL	**TUBE**	**MATERIAL**			SEAMLESS INNER GROOVE COPPER
		DIAMETER		**mm/in**	7.00 / 0.276
		THICKNESS		**mm/in**	0.28 / 0.011
	FIN	**MATERIAL**			ALUMINIUM (CORRUGATED FIN)
		THICKNESS		**mm/in**	0.10 / 0.004
		FACE AREA		**m^2/ft^2**	0.62 / 6.67
		ROW			2
		FIN PER INCH			18
AIR QUALITY	**FILTER**	**TYPE**			WASHABLE SARANET FILTER
		QUANTITY		**pc**	1
		SIZE	**LENGTH**	**mm/in**	995 / 39.17
			WIDTH	**mm/in**	195 / 7.68
			THICKNESS	**mm/in**	5 / 0.20
CASING	**INDOOR UNIT**			**MATERIAL**	GALVANIZED STEEL
				FINISHING	WITH PE INSULATION
				COLOUR	WITHOUT POWDER PAINT
	OUTDOOR UNIT			**MATERIAL**	GALVANIZED MILD STEEL
				FINISHING	POLYESTER POWDER
				COLOUR	LIGHT GREY

1) ALL SPECIFICATIONS ARE SUBJECTED TO CHANGE BY THE MANUFACTURER WITHOUT PRIOR NOTICE.

Components Data (R22)

MODEL	INDOOR UNIT			ACC 28CR	
	OUTDOOR UNIT			ALC 28CR	ALC ~~30CR~~ 30DR
INDOOR FAN	TYPE			CENTRIFUGAL	
	QUANTITY			2	
	MATERIAL			GALVANIZED STEEL	
	DRIVE			DIRECT	
	DIAMETER		mm/in	185 / 7.28	
	LENGTH		mm/in	203 / 7.99	
INDOOR FAN MOTOR	TYPE			INDUCTION	
	QUANTITY			1	
	INDEX OF PROTECTION (IP)			N/A	
OUTDOOR FAN	TYPE			PROPELLER	
	QUANTITY			1	
	MATERIAL			GLASS REINFORCED ACRYL STYRENE RESIN	
	DRIVE			DIRECT	
	DIAMETER		mm/in	457 / 18	609.6 / 24
OUTDOOR FAN MOTOR	TYPE			INDUCTION	
	QUANTITY			1	
	INDEX OF PROTECTION (IP)			~~IP24~~ IP 23	~~IP44~~ IP 54
COMPRESSOR	TYPE			ROTARY	SCROLL
	OIL TYPE			ATMOS M60 or SUNISO 4GDID	MINERAL (Sontex 200 LT)
	OIL AMOUNT		cm^3 / fl.oz.	1130 / 39.8	1240 / 43.6
INDOOR COIL	TUBE	MATERIAL		SEAMLESS COPPER	
		DIAMETER	mm/in	9.52 / 3/8	
		THICKNESS	mm/in	0.36 / 0.014	
	FIN	MATERIAL		ALUMINIUM (CORR. FIN)	
		THICKNESS	mm/in	0.127 / 0.005	
		FACE AREA	m^2/ft^2	0.24 / 2.62	
		ROW		3	
		FIN PER INCH		14	
OUTDOOR COIL	TUBE	MATERIAL		SEAMLESS INNER GROOVE COPPER	SEAMLESS COPPER
		DIAMETER	mm/in	9.52 / 3/8	9.52 / 3/8
		THICKNESS	mm/in	0.33 / 0.013	0.35 / 0.014
	FIN	MATERIAL		ALUMINIUM (SLIT FIN)	ALUMINIUM (CORRUGTED FIN)
		THICKNESS	mm/in	0.127 / 0.005	0.127 / 0.005
		FACE AREA	m^2/ft^2	0.61 / 6.52	0.87 / 9.33
		ROW		2	2
		FIN PER INCH		18	16
AIR QUALITY	FILTER	TYPE		WASHABLE SARANET FILTER	
		QUANTITY	pc	2	
		SIZE LENGTH	mm/in	456 / 17.95	
		SIZE WIDTH	mm/in	210 / 8.27	
		SIZE THICKNESS	mm/in	5 / 0.20	
CASING	INDOOR UNIT		MATERIAL	GALVANIZED STEEL	
			FINISHING	WITH PE INSULATION	
			COLOUR	WITHOUT POWDER PAINT	
	OUTDOOR UNIT		MATERIAL	GALVANIZED MILD STEEL	
			FINISHING	POLYESTER POWDER	
			COLOUR	LIGHT GREY	

1) ALL SPECIFICATIONS ARE SUBJECTED TO CHANGE BY THE MANUFACTURER WITHOUT PRIOR NOTICE.

Components Data (R22)

MODEL	INDOOR UNIT			ACC 38CR		
	OUTDOOR UNIT			ALC ~~35CR~~ 35DR	ALC ~~40CR~~ 40DR	
INDOOR FAN	TYPE			CENTRIFUGAL		
	QUANTITY			2		
	MATERIAL			GALVANIZED STEEL		
	DRIVE			DIRECT		
	DIAMETER		mm/in	214 / 8.43		
	LENGTH		mm/in	203.2 / 8.00		
INDOOR FAN MOTOR	TYPE			INDUCTION		
	QUANTITY			1		
	INDEX OF PROTECTION (IP)			N/A		
OUTDOOR FAN	TYPE			PROPELLER		
	QUANTITY			1		
	MATERIAL			GLASS REINFORCED ACRYL STYRENE RESIN		
	DRIVE			DIRECT		
	DIAMETER		mm/in	609.6 / 24		
OUTDOOR FAN MOTOR	TYPE			INDUCTION		
	QUANTITY			1		
	INDEX OF PROTECTION (IP)			~~IP44~~ IP 54		
COMPRESSOR	TYPE			SCROLL		
	OIL TYPE			MINERAL (Sontex 200 LT)	MINERAL (Sontex 200 LT)	
	OIL AMOUNT		cm^3 / fl.oz.	1240 / 43.6	1240 / 43.6	
INDOOR COIL	TUBE	MATERIAL		SEAMLESS COPPER		
		DIAMETER	mm/in	9.52 / 3/8		
		THICKNESS	mm/in	0.36 / 0.014		
	FIN	MATERIAL		ALUMINIUM (CORR. FIN)		
		THICKNESS	mm/in	0.127 / 0.005		
		FACE AREA	m^2/ft^2	0.34 / 3.61		
		ROW		3		
		FIN PER INCH		14		
OUTDOOR COIL	TUBE	MATERIAL		SEAMLESS INNER GROOVE COPPER		
		DIAMETER	mm/in	9.52 / 3/8		
		THICKNESS	mm/in	0.33 / 0.013		
	FIN	MATERIAL		ALUMINIUM (CORR. FIN)		
		THICKNESS	mm/in	0.127 / 0.005		
		FACE AREA	m^2/ft^2	0.87 / 9.33		
		ROW		2		
		FIN PER INCH		14		
AIR QUALITY	FILTER	TYPE		WASHABLE SARANET FILTER		
		QUANTITY	pc	2		
		SIZE LENGTH	mm/in	608 / 23.94		
		SIZE WIDTH	mm/in	230 / 9.06		
		SIZE THICKNESS	mm/in	5 / 0.20		
CASING	INDOOR UNIT		MATERIAL	GALVANIZED STEEL		
			FINISHING	WITH PE INSULATION		
			COLOUR	WITHOUT POWDER PAINT		
	OUTDOOR UNIT		MATERIAL	GALVANIZED MILD STEEL		
			FINISHING	POLYESTER POWDER		
			COLOUR	LIGHT GREY		

1) ALL SPECIFICATIONS ARE SUBJECTED TO CHANGE BY THE MANUFACTURER WITHOUT PRIOR NOTICE.

Components Data (R22)

MODEL	INDOOR UNIT			ACC 30CR	
	OUTDOOR UNIT			ALC 28CR	ALC ~~30CR~~ 30DR
INDOOR FAN	TYPE			CENTRIFUGAL	
	QUANTITY			2	
	MATERIAL			GALVANIZED STEEL	
	DRIVE			DIRECT	
	DIAMETER		mm/in	214 / 8.43	
	LENGTH		mm/in	203.2 / 8.00	
INDOOR FAN MOTOR	TYPE			INDUCTION	
	QUANTITY			1	
	INDEX OF PROTECTION (IP)			N/A	
OUTDOOR FAN	TYPE			PROPELLER	
	QUANTITY			1	
	MATERIAL			GLASS REINFORCED ACRYL STYRENE RESIN	
	DRIVE			DIRECT	
	DIAMETER		mm/in	457 / 18	609.6 / 24
OUTDOOR FAN MOTOR	TYPE			INDUCTION	
	QUANTITY			1	
	INDEX OF PROTECTION (IP)			~~IP24~~ IP 23	~~IP44~~ IP 54
COMPRESSOR	TYPE			ROTARY	SCROLL
	OIL TYPE			ATMOS M60 or SUNISO 4GDID	MINERAL (Sontex 200 LT)
	OIL AMOUNT		cm^3 / fl.oz.	1130 / 39.8	1240 / 43.6
INDOOR COIL	TUBE	MATERIAL		SEAMLESS COPPER	
		DIAMETER	mm/in	9.52 / 3/8	
		THICKNESS	mm/in	0.36 / 0.014	
	FIN	MATERIAL		ALUMINIUM (CORR. FIN)	
		THICKNESS	mm/in	0.127 / 0.005	
		FACE AREA	m^2/ft^2	0.277 / 2.98	
		ROW		3	
		FIN PER INCH		12	
OUTDOOR COIL	TUBE	MATERIAL		SEAMLESS INNER GROOVE COPPER	SEAMLESS COPPER
		DIAMETER	mm/in	9.52 / 3/8	9.52 / 3/8
		THICKNESS	mm/in	0.33 / 0.013	0.35 / 0.014
	FIN	MATERIAL		ALUMINIUM (SLIT FIN)	ALUMINIUM (CORR. FIN)
		THICKNESS	mm/in	0.127 / 0.005	0.127 / 0.005
		FACE AREA	m^2/ft^2	0.61 / 6.52	0.87 / 9.33
		ROW		2	2
		FIN PER INCH		18	16
AIR QUALITY	FILTER	TYPE		WASHABLE SARANET FILTER	
		QUANTITY	pc	2	
		SIZE LENGTH	mm/in	449 / 17.68	
		SIZE WIDTH	mm/in	305 / 12.01	
		SIZE THICKNESS	mm/in	5 / 0.20	
CASING	INDOOR UNIT		MATERIAL	GALVANIZED STEEL	
			FINISHING	WITH PE INSULATION	
			COLOUR	WITHOUT POWDER PAINT	
	OUTDOOR UNIT		MATERIAL	GALVANIZED MILD STEEL	
			FINISHING	POLYESTER POWDER	
			COLOUR	LIGHT GREY	

1) ALL SPECIFICATIONS ARE SUBJECTED TO CHANGE BY THE MANUFACTURER WITHOUT PRIOR NOTICE.

Components Data (R22)

MODEL	INDOOR UNIT				ACC 40CR	
	OUTDOOR UNIT				ALC ~~35CR~~ 35DR	ALC ~~40CR~~ 40DR
INDOOR FAN	TYPE				CENTRIFUGAL	
	QUANTITY				2	
	MATERIAL				GALVANIZED STEEL	
	DRIVE				DIRECT	
	DIAMETER			mm/in	214 / 8.43	
	LENGTH			mm/in	203.2 / 8.00	
INDOOR FAN MOTOR	TYPE				INDUCTION	
	QUANTITY				1	
	INDEX OF PROTECTION (IP)				N/A	
OUTDOOR FAN	TYPE				PROPELLER	
	QUANTITY				1	
	MATERIAL				GLASS REINFORCED ACRYL STYRENE RESIN	
	DRIVE				DIRECT	
	DIAMETER			mm/in	609.6 / 24	
OUTDOOR FAN MOTOR	TYPE				INDUCTION	
	QUANTITY				1	
	INDEX OF PROTECTION (IP)				~~IP44~~ IP 54	
COMPRESSOR	TYPE				SCROLL	
	OIL TYPE				MINERAL (Sontex 200 LT)	MINERAL (Sontex 200 LT)
	OIL AMOUNT			cm^3 / fl.oz.	1240 / 43.6	1240 / 43.6
INDOOR COIL	TUBE	MATERIAL			SEAMLESS COPPER	
		DIAMETER		mm/in	9.52 / 3/8	
		THICKNESS		mm/in	0.36 / 0.014	
	FIN	MATERIAL			ALUMINIUM (CORR. FIN)	
		THICKNESS		mm/in	0.127 / 0.005	
		FACE AREA		m^2/ft^2	0.31 / 3.44	
		ROW			3	
		FIN PER INCH			14	
OUTDOOR COIL	TUBE	MATERIAL			SEAMLESS INNER GROOVE COPPER	
		DIAMETER		mm/in	9.52 / 3/8	
		THICKNESS		mm/in	0.33 / 0.013	
	FIN	MATERIAL			ALUMINIUM (CORR. FIN)	
		THICKNESS		mm/in	0.127 / 0.005	
		FACE AREA		m^2/ft^2	0.87 / 9.33	
		ROW			2	
		FIN PER INCH			16	
AIR QUALITY	FILTER	TYPE			WASHABLE SARANET FILTER	
		QUANTITY		pc	2	
		SIZE	LENGTH	mm/in	507 / 19.96	
			WIDTH	mm/in	305 / 12.01	
			THICKNESS	mm/in	5 / 0.20	
CASING	INDOOR UNIT			MATERIAL	GALVANIZED STEEL	
				FINISHING	WITH PE INSULATION	
				COLOUR	WITHOUT POWDER PAINT	
	OUTDOOR UNIT			MATERIAL	GALVANIZED MILD STEEL	
				FINISHING	POLYESTER POWDER	
				COLOUR	LIGHT GREY	

1) ALL SPECIFICATIONS ARE SUBJECTED TO CHANGE BY THE MANUFACTURER WITHOUT PRIOR NOTICE.

Components Data (R22)

MODEL	INDOOR UNIT				ACC 50CR	ACC 60CR
	OUTDOOR UNIT				ALC ~~50CR~~ 50DR	ALC ~~61CR~~ 61DR
INDOOR FAN	TYPE				CENTRIFUGAL	
	QUANTITY				2	
	MATERIAL				GALVANIZED STEEL	
	DRIVE				DIRECT	
	DIAMETER			mm/in	214 / 8.43	
	LENGTH			mm/in	203.2 / 8.00	
INDOOR FAN MOTOR	TYPE				INDUCTION	
	QUANTITY				1	
	INDEX OF PROTECTION (IP)				N/A	
OUTDOOR FAN	TYPE				PROPELLER	
	QUANTITY				1	
	MATERIAL				GLASS REINFORCED ACRYL STYRENE RESIN	
	DRIVE				DIRECT	
	DIAMETER			mm/in	609.6 / 24	
OUTDOOR FAN MOTOR	TYPE				INDUCTION	
	QUANTITY				1	
	INDEX OF PROTECTION (IP)				~~IP44~~ N/A	- N/A
COMPRESSOR	TYPE				SCROLL	
	OIL TYPE				MINERAL (Sontex 200 LT)	MINERAL (Sontex 200 LT)
	OIL AMOUNT			cm^3 / fl.oz.	1950 / 68.6	1705 / 60.0
INDOOR COIL	TUBE	MATERIAL			SEAMLESS COPPER	
		DIAMETER		mm/in	9.52 / 3/8	
		THICKNESS		mm/in	0.35 / 0.014	
	FIN	MATERIAL			ALUMINIUM (CORR. FIN)	ALUMINIUM (CORR. FIN)
		THICKNESS		mm/in	0.127 / 0.005	0.127 / 0.005
		FACE AREA		m^2/ft^2	0.40 / 4.40	0.47 / 5.16
		ROW			3	3
		FIN PER INCH			14	14
OUTDOOR COIL	TUBE	MATERIAL			SEAMLESS COPPER	SEAMLESS INNER GROOVED COPPER
		DIAMETER		mm/in	9.52 / 3/8	9.52 / 3/8
		THICKNESS		mm/in	0.35 / 0.014	0.33 / 0.013
	FIN	MATERIAL			ALUMINIUM (CORR. FIN)	ALUMINIUM (CORR. FIN)
		THICKNESS		mm/in	0.127 / 0.005	0.127 / 0.005
		FACE AREA		m^2/ft^2	0.87 / 9.33	0.84 / 9.04
		ROW			2	3
		FIN PER INCH			16	14
AIR QUALITY	FILTER	TYPE			WASHABLE SARANET FILTER	
		QUANTITY		pc	2	
		SIZE	LENGTH	mm/in	634 / 24.96	734 / 28.90
			WIDTH	mm/in	305 / 12.01	305 / 12.01
			THICKNESS	mm/in	5 / 0.20	5 / 0.20
CASING	INDOOR UNIT			MATERIAL	GALVANIZED STEEL	
				FINISHING	WITH PE INSULATION	
				COLOUR	WITHOUT POWDER PAINT	
	OUTDOOR UNIT			MATERIAL	GALVANIZED MILD STEEL	
				FINISHING	POLYESTER POWDER	
				COLOUR	LIGHT GREY	

1) ALL SPECIFICATIONS ARE SUBJECTED TO CHANGE BY THE MANUFACTURER WITHOUT PRIOR NOTICE.

Components Data (R410A)

MODEL	INDOOR UNIT			A5CC 10C	A5CC 15C
	OUTDOOR UNIT			A5LC 10C	A5LC 15C
INDOOR FAN	TYPE			CENTRIFUGAL	
	QUANTITY			1	2
	MATERIAL			GALVANIZED STEEL	
	DRIVE			DIRECT	
	DIAMETER		mm/in	160 / 6.30	
	LENGTH		mm/in	202 / 7.95	
INDOOR FAN MOTOR	TYPE			INDUCTION	
	QUANTITY			1	
	INDEX OF PROTECTION (IP)			N/A	
OUTDOOR FAN	TYPE			PROPELLER	
	QUANTITY			1	
	MATERIAL			GLASS REINFORCED ACRYL STYRENE RESIN	
	DRIVE			DIRECT	
	DIAMETER		mm/in	404 / 16	
OUTDOOR FAN MOTOR	TYPE			INDUCTION	
	QUANTITY			1	
	INDEX OF PROTECTION (IP)			IP23	
COMPRESSOR	TYPE			ROTARY	
	OIL TYPE			RB68A or Freol Alpha68M	
	OIL AMOUNT		cm^3 / fl.oz.	350 / 12.3	430 / 15.1
INDOOR COIL	TUBE	MATERIAL		SEAMLESS INNER GROOVE COPPER	
		DIAMETER	mm/in	7.00 / 0.276	
		THICKNESS	mm/in	0.28 / 0.011	
	FIN	MATERIAL		ALUMINIUM (CORR. FIN)	ALUMINIUM (CORR. FIN)
		THICKNESS	mm/in	0.11 / 0.0043	0.11 / 0.0043
		FACE AREA	m^2/ft^2	0.115 / 1.238	0.143 / 1.542
		ROW		3	3
		FIN PER INCH		18	18
OUTDOOR COIL	TUBE	MATERIAL		SEAMLESS INNER GROOVE COPPER	
		DIAMETER	mm/in	7.00 / 0.276	
		THICKNESS	mm/in	0.28 / 0.011	
	FIN	MATERIAL		ALUMINIUM (SLIT FIN)	ALUMINIUM (SLIT FIN)
		THICKNESS	mm/in	0.10 / 0.004	0.10 / 0.004
		FACE AREA	m^2/ft^2	0.360 / 3.94	0.360 / 3.940
		ROW		1	1
		FIN PER INCH		18	20
AIR QUALITY	FILTER	TYPE		WASHABLE SARANET FILTER	
		QUANTITY	pc	1	
		SIZE LENGTH	mm/in	560 / 22.05	700 / 27.56
		SIZE WIDTH	mm/in	195 / 7.68	195 / 7.68
		SIZE THICKNESS	mm/in	5 / 0.20	5 / 0.20
CASING	INDOOR UNIT		MATERIAL	GALVAZINED STEEL	
			FINISHING	WITH PE INSULATION	
			COLOUR	WITHOUT POWDER PAINT	
	OUTDOOR UNIT		MATERIAL	GALVANIZED MILD STEEL	
			FINISHING	POLYESTER POWDER	
			COLOUR	LIGHT GREY	

1) ALL SPECIFICATIONS ARE SUBJECTED TO CHANGE BY THE MANUFACTURER WITHOUT PRIOR NOTICE.

Components Data (R410A)

MODEL	**INDOOR UNIT**				**A5CC 20C**	**A5CC 25C**
	OUTDOOR UNIT				**A5LC 20C**	**A5LC 25C**
INDOOR FAN	**TYPE**				CENTRIFUGAL	
	QUANTITY				2	
	MATERIAL				GALVANIZED STEEL	
	DRIVE				DIRECT	
	DIAMETER			**mm/in**	160 / 6.30	
	LENGTH			**mm/in**	202 / 7.95	
INDOOR FAN MOTOR	**TYPE**				INDUCTION	
	QUANTITY				1	
	INDEX OF PROTECTION (IP)				N/A	
OUTDOOR FAN	**TYPE**				PROPELLER	
	QUANTITY				1	
	MATERIAL				GLASS REINFORCED ACRYL STYRENE RESIN	
	DRIVE				DIRECT	
	DIAMETER			**mm/in**	457 / 18	
OUTDOOR FAN MOTOR	**TYPE**				INDUCTION	
	QUANTITY				1	
	INDEX OF PROTECTION (IP)				IP 44	~~IP4 4~~ IP 23
COMPRESSOR	**TYPE**				ROTARY	
	OIL TYPE				RB68A or Freol Alpha68M	
	OIL AMOUNT			**cm^3 / fl.oz.**	670 / 23.6	1130 / 39.8
INDOOR COIL	**TUBE**	**MATERIAL**			SEAMLESS INNER GROOVE COPPER	
		DIAMETER		**mm/in**	7.00 / 0.276	
		THICKNESS		**mm/in**	0.28 / 0.011	
	FIN	**MATERIAL**			ALUMINIUM (SLIT FIN)	ALUMINIUM (SLIT FIN)
		THICKNESS		**mm/in**	0.11 / 0.0043	0.11 / 0.0043
		FACE AREA		**m^2/ft^2**	0.176 / 1.892	0.203 / 2.187
		ROW			3	3
		FIN PER INCH			18	18
OUTDOOR COIL	**TUBE**	**MATERIAL**			SEAMLESS INNER GROOVE COPPER	
		DIAMETER		**mm/in**	7.00 / 0.276	
		THICKNESS		**mm/in**	0.28 / 0.011	
	FIN	**MATERIAL**			ALUMINIUM (RAISE LANCE)	ALUMINIUM (RAISE LANCE)
		THICKNESS		**mm/in**	0.10 / 0.004	0.10 / 0.004
		FACE AREA		**m^2/ft^2**	0.510 / 5.460	0.620 / 6.630
		ROW			2	2
		FIN PER INCH			18	18
AIR QUALITY	**FILTER**	**TYPE**			WASHABLE SARANET FILTER	
		QUANTITY		**pc**	1	
		SIZE	**LENGTH**	**mm/in**	860 / 33.86	995 / 39.17
			WIDTH	**mm/in**	195 / 7.68	195 / 7.68
			THICKNESS	**mm/in**	5 / 0.20	5 / 0.20
CASING	**INDOOR UNIT**			**MATERIAL**	GALVANIZED STEEL	
				FINISHING	WITH PE INSULATION	
				COLOUR	WITHOUT POWDER PAINT	
	OUTDOOR UNIT			**MATERIAL**	GALVANIZED MILD STEEL	
				FINISHING	POLYESTER POWDER	
				COLOUR	LIGHT GREY	

1) ALL SPECIFICATIONS ARE SUBJECTED TO CHANGE BY THE MANUFACTURER WITHOUT PRIOR NOTICE.

Components Data (R410A)

MODEL	**INDOOR UNIT**			**A5CC 28C**
	OUTDOOR UNIT			**A5LC 28C**
INDOOR FAN	**TYPE**			CENTRIFUGAL
	QUANTITY			2
	MATERIAL			GALVANIZED STEEL
	DRIVE			DIRECT
	DIAMETER		**mm/in**	185 / 7.28
	LENGTH		**mm/in**	203 / 7.99
INDOOR FAN MOTOR	**TYPE**			INDUCTION
	QUANTITY			1
	INDEX OF PROTECTION (IP)			N/A
OUTDOOR FAN	**TYPE**			PROPELLER
	QUANTITY			1
	MATERIAL			GLASS REINFORCED ACRYL STYRENE RESIN
	DRIVE			DIRECT
	DIAMETER		**mm/in**	457 / 18
OUTDOOR FAN MOTOR	**TYPE**			INDUCTION
	QUANTITY			1
	INDEX OF PROTECTION (IP)			~~IP24~~ IP 23
COMPRESSOR	**TYPE**			ROTARY
	OIL TYPE			RB68A or Freol Alpha68M
	OIL AMOUNT		**cm^3/ fl.oz.**	1130 / 39.8
INDOOR COIL	**TUBE**	**MATERIAL**		SEAMLESS INNER GROOVE COPPER
		DIAMETER	**mm/in**	7.00 / 0.276
		THICKNESS	**mm/in**	0.28 / 0.011
	FIN	**MATERIAL**		ALUMINIUM (HYDROPHILIC FIN)
		THICKNESS	**mm/in**	0.11 / 0.0043
		FACE AREA	**m^2/ft^2**	0.24 / 2.62
		ROW		3
		FIN PER INCH		18
OUTDOOR COIL	**TUBE**	**MATERIAL**		SEAMLESS INNER GROOVE COPPER
		DIAMETER	**mm/in**	7.00 / 0.276
		THICKNESS	**mm/in**	0.28 / 0.011
	FIN	**MATERIAL**		ALUMINIUM (RAISE LANCE)
		THICKNESS	**mm/in**	0.11 / 0.0043
		FACE AREA	**m^2/ft^2**	0.620 / 6.630
		ROW		2
		FIN PER INCH		18
AIR QUALITY	**FILTER**	**TYPE**		WASHABLE SARANET FILTER
		QUANTITY	**pc**	2
		SIZE **LENGTH**	**mm/in**	456 / 17.95
		SIZE **WIDTH**	**mm/in**	210 / 8.27
		SIZE **THICKNESS**	**mm/in**	5 / 0.20
CASING	**INDOOR UNIT**		**MATERIAL**	GALVANIZED STEEL
			FINISHING	WITH PE INSULATION
			COLOUR	WITHOUT POWDER PAINT
	OUTDOOR UNIT		**MATERIAL**	GALVANIZED MILD STEEL
			FINISHING	POLYESTER POWDER
			COLOUR	LIGHT GREY

1) ALL SPECIFICATIONS ARE SUBJECTED TO CHANGE BY THE MANUFACTURER WITHOUT PRIOR NOTICE.

Components Data (R410A)

MODEL	INDOOR UNIT			A5CC 38C	
	OUTDOOR UNIT			A5LC ~~35C~~ 35D	A5LC ~~40C~~ 40D
INDOOR FAN	TYPE			CENTRIFUGAL	CENTRIFUGAL
	QUANTITY			2	2
	MATERIAL			GALVANIZED STEEL	GALVANIZED STEEL
	DRIVE			DIRECT	DIRECT
	DIAMETER		mm/in	214 / 8.43	214 / 8.43
	LENGTH		mm/in	203.2 / 8.00	203.2 / 8.00
INDOOR FAN MOTOR	TYPE			INDUCTION	INDUCTION
	QUANTITY			1	1
	INDEX OF PROTECTION (IP)			N/A	N/A
OUTDOOR FAN	TYPE			PROPELLER	PROPELLER
	QUANTITY			1	1
	MATERIAL			GLASS REINFORCED ACRYL STYRENE RESIN	GLASS REINFORCED ACRYL STYRENE RESIN
	DRIVE			DIRECT	DIRECT
	DIAMETER		mm/in	609.6 / 24	609.6 / 24
OUTDOOR FAN MOTOR	TYPE			INDUCTION	INDUCTION
	QUANTITY			1	1
	INDEX OF PROTECTION (IP)			~~IP44~~ IP 54	~~IP44~~ IP 54
COMPRESSOR	TYPE			SCROLL	SCROLL
	OIL TYPE			MOBIL EAL ARCTIC 22CC	MOBIL EAL ARCTIC 22CC
	OIL AMOUNT		cm^3 / fl.oz.	1242 / 42	1951 / 68.7
INDOOR COIL	TUBE	MATERIAL		SEAMLESS INNER GROOVE COPPER	SEAMLESS INNER GROOVE COPPER
		DIAMETER	mm/in	7.00 / 0.276	7.00 / 0.276
		THICKNESS	mm/in	0.28 / 0.011	0.28 / 0.011
	FIN	MATERIAL		ALUMINIUM (HYDROPHILIC FIN)	ALUMINIUM (HYDROPHILIC FIN)
		THICKNESS	mm/in	0.11 / 0.0043	0.11 / 0.0043
		FACE AREA	m^2/ft^2	0.34 / 3.61	0.34 / 3.61
		ROW		3	3
		FIN PER INCH		18	18
OUTDOOR COIL	TUBE	MATERIAL		SEAMLESS INNER GROOVE COPPER	SEAMLESS INNER GROOVE COPPER
		DIAMETER	mm/in	7.00 / 0.276	7.00 / 0.276
		THICKNESS	mm/in	0.28 / 0.011	0.28 / 0.011
	FIN	MATERIAL		ALUMINIUM (CORR. FIN)	ALUMINIUM (CORR. FIN)
		THICKNESS	mm/in	0.11 / 0.004	0.10 / 0.0039
		FACE AREA	m^2/ft^2	0.85 / 9.15	0.87 / 9.33
		ROW		2	2
		FIN PER INCH		18	18
AIR QUALITY	FILTER	TYPE		WASHABLE SARANET FILTER	WASHABLE SARANET FILTER
		QUANTITY	pc	2	2
		SIZE LENGTH	mm/in	608 / 23.94	608 / 23.94
		SIZE WIDTH	mm/in	230 / 9.06	230 / 9.06
		SIZE THICKNESS	mm/in	5 / 0.20	5 / 0.20
CASING	INDOOR UNIT		MATERIAL	GALVANIZED STEEL	GALVANIZED STEEL
			FINISHING	WITH PE INSULATION	WITH PE INSULATION
			COLOUR	WITHOUT POWDER PAINT	WITHOUT POWDER PAINT
	OUTDOOR UNIT		MATERIAL	GALVANIZED MILD STEEL	GALVANIZED MILD STEEL
			FINISHING	POLYESTER POWDER	POLYESTER POWDER
			COLOUR	LIGHT GREY	LIGHT GREY

1) ALL SPECIFICATIONS ARE SUBJECTED TO CHANGE BY THE MANUFACTURER WITHOUT PRIOR NOTICE.

Components Data (R410A)

MODEL	INDOOR UNIT				A5CC 50C	A5CC 60C
	OUTDOOR UNIT				A5LC ~~50C~~ 50D	A5LC ~~61C~~ 61D
INDOOR FAN	TYPE				CENTRIFUGAL	
	QUANTITY				2	
	MATERIAL				GALVANIZED STEEL	
	DRIVE				DIRECT	
	DIAMETER			mm/in	214 / 8.43	
	LENGTH			mm/in	203.2 / 8.00	
INDOOR FAN MOTOR	TYPE				INDUCTION	
	QUANTITY				1	
	INDEX OF PROTECTION (IP)				N/A	
OUTDOOR FAN	TYPE				PROPELLER	
	QUANTITY				1	
	MATERIAL				GLASS REINFORCED ACRYL STYRENE RESIN	
	DRIVE				DIRECT	
	DIAMETER			mm/in	609.6 / 24	
OUTDOOR FAN MOTOR	TYPE				INDUCTION	
	QUANTITY				1	
	INDEX OF PROTECTION (IP)				- ~~N/A~~	IP54
COMPRESSOR	TYPE				SCROLL	
	OIL TYPE				MOBIL EAL ARCTIC 22CC	MOBIL EAL ARCTIC 22CC
	OIL AMOUNT			cm^3 / fl.oz.	1656 / 58.3	1591 / 56
INDOOR COIL	TUBE	MATERIAL			SEAMLESS INNER GROOVE COPPER	
		DIAMETER		mm/in	7.00 / 0.276	
		THICKNESS		mm/in	0.28 / 0.011	
	FIN	MATERIAL			ALUMINIUM (HYDROPHILIC FIN)	ALUMINIUM (HYDROPHILIC FIN)
		THICKNESS		mm/in	0.11 / 0.0043	0.11 / 0.0043
		FACE AREA		m^2/ft^2	0.40 / 4.40	0.47 / 5.16
		ROW			3	3
		FIN PER INCH			18	20
OUTDOOR COIL	TUBE	MATERIAL			SEAMLESS COPPER	
		DIAMETER		mm/in	7.00 / 0.276	
		THICKNESS		mm/in	0.28 / 0.011	
	FIN	MATERIAL			ALUMINIUM (CORR. FIN)	ALUMINIUM (CORR. FIN)
		THICKNESS		mm/in	0.10 / 0.0039	0.10 / 0.0039
		FACE AREA		m^2/ft^2	0.87 / 9.33	0.84 / 9.04
		ROW			2	3
		FIN PER INCH			18	18
AIR QUALITY	FILTER	TYPE			WASHABLE SARANET FILTER	
		QUANTITY		pc	2	
		SIZE	LENGTH	mm/in	634 / 24.96	734 / 28.90
			WIDTH	mm/in	305 / 12.01	305 / 12.01
			THICKNESS	mm/in	5 / 0.20	5 / 0.20
CASING	INDOOR UNIT			MATERIAL	GALVANIZED STEEL	
				FINISHING	WITH PE INSULATION	
				COLOUR	WITHOUT POWDER PAINT	
	OUTDOOR UNIT			MATERIAL	GALVANIZED MILD STEEL	
				FINISHING	POLYESTER POWDER	
				COLOUR	LIGHT GREY	

1) ALL SPECIFICATIONS ARE SUBJECTED TO CHANGE BY THE MANUFACTURER WITHOUT PRIOR NOTICE.

Components Data (R410A)

MODEL	INDOOR UNIT			A5CC 10CR	A5CC 15CR
	OUTDOOR UNIT			A5LC 10CR	A5LC 15CR
INDOOR FAN	TYPE			CENTRIFUGAL	
	QUANTITY			1	2
	MATERIAL			GALVANIZED STEEL	
	DRIVE			DIRECT	
	DIAMETER		mm/in	160 / 6.30	
	LENGTH		mm/in	202 / 7.95	
INDOOR FAN MOTOR	TYPE			INDUCTION	
	QUANTITY			1	
	INDEX OF PROTECTION (IP)			N/A	
OUTDOOR FAN	TYPE			PROPELLER	
	QUANTITY			1	
	MATERIAL			GLASS REINFORCED ACRYL STYRENE RESIN	
	DRIVE			DIRECT	
	DIAMETER		mm/in	404 / 16	
OUTDOOR FAN MOTOR	TYPE			INDUCTION	
	QUANTITY			1	
	INDEX OF PROTECTION (IP)			IP23	
COMPRESSOR	TYPE			ROTARY	
	OIL TYPE			RB68A or Freol Alpha68M	
	OIL AMOUNT		cm^3 / fl.oz.	350 / 12.3	430 / 15.1
INDOOR COIL	TUBE	MATERIAL		SEAMLESS INNER GROOVE COPPER	
		DIAMETER	mm/in	7.00 / 0.276	
		THICKNESS	mm/in	0.28 / 0.011	
	FIN	MATERIAL		ALUMINIUM (CORR. FIN)	ALUMINIUM (CORR. FIN)
		THICKNESS	mm/in	0.11 / 0.0043	0.11 / 0.0043
		FACE AREA	m^2/ft^2	0.115 / 1.238	0.143 / 1.542
		ROW		3	3
		FIN PER INCH		18	18
OUTDOOR COIL	TUBE	MATERIAL		SEAMLESS INNER GROOVE COPPER	
		DIAMETER	mm/in	9.52 / 3/8	
		THICKNESS	mm/in	0.33 / 0.013	
	FIN	MATERIAL		ALUMINIUM (SLIT FIN)	
		THICKNESS	mm/in	0.127 / 0.005	
		FACE AREA	m^2/ft^2	0.360 / 3.940	
		ROW		1	
		FIN PER INCH		18	
AIR QUALITY	FILTER	TYPE		WASHABLE SARANET FILTER	
		QUANTITY	pc	1	
		SIZE LENGTH	mm/in	560 / 22.05	
		SIZE WIDTH	mm/in	195 / 7.68	
		SIZE THICKNESS	mm/in	5 / 0.20	
CASING	INDOOR UNIT		MATERIAL	GALVANIZED STEEL	
			FINISHING	WITH PE INSULATION	
			COLOUR	WITHOUT POWDER PAINT	
	OUTDOOR UNIT		MATERIAL	GALVANIZED MILD STEEL	
			FINISHING	POLYESTER POWDER	
			COLOUR	LIGHT GREY	

1) ALL SPECIFICATIONS ARE SUBJECTED TO CHANGE BY THE MANUFACTURER WITHOUT PRIOR NOTICE.

Components Data (R410A)

MODEL	INDOOR UNIT			A5CC 20CR	A5CC 25CR
	OUTDOOR UNIT			A5LC 20CR	A5LC 25CR
INDOOR FAN	TYPE			CENTRIFUGAL	
	QUANTITY			2	
	MATERIAL			GALVANIZED STEEL	
	DRIVE			DIRECT	
	DIAMETER		mm/in	160 / 6.30	
	LENGTH		mm/in	202 / 7.95	
INDOOR FAN MOTOR	TYPE			INDUCTION	
	QUANTITY			1	
	INDEX OF PROTECTION (IP)			N/A	
OUTDOOR FAN	TYPE			PROPELLER	
	QUANTITY			1	
	MATERIAL			GLASS REINFORCED ACRYL STYRENE RESIN	
	DRIVE			DIRECT	
	DIAMETER		mm/in	457 / 18	
OUTDOOR FAN MOTOR	TYPE			INDUCTION	
	QUANTITY			1	
	INDEX OF PROTECTION (IP)			IP 44 ~~IP44~~ IP 23	
COMPRESSOR	TYPE			ROTARY	
	OIL TYPE			RB68A or Freol Alpha68M	
	OIL AMOUNT		cm^3 / fl.oz.	670 / 23.6	1130 / 39.8
INDOOR COIL	TUBE	MATERIAL		SEAMLESS INNER GROOVE COPPER	
		DIAMETER	mm/in	7.00 / 0.276	
		THICKNESS	mm/in	0.28 / 0.011	
	FIN	MATERIAL		ALUMINIUM (SLIT FIN)	ALUMINIUM (SLIT FIN)
		THICKNESS	mm/in	0.11 / 0.0043	0.11 / 0.0043
		FACE AREA	m^2/ft^2	0.176 / 1.892	0.203 / 2.187
		ROW		3	3
		FIN PER INCH		18	18
OUTDOOR COIL	TUBE	MATERIAL		SEAMLESS INNER GROOVE COPPER	
		DIAMETER	mm/in	7.00 / 0.276	
		THICKNESS	mm/in	0.28 / 0.011	
	FIN	MATERIAL		RAISE LANCE	RAISE LANCE
		THICKNESS	mm/in	0.11 / 0.0043	0.11 / 0.0043
		FACE AREA	m^2/ft^2	0.510 / 5.460	0.620 / 6.630
		ROW		2	2
		FIN PER INCH		18	18
AIR QUALITY	FILTER	TYPE		WASHABLE SARANET FILTER	
		QUANTITY	pc	1	
		SIZE LENGTH	mm/in	860 / 33.86	995 / 39.17
		SIZE WIDTH	mm/in	195 / 7.68	195 / 7.68
		SIZE THICKNESS	mm/in	5 / 0.20	5 / 0.20
CASING	INDOOR UNIT		MATERIAL	GALVANIZED STEEL	
			FINISHING	WITH PE INSULATION	
			COLOUR	WITHOUT POWDER PAINT	
	OUTDOOR UNIT		MATERIAL	GALVANIZED MILD STEEL	
			FINISHING	POLYESTER POWDER	
			COLOUR	LIGHT GREY	

1) ALL SPECIFICATIONS ARE SUBJECTED TO CHANGE BY THE MANUFACTURER WITHOUT PRIOR NOTICE.

Components Data (R410A)

MODEL	INDOOR UNIT				A5CC 28CR
	OUTDOOR UNIT				A5LC 28CR
INDOOR FAN	TYPE				CENTRIFUGAL
	QUANTITY				2
	MATERIAL				GALVANIZED STEEL
	DRIVE				DIRECT
	DIAMETER			mm/in	185 / 7.28
	LENGTH			mm/in	203 / 7.99
INDOOR FAN MOTOR	TYPE				INDUCTION
	QUANTITY				1
	INDEX OF PROTECTION (IP)				N/A
OUTDOOR FAN	TYPE				PROPELLER
	QUANTITY				1
	MATERIAL				GLASS REINFORCED ACRYL STYRENE RESIN
	DRIVE				DIRECT
	DIAMETER			mm/in	457 / 18
OUTDOOR FAN MOTOR	TYPE				INDUCTION
	QUANTITY				1
	INDEX OF PROTECTION (IP)				~~IP24~~ IP 23
COMPRESSOR	TYPE				ROTARY
	OIL TYPE				RB68A or Freol Alpha68M
	OIL AMOUNT			cm^3/ fl.oz.	1130 / 39.8
INDOOR COIL	TUBE	MATERIAL			SEAMLESS INNER GROOVE COPPER
		DIAMETER		mm/in	7.00 / 0.276
		THICKNESS		mm/in	0.28 / 0.011
	FIN	MATERIAL			ALUMINIUM (HYDROPHILIC FIN)
		THICKNESS		mm/in	0.11 / 0.0043
		FACE AREA		m^2/ft^2	0.240 / 2.620
		ROW			3
		FIN PER INCH			18
OUTDOOR COIL	TUBE	MATERIAL			SEAMLESS INNER GROOVE COPPER
		DIAMETER		mm/in	7.00 / 0.276
		THICKNESS		mm/in	0.28 / 0.011
	FIN	MATERIAL			ALUMINIUM (RAISE LANCE)
		THICKNESS		mm/in	0.11 / 0.0043
		FACE AREA		m^2/ft^2	0.620 / 6.630
		ROW			2
		FIN PER INCH			18
AIR QUALITY	FILTER	TYPE			WASHABLE SARANET FILTER
		QUANTITY		pc	2
		SIZE	LENGTH	mm/in	456 / 17.95
			WIDTH	mm/in	210 / 8.27
			THICKNESS	mm/in	5 / 0.20
CASING	INDOOR UNIT			MATERIAL	GALVANIZED STEEL
				FINISHING	WITH PE INSULATION
				COLOUR	WITHOUT POWDER PAINT
	OUTDOOR UNIT			MATERIAL	GALVANIZED MILD STEEL
				FINISHING	POLYESTER POWDER
				COLOUR	LIGHT GREY

1) ALL SPECIFICATIONS ARE SUBJECTED TO CHANGE BY THE MANUFACTURER WITHOUT PRIOR NOTICE.

Components Data (R410A)

MODEL	INDOOR UNIT			A5CC 38CR	
	OUTDOOR UNIT			A5LC ~~35CR~~ 35DR	A5LC ~~40CR~~ 40DR
INDOOR FAN	TYPE			CENTRIFUGAL	CENTRIFUGAL
	QUANTITY			2	2
	MATERIAL			GALVANIZED STEEL	GALVANIZED STEEL
	DRIVE			DIRECT	DIRECT
	DIAMETER		mm/in	214 / 8.43	214 / 8.43
	LENGTH		mm/in	203.2 / 8.00	203.2 / 8.00
INDOOR FAN MOTOR	TYPE			INDUCTION	INDUCTION
	QUANTITY			1	1
	INDEX OF PROTECTION (IP)			N/A	N/A
OUTDOOR FAN	TYPE			PROPELLER	PROPELLER
	QUANTITY			1	1
	MATERIAL			GLASS REINFORCED ACRYL STYRENE RESIN	GLASS REINFORCED ACRYL STYRENE RESIN
	DRIVE			DIRECT	DIRECT
	DIAMETER		mm/in	609.6 / 24	609.6 / 24
OUTDOOR FAN MOTOR	TYPE			INDUCTION	INDUCTION
	QUANTITY			1	1
	INDEX OF PROTECTION (IP)			~~IP44~~ IP 54	~~IP44~~ IP 54
COMPRESSOR	TYPE			SCROLL	SCROLL
	OIL TYPE			MOBIL EAL ARCTIC 22CC	MOBIL EAL ARCTIC 22CC
	OIL AMOUNT		cm^3/ fl.oz.	1242 / 42	1951 / 68.7
INDOOR COIL	TUBE	MATERIAL		SEAMLESS INNER GROOVE COPPER	SEAMLESS INNER GROOVE COPPER
		DIAMETER	mm/in	7.00 / 0.276	7.00 / 0.276
		THICKNESS	mm/in	0.28 / 0.011	0.28 / 0.011
	FIN	MATERIAL		ALUMINIUM (HYDROPHILIC FIN)	ALUMINIUM (HYDROPHILIC FIN)
		THICKNESS	mm/in	0.11 / 0.0043	0.11 / 0.0043
		FACE AREA	m^2/ft^2	0.34 / 3.61	0.34 / 3.61
		ROW		3	3
		FIN PER INCH		18	18
OUTDOOR COIL	TUBE	MATERIAL		SEAMLESS INNER GROOVE COPPER	SEAMLESS INNER GROOVE COPPER
		DIAMETER	mm/in	7.00 / 0.276	7.00 / 0.276
		THICKNESS	mm/in	0.28 / 0.011	0.28 / 0.011
	FIN	MATERIAL		ALUMINIUM (CORR. FIN)	ALUMINIUM (CORR. FIN)
		THICKNESS	mm/in	0.11 / 0.004	0.10 / 0.0039
		FACE AREA	m^2/ft^2	0.85 / 9.15	0.87 / 9.33
		ROW		2	2
		FIN PER INCH		18	18
AIR QUALITY	FILTER	TYPE		WASHABLE SARANET FILTER	WASHABLE SARANET FILTER
		QUANTITY	pc	2	2
		SIZE LENGTH	mm/in	608 / 23.94	608 / 23.94
		SIZE WIDTH	mm/in	230 / 9.06	230 / 9.06
		SIZE THICKNESS	mm/in	5 / 0.20	5 / 0.20
CASING	INDOOR UNIT		MATERIAL	GALVANIZED STEEL	GALVANIZED STEEL
			FINISHING	WITH PE INSULATION	WITH PE INSULATION
			COLOUR	WITHOUT POWDER PAINT	WITHOUT POWDER PAINT
	OUTDOOR UNIT		MATERIAL	GALVANIZED MILD STEEL	GALVANIZED MILD STEEL
			FINISHING	POLYESTER POWDER	POLYESTER POWDER
			COLOUR	LIGHT GREY	LIGHT GREY

1) ALL SPECIFICATIONS ARE SUBJECTED TO CHANGE BY THE MANUFACTURER WITHOUT PRIOR NOTICE.

Components Data (R410A)

MODEL	INDOOR UNIT				A5CC 50CR	A5CC 60CR
	OUTDOOR UNIT				A5LC ~~50CR~~ 50DR	A5LC ~~61CR~~ 61DR
INDOOR FAN	TYPE				CENTRIFUGAL	
	QUANTITY				2	
	MATERIAL				GALVANIZED STEEL	
	DRIVE				DIRECT	
	DIAMETER			mm/in	214 / 8.43	
	LENGTH			mm/in	203.2 / 8.00	
INDOOR FAN MOTOR	TYPE				INDUCTION	
	QUANTITY				1	
	INDEX OF PROTECTION (IP)				N/A	
OUTDOOR FAN	TYPE				PROPELLER	
	QUANTITY				1	
	MATERIAL				GLASS REINFORCED ACRYL STYRENE RESIN	
	DRIVE				DIRECT	
	DIAMETER			mm/in	609.6 / 24	
OUTDOOR FAN MOTOR	TYPE				INDUCTION	
	QUANTITY				1	
	INDEX OF PROTECTION (IP)				- N/A	IP54
COMPRESSOR	TYPE				SCROLL	
	OIL TYPE				MOBIL EAL ARCTIC 22CC	MOBIL EAL ARCTIC 22CC
	OIL AMOUNT			cm^3 / fl.oz.	1656 / 58.3	1591 / 56
INDOOR COIL	TUBE	MATERIAL			SEAMLESS INNER GROOVE COPPER	
		DIAMETER		mm/in	7.00 / 0.276	
		THICKNESS		mm/in	0.28 / 0.011	
	FIN	MATERIAL			ALUMINIUM (HYDROPHILIC FIN)	ALUMINIUM (HYDROPHILIC FIN)
		THICKNESS		mm/in	0.11 / 0.0043	0.11 / 0.0043
		FACE AREA		m^2/ft^2	0.40 / 4.40	0.47 / 5.16
		ROW			3	3
		FIN PER INCH			18	20
OUTDOOR COIL	TUBE	MATERIAL			SEAMLESS COPPER	
		DIAMETER		mm/in	7.00 / 0.276	
		THICKNESS		mm/in	0.28 / 0.011	
	FIN	MATERIAL			ALUMINIUM (CORR. FIN)	ALUMINIUM (CORR. FIN)
		THICKNESS		mm/in	0.10 / 0.0039	0.10 / 0.0039
		FACE AREA		m^2/ft^2	0.87 / 9.33	0.84 / 9.04
		ROW			2	3
		FIN PER INCH			18	18
AIR QUALITY	FILTER	TYPE			WASHABLE SARANET FILTER	
		QUANTITY		pc	2	
		SIZE	LENGTH	mm/in	634 / 24.96	734 / 28.90
			WIDTH	mm/in	305 / 12.01	305 / 12.01
			THICKNESS	mm/in	5 / 0.20	5 / 0.20
CASING	INDOOR UNIT			MATERIAL	GALVANIZED STEEL	
				FINISHING	WITH PE INSULATION	
				COLOUR	WITHOUT POWDER PAINT	
	OUTDOOR UNIT			MATERIAL	GALVANIZED MILD STEEL	
				FINISHING	POLYESTER POWDER	
				COLOUR	LIGHT GREY	

1) ALL SPECIFICATIONS ARE SUBJECTED TO CHANGE BY THE MANUFACTURER WITHOUT PRIOR NOTICE.

Safety Devices

MODEL	INDOOR UNIT			ACC 10C	ACC 15C
	OUTDOOR UNIT			ALC 10C	ALC 15C
SAFETY DEVICE	HIGH PRESSURE SWITCH	TYPE		N/A	N/A
		OPEN	kPa / psi	N/A	N/A
		CLOSE	kPa / psi	N/A	N/A
	LOW PRESSURE SWITCH	TYPE		N/A	N/A
		OPEN	kPa / psi	N/A	N/A
		CLOSE	kPa / psi	N/A	N/A
	PHASE SEQUENCER			N/A	N/A
	DISCHARGE THERMOSTAT SETTING		°C / °F	N/A	N/A

MODEL	INDOOR UNIT			ACC 20C	
	OUTDOOR UNIT			ALC 18C	ALC 20C
SAFETY DEVICE	HIGH PRESSURE SWITCH	TYPE		N/A	N/A
		OPEN	kPa / psi	N/A	N/A
		CLOSE	kPa / psi	N/A	N/A
	LOW PRESSURE SWITCH	TYPE		N/A	N/A
		OPEN	kPa / psi	N/A	N/A
		CLOSE	kPa / psi	N/A	N/A
	PHASE SEQUENCER			N/A	N/A
	DISCHARGE THERMOSTAT SETTING		°C / °F	N/A	N/A

MODEL	INDOOR UNIT			ACC 25C
	OUTDOOR UNIT			ALC 25C
SAFETY DEVICE	HIGH PRESSURE SWITCH	TYPE		N/A
		OPEN	kPa / psi	N/A
		CLOSE	kPa / psi	N/A
	LOW PRESSURE SWITCH	TYPE		N/A
		OPEN	kPa / psi	N/A
		CLOSE	kPa / psi	N/A
	PHASE SEQUENCER			N/A
	DISCHARGE THERMOSTAT SETTING		°C / °F	N/A

MODEL	INDOOR UNIT			ACC 28C	
	OUTDOOR UNIT			ALC 28C	ALC ~~30C~~ 30D
SAFETY DEVICE	HIGH PRESSURE SWITCH	TYPE		N/A	NC
		OPEN	kPa / psi	N/A	2937 / 426
		CLOSE	kPa / psi	N/A	2413 / 350
	LOW PRESSURE SWITCH	TYPE		N/A	NC
		OPEN	kPa / psi	N/A	124 / 18
		CLOSE	kPa / psi	N/A	193 / 28
	PHASE SEQUENCER - 1Ø / <3Ø>			N/A	N/A / <YES>
	DISCHARGE THERMOSTAT SETTING - 1Ø / <3Ø>		°C / °F	N/A	N/A / <130 / 266>

1) ALL SPECIFICATIONS ARE SUBJECTED TO CHANGE BY THE MANUFACTURER WITHOUT PRIOR NOTICE.

Safety Devices

MODEL	INDOOR UNIT			ACC 38C	
	OUTDOOR UNIT			ALC ~~35C~~ 35D	ALC ~~40C~~ 40D
SAFETY DEVICE	HIGH PRESSURE SWITCH	TYPE		N/A	NC
		OPEN	kPa / psi	N/A	2937 / 426
		CLOSE	kPa / psi	N/A	2413 / 350
	LOW PRESSURE SWITCH	TYPE		N/A	NC
		OPEN	kPa / psi	N/A	124 / 18
		CLOSE	kPa / psi	N/A	193 / 28
	PHASE SEQUENCER - 1Ø / <3Ø>			N/A	N/A / <YES>
	DISCHARGE THERMOSTAT SETTING - 1Ø / <3Ø>		°C / °F	N/A	N/A / <130 / 266>

MODEL	INDOOR UNIT			ACC 30C	
	OUTDOOR UNIT			ALC 28C	ALC ~~30C~~ 30D
SAFETY DEVICE	HIGH PRESSURE SWITCH	TYPE		N/A	NC
		OPEN	kPa / psi	N/A	2937 / 426
		CLOSE	kPa / psi	N/A	2413 / 350
	LOW PRESSURE SWITCH	TYPE		N/A	NC
		OPEN	kPa / psi	N/A	124 / 18
		CLOSE	kPa / psi	N/A	193 / 28
	PHASE SEQUENCER - 1Ø / <3Ø>			N/A	N/A / <YES>
	DISCHARGE THERMOSTAT SETTING - 1Ø / <3Ø>		°C / °F	N/A	N/A / <130 / 266>

MODEL	INDOOR UNIT			ACC 40C	
	OUTDOOR UNIT			ALC ~~35C~~ 35D	ALC ~~40C~~ 40D
SAFETY DEVICE	HIGH PRESSURE SWITCH	TYPE		N/A	NC
		OPEN	kPa / psi	N/A	2937 / 426
		CLOSE	kPa / psi	N/A	2413 / 350
	LOW PRESSURE SWITCH	TYPE		N/A	NC
		OPEN	kPa / psi	N/A	124 / 18
		CLOSE	kPa / psi	N/A	193 / 28
	PHASE SEQUENCER - 1Ø / <3Ø>			N/A	N/A / <YES>
	DISCHARGE THERMOSTAT SETTING - 1Ø / <3Ø>		°C / °F	N/A	N/A / <130 / 266>

MODEL	INDOOR UNIT			ACC 50C	ACC 60C
	OUTDOOR UNIT			ALC ~~50C~~ 50D	ALC ~~61C~~ 61D
SAFETY DEVICE	HIGH PRESSURE SWITCH	TYPE		NC	
		OPEN	kPa / psi	2937 / 426	
		CLOSE	kPa / psi	2413 / 350	
	LOW PRESSURE SWITCH	TYPE		NC	
		OPEN	kPa / psi	124 / 18	
		CLOSE	kPa / psi	193 / 28	
	PHASE SEQUENCER			YES	
	DISCHARGE THERMOSTAT SETTING		°C / °F	130 / 266	

1) ALL SPECIFICATIONS ARE SUBJECTED TO CHANGE BY THE MANUFACTURER WITHOUT PRIOR NOTICE.

Safety Devices

MODEL	INDOOR UNIT			~~MCC 010CR~~ ACC 10CR	~~MCC 015CR~~ ACC 15CR
	OUTDOOR UNIT			~~MLC 010CR~~ ALC 10CR	~~MLC 015CR~~ ALC 15CR
SAFETY DEVICE	HIGH PRESSURE SWITCH	TYPE		N/A	N/A
		OPEN	kPa / psi	N/A	N/A
		CLOSE	kPa / psi	N/A	N/A
	LOW PRESSURE SWITCH	TYPE		N/A	N/A
		OPEN	kPa / psi	N/A	N/A
		CLOSE	kPa / psi	N/A	N/A
	PHASE SEQUENCER			N/A	N/A
	DISCHARGE THERMOSTAT SETTING		°C / °F	N/A	N/A

MODEL	INDOOR UNIT			~~MCC 020CR~~ ACC 20CR	
	OUTDOOR UNIT			~~MLC 018CR~~ ~~ALC 18CR~~	~~MLC 020CR~~ ALC 20CR
SAFETY DEVICE	HIGH PRESSURE SWITCH	TYPE		N/A	N/A
		OPEN	kPa / psi	N/A	N/A
		CLOSE	kPa / psi	N/A	N/A
	LOW PRESSURE SWITCH	TYPE		N/A	N/A
		OPEN	kPa / psi	N/A	N/A
		CLOSE	kPa / psi	N/A	N/A
	PHASE SEQUENCER			N/A	N/A
	DISCHARGE THERMOSTAT SETTING		°C / °F	N/A	N/A

MODEL	INDOOR UNIT			~~MCC 025CR~~ ACC 25CR
	OUTDOOR UNIT			~~MLC 025CR~~ ALC 25CR
SAFETY DEVICE	HIGH PRESSURE SWITCH	TYPE		N/A
		OPEN	kPa / psi	N/A
		CLOSE	kPa / psi	N/A
	LOW PRESSURE SWITCH	TYPE		N/A
		OPEN	kPa / psi	N/A
		CLOSE	kPa / psi	N/A
	PHASE SEQUENCER			N/A
	DISCHARGE THERMOSTAT SETTING		°C / °F	N/A

MODEL	INDOOR UNIT			ACC 28CR	
	OUTDOOR UNIT			ALC 28CR	ALC ~~30GR~~ 30DR
SAFETY DEVICE	HIGH PRESSURE SWITCH	TYPE		N/A	NC
		OPEN	kPa / psi	N/A	2937 / 426
		CLOSE	kPa / psi	N/A	2413 / 350
	LOW PRESSURE SWITCH	TYPE		N/A	N/A
		OPEN	kPa / psi	N/A	N/A
		CLOSE	kPa / psi	N/A	N/A
	PHASE SEQUENCER - 1Ø / <3Ø>			N/A	N/A / <YES>
	DISCHARGE THERMOSTAT SETTING - 1Ø / <3Ø>		°C / °F	N/A	N/A / <130 / 266>

1) ALL SPECIFICATIONS ARE SUBJECTED TO CHANGE BY THE MANUFACTURER WITHOUT PRIOR NOTICE.

Safety Devices

MODEL	INDOOR UNIT			ACC 38CR	
	OUTDOOR UNIT			ALC ~~35CR~~ 35DR	ALC ~~40CR~~ 40DR
SAFETY DEVICE	HIGH PRESSURE SWITCH	TYPE		N/A	NC
		OPEN	kPa / psi	N/A	2937 / 426
		CLOSE	kPa / psi	N/A	2413 / 350
	LOW PRESSURE SWITCH	TYPE		N/A	N/A
		OPEN	kPa / psi	N/A	N/A
		CLOSE	kPa / psi	N/A	N/A
	PHASE SEQUENCER - 1Ø / <3Ø>			N/A	N/A / <YES>
	DISCHARGE THERMOSTAT SETTING - 1Ø / <3Ø>		°C / °F	N/A	N/A / <130 / 266>

MODEL	INDOOR UNIT			ACC 30CR	
	OUTDOOR UNIT			ALC 28CR	ALC ~~30CR~~ 30DR
SAFETY DEVICE	HIGH PRESSURE SWITCH	TYPE		N/A	NC
		OPEN	kPa / psi	N/A	2937 / 426
		CLOSE	kPa / psi	N/A	2413 / 350
	LOW PRESSURE SWITCH	TYPE		N/A	N/A
		OPEN	kPa / psi	N/A	N/A
		CLOSE	kPa / psi	N/A	N/A
	PHASE SEQUENCER - 1Ø / <3Ø>			N/A	N/A / <YES>
	DISCHARGE THERMOSTAT SETTING - 1Ø / <3Ø>		°C / °F	N/A	N/A / <130 / 266>

MODEL	INDOOR UNIT			ACC 40CR	
	OUTDOOR UNIT			ALC ~~35CR~~ 35DR	ALC ~~40CR~~ 40DR
SAFETY DEVICE	HIGH PRESSURE SWITCH	TYPE		N/A	NC
		OPEN	kPa / psi	N/A	2937 / 426
		CLOSE	kPa / psi	N/A	2413 / 350
	LOW PRESSURE SWITCH	TYPE		N/A	N/A
		OPEN	kPa / psi	N/A	N/A
		CLOSE	kPa / psi	N/A	N/A
	PHASE SEQUENCER - 1Ø / <3Ø>			N/A	N/A / <YES>
	DISCHARGE THERMOSTAT SETTING - 1Ø / <3Ø>		°C / °F	N/A	N/A / <130 / 266>

MODEL	INDOOR UNIT			ACC 50CR	ACC 60CR
	OUTDOOR UNIT			ALC ~~50CR~~ 50DR	ALC ~~61CR~~ 61DR
SAFETY DEVICE	HIGH PRESSURE SWITCH	TYPE		NC	
		OPEN	kPa / psi	2937 / 426	
		CLOSE	kPa / psi	2413 / 350	
	LOW PRESSURE SWITCH	TYPE		N/A	
		OPEN	kPa / psi	N/A	
		CLOSE	kPa / psi	N/A	
	PHASE SEQUENCER			YES	
	DISCHARGE THERMOSTAT SETTING		°C / °F	130 / 266	

1) ALL SPECIFICATIONS ARE SUBJECTED TO CHANGE BY THE MANUFACTURER WITHOUT PRIOR NOTICE.

Safety Devices

MODEL	INDOOR UNIT			A5CC 10C	A5CC 15C
	OUTDOOR UNIT			A5LC 10C	A5LC 15C
SAFETY DEVICE	HIGH PRESSURE SWITCH	TYPE		N/A	N/A
		OPEN	kPa / psi	N/A	N/A
		CLOSE	kPa / psi	N/A	N/A
	LOW PRESSURE SWITCH	TYPE		N/A	N/A
		OPEN	kPa / psi	N/A	N/A
		CLOSE	kPa / psi	N/A	N/A
	PHASE SEQUENCER			N/A	N/A
	DISCHARGE THERMOSTAT SETTING		°C / °F	N/A	N/A

MODEL	INDOOR UNIT			A5CC 20C	A5CC 25C
	OUTDOOR UNIT			A5LC 20C	A5LC 25C
SAFETY DEVICE	HIGH PRESSURE SWITCH	TYPE		N/A	N/A
		OPEN	kPa / psi	N/A	N/A
		CLOSE	kPa / psi	N/A	N/A
	LOW PRESSURE SWITCH	TYPE		N/A	N/A
		OPEN	kPa / psi	N/A	N/A
		CLOSE	kPa / psi	N/A	N/A
	PHASE SEQUENCER - 1Ø / <3Ø>			N/A / <YES>	N/A / <YES>
	DISCHARGE THERMOSTAT SETTING - 1Ø / <3Ø>		°C / °F	N/A / <130 / 266>	N/A / <130 / 266>

MODEL	INDOOR UNIT			A5CC 28C
	OUTDOOR UNIT			A5LC 28C
SAFETY DEVICE	HIGH PRESSURE SWITCH	TYPE		N/A
		OPEN	kPa / psi	N/A
		CLOSE	kPa / psi	N/A
	LOW PRESSURE SWITCH	TYPE		N/A
		OPEN	kPa / psi	N/A
		CLOSE	kPa / psi	N/A
	PHASE SEQUENCER - 1Ø / <3Ø>			N/A / <YES>
	DISCHARGE THERMOSTAT SETTING - 1Ø / <3Ø>		°C / °F	N/A / <130 / 266>

MODEL	INDOOR UNIT			A5CC 38C	
	OUTDOOR UNIT			A5LC ~~35C~~ 35D	A5LC ~~40C~~ 40D
SAFETY DEVICE	HIGH PRESSURE SWITCH	TYPE		NC	NC
		OPEN	kPa / psi	4137 / 600	4137 / 600
		CLOSE	kPa / psi	3310 / 480	3310 / 480
	LOW PRESSURE SWITCH	TYPE		NC	NC
		OPEN	kPa / psi	48 / 7	48 / 7
		CLOSE	kPa / psi	152 / 22	152 / 22
	PHASE SEQUENCER - 1Ø / <3Ø>			N/A / <YES>	N/A / <YES>
	DISCHARGE THERMOSTAT SETTING - 1Ø / <3Ø>		°C / °F	N/A / <130 / 266>	N/A / <130 / 266>

1) ALL SPECIFICATIONS ARE SUBJECTED TO CHANGE BY THE MANUFACTURER WITHOUT PRIOR NOTICE.

Safety Devices

MODEL	INDOOR UNIT			A5CC 50C	A5CC 60C
	OUTDOOR UNIT			A5LC ~~50C~~ 50D	A5LC ~~61C~~ 61D
SAFETY DEVICE	HIGH PRESSURE SWITCH	TYPE		NC	NC
		OPEN	kPa / psi	4137 / 600	4137 / 600
		CLOSE	kPa / psi	3310 / 480	3310 / 480
	LOW PRESSURE SWITCH	TYPE		NC	NC
		OPEN	kPa / psi	48/7	48 / 7
		CLOSE	kPa / psi	152 / 22	152 / 22
	PHASE SEQUENCER			YES	YES
	DISCHARGE THERMOSTAT SETTING		°C / °F	130 / 266	130 / 266

MODEL	INDOOR UNIT			A5CC 10CR	A5CC 15CR
	OUTDOOR UNIT			A5LC 10CR	A5LC 15CR
SAFETY DEVICE	HIGH PRESSURE SWITCH	TYPE		N/A	N/A
		OPEN	kPa / psi	N/A	N/A
		CLOSE	kPa / psi	N/A	N/A
	LOW PRESSURE SWITCH	TYPE		N/A	N/A
		OPEN	kPa / psi	N/A	N/A
		CLOSE	kPa / psi	N/A	N/A
	PHASE SEQUENCER			N/A	N/A
	DISCHARGE THERMOSTAT SETTING		°C / °F	N/A	N/A

MODEL	INDOOR UNIT			A5CC 20CR	A5CC 25CR
	OUTDOOR UNIT			A5LC 20CR	A5LC 25CR
SAFETY DEVICE	HIGH PRESSURE SWITCH	TYPE		N/A	N/A
		OPEN	kPa / psi	N/A	N/A
		CLOSE	kPa / psi	N/A	N/A
	LOW PRESSURE SWITCH	TYPE		N/A	N/A
		OPEN	kPa / psi	N/A	N/A
		CLOSE	kPa / psi	N/A	N/A
	PHASE SEQUENCER - 1Ø / <3Ø>			N/A / <YES>	N/A / <YES>
	DISCHARGE THERMOSTAT SETTING - 1Ø / <3Ø>		°C / °F	N/A / <130 / 266>	N/A / <130 / 266>

MODEL	INDOOR UNIT			A5CC 28CR
	OUTDOOR UNIT			A5LC 28CR
SAFETY DEVICE	HIGH PRESSURE SWITCH	TYPE		N/A
		OPEN	kPa / psi	N/A
		CLOSE	kPa / psi	N/A
	LOW PRESSURE SWITCH	TYPE		N/A
		OPEN	kPa / psi	N/A
		CLOSE	kPa / psi	N/A
	PHASE SEQUENCER - 1Ø / <3Ø>			N/A / <YES>
	DISCHARGE THERMOSTAT SETTING - 1Ø / <3Ø>		°C / °F	N/A / <130 / 266>

1) ALL SPECIFICATIONS ARE SUBJECTED TO CHANGE BY THE MANUFACTURER WITHOUT PRIOR NOTICE.

Safety Devices

MODEL	INDOOR UNIT			A5CC 38CR	
	OUTDOOR UNIT			A5LC ~~35CR~~ 35DR	A5LC ~~40CR~~ 40DR
SAFETY DEVICE	HIGH PRESSURE SWITCH	TYPE		NC	NC
		OPEN	kPa / psi	4137 / 600	4137 / 600
		CLOSE	kPa / psi	3310 / 480	3310 / 480
	LOW PRESSURE SWITCH	TYPE		NC	NC
		OPEN	kPa / psi	48 / 7	48 / 7
		CLOSE	kPa / psi	152 / 22	152 / 22
	PHASE SEQUENCER - 1Ø / <3Ø>			N/A / <YES>	N/A / <YES>
	DISCHARGE THERMOSTAT SETTING - 1Ø / <3Ø>		°C / °F	N/A / <130 / 266>	N/A / <130 / 266>

MODEL	INDOOR UNIT			A5CC 50CR	A5CC 60CR
	OUTDOOR UNIT			A5LC ~~50CR~~ 50DR	A5LC ~~61CR~~ 61DR
SAFETY DEVICE	HIGH PRESSURE SWITCH	TYPE		NC	NC
		OPEN	kPa / psi	4137 / 600	4137 / 600
		CLOSE	kPa / psi	3310 / 480	3310 / 480
	LOW PRESSURE SWITCH	TYPE		NC	NC
		OPEN	kPa / psi	48/7	48 / 7
		CLOSE	kPa / psi	152 / 22	152 / 22
	PHASE SEQUENCER - 1Ø / <3Ø>			YES	YES
	DISCHARGE THERMOSTAT SETTING - 1Ø / <3Ø>		°C / °F	130 / 266	130 / 266

1) ALL SPECIFICATIONS ARE SUBJECTED TO CHANGE BY THE MANUFACTURER WITHOUT PRIOR NOTICE.

7. PERFORMANCE DATA

Calculation Steps

Interpolation method can be used to get the total capacity, TC and sensible capacity, SC and power input, PI at those temperatures which are not stated out in the table. Extrapolation method are not allowed to be used to get the TC, SC and PI.

Example:

Model: ACC10C - ALC10C
Indoor Condition: 25°C DB, 17°C WB
Outdoor Condition: 37°C DB
Fan Speed: High

Solution:

Overall

Based on the Performance Table

1. Refer to the Indoor DB column,
   - **25°C** is located between 24°C and 27°C for 16˚CWB (Thus, Interpolation need to be applied)
   - **25°C** is located between 24°C and 27°C for 19˚CWB (Thus, Interpolation need to be applied)

2. Refer to the Indoor WB column,
   - **17°C** is located between 16°CWB and 19°CWB for 25°CDB
     (Thus, Interpolation need to be applied)

3. Refer to the Outdoor DB column,
   - **37°C** is located between 35°C and 40°C. (Thus, Interpolation need to be applied)

Please follow the steps below in order to get the required capacity.

1st Step
Interpolation of Indoor DB

Find TC, SC, PI for

(a) Indoor: ***25°C DB***, 16°C WB
Outdoor: 35°C DB
(b) Indoor: ***25°C DB***, 19°C WB
Outdoor: 35°C DB

(c) Indoor: ***25°C DB***, 16°C WB
Outdoor: 40°C DB
(d) Indoor: ***25°C DB***, 19°C WB
Outdoor: 40°C DB

2nd Step
Interpolation of Indoor WB

Find TC, SC, PI for

(a) Indoor: 25°C DB, ***17°C WB***
Outdoor: 35°C DB

(b) Indoor: 25°C DB, ***17°C WB***
Outdoor: 40°C DB

3rd Step
Interpolation of Outdoor DB

Find TC, SC, PI for

(a) Indoor: 25°C DB, 17°C WB
Outdoor: ***37°C DB***

Details:

1st Step:

To obtain the Total capacity and Sensible capacity and Power input for

(a) Indoor Condition: *25˚C DB*, 16˚C WB
Outdoor Condition: 35°C DB

Indoor WB ˚C	**Indoor DB ˚C**	**Outdoor DB, ˚C**			
			35		
			TC (kW)	**SHC (kW)**	**PI (kW)**
16					
	24		2.52	2.05	0.88
	25	.....	x_1	y_1	z_1
	27		2.59	2.34	0.89

Total capacity, TC

Interpolation Method:

$$\Rightarrow \frac{25^{o}\,C - 24^{o}\,C}{27^{o}\,C - 24^{o}\,C} = \frac{x_1 - 2.05kW}{2.34kW - 2.05kW}$$

$\Rightarrow x_1 = 2.54kW$

Sensible capacity, SHC

Interpolation Method:

$$\Rightarrow \frac{25^{o}\,C - 24^{o}\,C}{27^{o}\,C - 24^{o}\,C} = \frac{y_1 - 2.05kW}{2.34kW - 2.05kW}$$

$\Rightarrow y_1 = 2.15kW$

Power Input, PI

Interpolation Method:

$$\Rightarrow \frac{25^{o}\,C - 24^{o}\,C}{27^{o}\,C - 24^{o}\,C} = \frac{z_1 - 0.88kW}{0.89kW - 0.88kW}$$

$\Rightarrow z_1 = 0.88kW$

(b) Indoor Condition: *25˚C DB*, 16˚C WB
Outdoor Condition: 40°C DB

Indoor WB ˚C	**Indoor DB ˚C**	**Outdoor DB, ˚C**			
			40		
			TC (kW)	**SHC (kW)**	**PI (kW)**
16					
	24		2.41	2.00	0.94
	25	.....	x_2	y_2	z_2
	27		2.50	2.26	0.95

Total capacity, TC

Interpolation Method:

$$\Rightarrow \frac{25^{o}\,C - 24^{o}\,C}{27^{o}\,C - 24^{o}\,C} = \frac{x_2 - 2.4kW}{2.50kW - 2.41kW}$$

$\Rightarrow x_2 = 2.44kW$

Sensible capacity, SHC

Interpolation Method:

$$\Rightarrow \frac{25^{o}\,C - 24^{o}\,C}{27^{o}\,C - 24^{o}\,C} = \frac{y_2 - 2.00kW}{2.26kW - 2.00kW}$$

$\Rightarrow y_2 = 2.09kW$ 2

Power Input, PI

Interpolation Method:

$$\Rightarrow \frac{25^{o}\,C - 24^{o}\,C}{27^{o}\,C - 24^{o}\,C} = \frac{z_2 - 0.94kW}{0.95kW - 0.94kW}$$

$\Rightarrow z_2 = 0.94kW$

*** Repeat process (a) and (b) in 1st step for the condition below:**

(c) Indoor Condition: *25˚C DB*, 19˚C WB
Outdoor Condition: 35°C DB

$\Rightarrow x_3 = 2.77kW$

$\Rightarrow y_3 = 1.80kW$

$\Rightarrow z_3 = 0.90kW$

(d) Indoor Condition: *25˚C DB*, 19˚C WB
Outdoor Condition: 40°C DB

$\Rightarrow x_4 = 2.65kW$

$\Rightarrow y_4 = 1.75kW$

$\Rightarrow z_4 = 0.96kW$

2 nd Step:

To obtain the Total capacity, Sensible capacity and Power Input for

(a) Indoor Condition: 25°C DB, ***17°C WB***
Outdoor Condition: 35°C DB

Indoor WB ˚C	**Indoor DB ˚C**	**Outdoor DB,˚C**			
			35		
			TC (kW)	**SHC (kW)**	**PI (kW)**
			⋮	⋮	
16			2.54	2.15	0.88
17	**25**	.....	x_5	y_5	z_5
19			2.77	1.80	0.90

Total capacity, TC

Interpolation Method:

$$\Rightarrow \frac{17^oC - 16^oC}{19^oC - 16^oC} = \frac{x_5 - 2.54kW}{2.77kW - 2.54kW}$$

$\Rightarrow x_5 = 2.62kW$

Sensible capacity, SHC

Interpolation Method:

$$\Rightarrow \frac{17^oC - 16^oC}{19^oC - 16^oC} = \frac{y_5 - 2.15kW}{1.80kW - 2.15kW}$$

$\Rightarrow y_5 = 2.03kW$

Power Input, PI

Interpolation Method:

$$\Rightarrow \frac{17^oC - 16^oC}{19^oC - 16^oC} = \frac{z_5 - 0.88kW}{0.90kW - 0.88kW}$$

$\Rightarrow z_5 = 0.89kW$

(b) Indoor Condition: 25°C DB, ***17°C WB***
Outdoor Condition: 40°C DB

Indoor WB ˚C	**Indoor DB ˚C**	**Outdoor DB,˚C**			
			40		
			TC (kW)	**SHC (kW)**	**PI (kW)**
			⋮	⋮	
16			2.44	2.09	0.94
17	**25**	.....	x_6	y_6	z_6
19			2.65	1.75	0.96

Total capacity, TC

Interpolation Method:

$$\Rightarrow \frac{17^oC - 16^oC}{19^oC - 16^oC} = \frac{x_6 - 2.44kW}{2.65kW - 2.44kW}$$

$\Rightarrow x_6 = 2.51kW$

Sensible capacity, SHC

Interpolation Method:

$$\Rightarrow \frac{17^oC - 16^oC}{19^oC - 16^oC} = \frac{y_6 - 2.09kW}{1.75kW - 2.09kW}$$

$\Rightarrow y_6 = 1.98kW$

Power Input, PI

Interpolation Method:

$$\Rightarrow \frac{17^oC - 16^oC}{19^oC - 16^oC} = \frac{z_6 - 0.94kW}{0.96kW - 0.94kW}$$

$\Rightarrow z_6 = 0.95kW$

3rd Step:

To obtain the Total capacity and Sensible capacity for
(a) Indoor Condition: 25°C DB, 17°C WB
Outdoor Condition: 37°C DB

Indoor WB ˚C	Indoor DB ˚C	Outdoor DB, ˚C									
			35			37			40		
			TC (kW)	SHC (kW)	PI (kW)	TC (kW)	SHC (kW)	PI (kW)	TC (kW)	SHC (kW)	PI (kW)
25	**17**	.....	2.62	2.03	0.89	x	y	z	2.51	1.98	0.95

Total capacity, TC

Interpolation Method:

$$\Rightarrow \frac{37^{o}\,C - 35^{o}\,C}{40^{o}\,C - 35^{o}\,C} = \frac{x - 2.62kW}{2.51kW - 2.62kW}$$

$\Rightarrow x = 2.58kW$

Sensible capacity, SHC

Interpolation Method:

$$\Rightarrow \frac{37^{o}\,C - 35^{o}\,C}{40^{o}\,C - 35^{o}\,C} = \frac{y - 2.03kW}{1.98kW - 2.03kW}$$

$\Rightarrow y = 2.01kW$

Power Input, PI

Interpolation Method:

$$\Rightarrow \frac{37^{o}\,C - 35^{o}\,C}{40^{o}\,C - 35^{o}\,C} = \frac{z - 0.89kW}{0.95kW - 0.89kW}$$

$\Rightarrow z = 0.91kW$

Cooling Only (R22)

Model: ACC10C - ALC10C
Cooling Mode

AFR (CFM)	EWB	EDB	Outdoor temperature																	
			19°C			25°C			30°C			35°C			40°C			46°C		
			TC	SHC	PI	TC	SHC	PI	TC	SHC	PI	TC	SHC	PI	TC	SHC	PI	TC	SHC	PI
220	16°C	21°C	2.71	1.66	0.83	2.61	1.62	0.84	2.51	1.58	0.85	2.41	1.53	0.88	2.30	1.49	0.93	2.17	1.43	1.01
		24°C	2.72	2.02	0.83	2.62	1.97	0.84	2.52	1.93	0.85	2.42	1.88	0.88	2.31	1.83	0.93	2.18	1.77	1.01
		27°C	2.75	2.33	0.84	2.66	2.27	0.84	2.57	2.21	0.86	2.48	2.15	0.88	2.39	2.07	0.94	2.28	1.98	1.02
		30°C	2.89	2.50	0.84	2.81	2.43	0.85	2.73	2.36	0.86	2.64	2.28	0.89	2.54	2.20	0.95	2.43	2.10	1.03
	19°C	24°C	2.98	1.66	0.85	2.87	1.61	0.85	2.77	1.57	0.87	2.66	1.53	0.89	2.54	1.49	0.95	2.39	1.43	1.03
		27°C	2.99	2.02	0.85	2.88	1.98	0.85	2.78	1.93	0.87	2.66	1.89	0.89	2.55	1.84	0.95	2.40	1.78	1.03
		30°C	3.00	2.36	0.85	2.90	2.31	0.85	2.79	2.27	0.87	2.69	2.21	0.89	2.58	2.16	0.95	2.44	2.08	1.03
		33°C	3.07	2.63	0.85	2.97	2.57	0.85	2.89	2.49	0.87	2.79	2.42	0.90	2.70	2.34	0.96	2.58	2.23	1.04
	22°C	27°C	3.27	1.64	0.86	3.16	1.60	0.86	3.04	1.56	0.88	2.92	1.52	0.91	2.79	1.48	0.97	2.64	1.43	1.05
		30°C	3.28	2.01	0.86	3.16	1.97	0.86	3.05	1.92	0.88	2.93	1.88	0.91	2.80	1.84	0.97	2.64	1.78	1.05
		33°C	3.29	2.36	0.86	3.17	2.31	0.86	3.06	2.27	0.88	2.93	2.23	0.91	2.81	2.18	0.97	2.66	2.12	1.05
		36°C	3.31	2.68	0.86	3.20	2.63	0.87	3.09	2.58	0.89	2.98	2.52	0.91	2.87	2.45	0.97	2.73	2.36	1.06
260	16°C	21°C	2.78	1.75	0.84	2.68	1.71	0.84	2.58	1.66	0.86	2.47	1.61	0.88	2.36	1.56	0.94	2.22	1.50	1.02
		24°C	2.79	2.13	0.84	2.69	2.08	0.84	2.59	2.03	0.86	2.48	1.98	0.88	2.37	1.93	0.94	2.24	1.86	1.02
		27°C	2.82	2.46	0.84	2.73	2.39	0.84	2.64	2.33	0.86	2.55	2.26	0.89	2.45	2.18	0.94	2.34	2.08	1.02
		30°C	2.97	2.63	0.85	2.88	2.56	0.85	2.79	2.48	0.87	2.70	2.40	0.89	2.61	2.32	0.95	2.49	2.21	1.04
	19°C	24°C	3.06	1.74	0.85	2.95	1.70	0.85	2.84	1.66	0.87	2.72	1.61	0.90	2.60	1.56	0.95	2.45	1.51	1.03
		27°C	3.07	2.13	0.85	2.96	2.08	0.85	2.85	2.03	0.87	2.73	1.99	0.90	2.61	1.94	0.95	2.46	1.88	1.03
		30°C	3.08	2.49	0.85	2.97	2.44	0.85	2.86	2.39	0.87	2.75	2.33	0.90	2.64	2.27	0.96	2.50	2.19	1.04
		33°C	3.15	2.77	0.85	3.05	2.70	0.86	2.96	2.62	0.88	2.86	2.54	0.91	2.77	2.46	0.97	2.64	2.35	1.05
	22°C	27°C	3.36	1.73	0.86	3.24	1.69	0.87	3.12	1.64	0.89	2.99	1.60	0.91	2.86	1.55	0.97	2.70	1.50	1.05
		30°C	3.37	2.12	0.86	3.25	2.07	0.87	3.12	2.03	0.89	3.00	1.98	0.91	2.87	1.93	0.97	2.71	1.87	1.06
		33°C	3.38	2.48	0.86	3.26	2.44	0.87	3.13	2.39	0.89	3.01	2.34	0.91	2.88	2.29	0.97	2.72	2.23	1.06
		36°C	3.40	2.83	0.86	3.28	2.77	0.87	3.17	2.71	0.89	3.05	2.65	0.92	2.94	2.58	0.98	2.80	2.48	1.06
300	16°C	21°C	2.83	1.82	0.84	2.73	1.77	0.84	2.62	1.72	0.86	2.51	1.67	0.88	2.40	1.62	0.94	2.26	1.56	1.02
		24°C	2.84	2.20	0.84	2.74	2.15	0.84	2.63	2.10	0.86	2.52	2.05	0.88	2.41	2.00	0.94	2.28	1.93	1.02
		27°C	2.88	2.55	0.84	2.78	2.48	0.85	2.69	2.41	0.86	2.59	2.34	0.89	2.50	2.26	0.95	2.38	2.15	1.03
		30°C	3.02	2.73	0.85	2.93	2.65	0.85	2.84	2.57	0.87	2.75	2.49	0.90	2.65	2.40	0.96	2.53	2.29	1.04
	19°C	24°C	3.11	1.81	0.85	3.00	1.76	0.86	2.89	1.72	0.87	2.77	1.67	0.90	2.65	1.62	0.96	2.50	1.56	1.04
		27°C	3.12	2.21	0.85	3.01	2.16	0.86	2.90	2.11	0.88	2.78	2.06	0.90	2.66	2.00	0.96	2.51	1.94	1.04
		30°C	3.14	2.58	0.85	3.03	2.53	0.86	2.92	2.47	0.88	2.80	2.41	0.90	2.69	2.35	0.96	2.55	2.26	1.04
		33°C	3.20	2.88	0.86	3.10	2.80	0.86	3.01	2.72	0.88	2.91	2.63	0.91	2.81	2.54	0.97	2.69	2.43	1.05
	22°C	27°C	3.42	1.79	0.87	3.30	1.75	0.87	3.17	1.70	0.89	3.05	1.66	0.92	2.91	1.61	0.98	2.75	1.55	1.06
		30°C	3.43	2.20	0.87	3.30	2.15	0.87	3.18	2.10	0.89	3.05	2.05	0.92	2.92	2.00	0.98	2.76	1.94	1.06
		33°C	3.44	2.58	0.87	3.31	2.53	0.87	3.19	2.48	0.89	3.06	2.43	0.92	2.93	2.37	0.98	2.77	2.31	1.06
		36°C	3.46	2.93	0.87	3.34	2.87	0.87	3.22	2.81	0.89	3.11	2.75	0.92	2.99	2.67	0.98	2.85	2.57	1.07

Model: ACC15C - ALC15C
Cooling Mode

AFR (CFM)	EWB	EDB	Outdoor temperature																	
			19°C			25°C			30°C			35°C			40°C			46°C		
			TC	SHC	PI	TC	SHC	PI	TC	SHC	PI	TC	SHC	PI	TC	SHC	PI	TC	SHC	PI
360	16°C	21°C	3.51	2.12	1.17	3.38	2.07	1.18	3.25	2.01	1.20	3.12	1.96	1.23	2.98	1.90	1.31	2.81	1.83	1.42
		24°C	3.52	2.58	1.18	3.39	2.52	1.18	3.27	2.46	1.20	3.13	2.40	1.23	3.00	2.34	1.31	2.82	2.26	1.42
		27°C	3.56	2.98	1.18	3.45	2.90	1.18	3.33	2.83	1.21	3.22	2.74	1.24	3.10	2.65	1.32	2.95	2.52	1.44
		30°C	3.75	3.19	1.18	3.64	3.10	1.19	3.53	3.01	1.22	3.41	2.91	1.25	3.29	2.81	1.34	3.14	2.69	1.45
	19°C	24°C	3.86	2.11	1.19	3.72	2.06	1.20	3.58	2.01	1.22	3.44	1.96	1.25	3.29	1.90	1.34	3.10	1.83	1.45
		27°C	3.87	2.58	1.19	3.73	2.52	1.20	3.59	2.47	1.22	3.45	2.41	1.26	3.30	2.35	1.34	3.11	2.28	1.45
		30°C	3.89	3.02	1.19	3.75	2.96	1.20	3.62	2.89	1.22	3.48	2.83	1.26	3.34	2.76	1.34	3.16	2.66	1.45
		33°C	3.97	3.36	1.19	3.85	3.28	1.20	3.74	3.18	1.23	3.62	3.09	1.27	3.49	2.98	1.35	3.34	2.85	1.47
	22°C	27°C	4.24	2.09	1.21	4.09	2.04	1.22	3.94	1.99	1.24	3.78	1.94	1.28	3.62	1.89	1.36	3.42	1.82	1.48
		30°C	4.25	2.57	1.21	4.10	2.51	1.22	3.95	2.46	1.24	3.79	2.40	1.28	3.63	2.35	1.36	3.42	2.28	1.48
		33°C	4.26	3.01	1.21	4.11	2.96	1.22	3.96	2.90	1.24	3.80	2.85	1.28	3.64	2.79	1.36	3.44	2.71	1.48
		36°C	4.29	3.43	1.21	4.14	3.36	1.22	4.00	3.29	1.25	3.86	3.22	1.29	3.71	3.13	1.37	3.54	3.02	1.49
440	16°C	21°C	3.60	2.24	1.18	3.47	2.18	1.18	3.34	2.12	1.21	3.20	2.06	1.24	3.06	2.00	1.32	2.88	1.92	1.43
		24°C	3.62	2.71	1.18	3.48	2.65	1.18	3.35	2.59	1.21	3.21	2.53	1.24	3.07	2.46	1.32	2.90	2.38	1.43
		27°C	3.66	3.14	1.18	3.54	3.06	1.19	3.42	2.97	1.21	3.30	2.88	1.25	3.18	2.78	1.33	3.03	2.65	1.44
		30°C	3.85	3.36	1.19	3.73	3.27	1.20	3.62	3.17	1.22	3.50	3.06	1.26	3.38	2.96	1.34	3.22	2.82	1.46
	19°C	24°C	3.96	2.23	1.20	3.82	2.17	1.20	3.67	2.12	1.23	3.53	2.06	1.26	3.37	2.00	1.34	3.18	1.92	1.46
		27°C	3.97	2.72	1.20	3.83	2.66	1.20	3.69	2.60	1.23	3.54	2.54	1.26	3.38	2.47	1.34	3.19	2.40	1.46
		30°C	3.99	3.18	1.20	3.85	3.11	1.20	3.71	3.05	1.23	3.57	2.97	1.26	3.42	2.90	1.35	3.24	2.80	1.46
		33°C	4.07	3.54	1.20	3.95	3.45	1.21	3.83	3.35	1.24	3.71	3.25	1.27	3.58	3.14	1.36	3.42	3.00	1.48
	22°C	27°C	4.35	2.21	1.21	4.19	2.15	1.22	4.04	2.10	1.25	3.87	2.04	1.29	3.71	1.98	1.37	3.50	1.91	1.48
		30°C	4.36	2.71	1.21	4.20	2.65	1.22	4.05	2.59	1.25	3.88	2.53	1.29	3.72	2.47	1.37	3.51	2.39	1.49
		33°C	4.37	3.17	1.21	4.22	3.11	1.22	4.06	3.05	1.25	3.90	2.99	1.29	3.73	2.93	1.37	3.53	2.85	1.49
		36°C	4.40	3.61	1.22	4.25	3.54	1.22	4.10	3.47	1.25	3.95	3.39	1.29	3.81	3.30	1.38	3.63	3.17	1.50
510	16°C	21°C	3.66	2.32	1.18	3.53	2.26	1.19	3.39	2.20	1.21	3.25	2.14	1.24	3.11	2.07	1.32	2.93	1.99	1.44
		24°C	3.68	2.82	1.19	3.54	2.75	1.19	3.41	2.69	1.21	3.27	2.62	1.25	3.13	2.55	1.32	2.95	2.46	1.44
		27°C	3.72	3.25	1.19	3.60	3.17	1.19	3.48	3.08	1.22	3.36	2.99	1.25	3.23	2.88	1.33	3.08	2.74	1.45
		30°C	3.91	3.49	1.20	3.80	3.39	1.20	3.68	3.28	1.23	3.56	3.18	1.26	3.44	3.06	1.35	3.28	2.92	1.46
	19°C	24°C	4.03	2.31	1.20	3.89	2.25	1.21	3.74	2.19	1.23	3.59	2.13	1.27	3.43	2.07	1.35	3.23	1.99	1.46
		27°C	4.05	2.82	1.20	3.90	2.76	1.21	3.75	2.69	1.23	3.60	2.63	1.27	3.44	2.56	1.35	3.25	2.48	1.46
		30°C	4.06	3.30	1.20	3.92	3.23	1.21	3.78	3.16	1.23	3.63	3.08	1.27	3.48	3.00	1.35	3.30	2.89	1.47
		33°C	4.15	3.68	1.21	4.02	3.58	1.21	3.90	3.48	1.24	3.77	3.36	1.28	3.64	3.25	1.36	3.48	3.10	1.48
	22°C	27°C	4.43	2.29	1.22	4.27	2.23	1.23	4.11	2.17	1.25	3.94	2.12	1.29	3.77	2.05	1.37	3.56	1.98	1.49
		30°C	4.44	2.81	1.22	4.28	2.75	1.23	4.12	2.68	1.26	3.95	2.62	1.29	3.78	2.56	1.37	3.57	2.48	1.49
		33°C	4.45	3.29	1.22	4.29	3.23	1.23	4.13	3.17	1.26	3.97	3.10	1.29	3.80	3.03	1.38	3.59	2.95	1.49
		36°C	4.48	3.75	1.22	4.32	3.67	1.23	4.17	3.59	1.26	4.02	3.51	1.30	3.87	3.41	1.38	3.69	3.28	1.50

Remark:
AFR: Air flow rate (CFM)
EWB: Entering Wet Bulb Temp. (˚C)
EDB: Entering Dry Bulb Temp. (˚C)
TC: Total Cooling Capacity (kW)
SHC: Sensible Heat Capacity (kW)
PI: Power Input

Notes:
1. Ratings shown are gross capacities which do not include a deduction for indoor fan motor heat.
2. shows nominal capacities.
3. Direct interpolation is permissible. Do not extrapolate.

Model: ACC20C - ALC18C
Cooling Mode

AFR (CFM)	EWB	EDB	Outdoor temperature																	
			19°C			25°C			30°C			35°C			40°C			46°C		
			TC	SHC	PI	TC	SHC	PI	TC	SHC	PI	TC	SHC	PI	TC	SHC	PI	TC	SHC	PI
590	16°C	21°C	5.15	3.11	1.77	4.96	3.03	1.78	4.77	2.95	1.81	4.57	2.87	1.86	4.37	2.79	1.98	4.12	2.68	2.14
		24°C	5.17	3.78	1.77	4.98	3.69	1.78	4.79	3.61	1.81	4.60	3.53	1.86	4.39	3.44	1.98	4.14	3.32	2.15
		27°C	5.23	4.37	1.77	5.06	4.26	1.78	4.89	4.14	1.82	4.72	4.02	1.87	4.54	3.88	1.99	4.33	3.70	2.16
		30°C	5.50	4.68	1.79	5.34	4.55	1.80	5.18	4.41	1.84	5.01	4.27	1.89	4.83	4.13	2.01	4.61	3.94	2.19
	19°C	24°C	5.66	3.10	1.79	5.46	3.02	1.80	5.25	2.95	1.84	5.04	2.87	1.89	4.82	2.79	2.01	4.55	2.69	2.18
		27°C	5.68	3.78	1.79	5.48	3.70	1.80	5.27	3.62	1.84	5.06	3.54	1.89	4.84	3.45	2.01	4.56	3.34	2.19
		30°C	5.71	4.42	1.80	5.50	4.34	1.80	5.31	4.25	1.84	5.10	4.15	1.90	4.89	4.04	2.02	4.64	3.90	2.19
		33°C	5.82	4.93	1.80	5.65	4.81	1.81	5.48	4.67	1.86	5.31	4.53	1.91	5.12	4.38	2.04	4.89	4.19	2.22
	22°C	27°C	6.21	3.07	1.82	5.99	3.00	1.83	5.77	2.92	1.87	5.54	2.85	1.93	5.30	2.77	2.05	5.01	2.67	2.23
		30°C	6.23	3.77	1.82	6.01	3.69	1.83	5.79	3.61	1.88	5.56	3.53	1.93	5.32	3.44	2.05	5.02	3.34	2.23
		33°C	6.25	4.42	1.82	6.03	4.34	1.83	5.80	4.26	1.88	5.57	4.17	1.93	5.34	4.09	2.06	5.05	3.97	2.23
		36°C	6.29	5.03	1.82	6.08	4.93	1.84	5.87	4.83	1.88	5.66	4.72	1.94	5.44	4.60	2.07	5.19	4.43	2.25
640	16°C	21°C	5.28	3.28	1.78	5.09	3.19	1.78	4.89	3.11	1.82	4.69	3.02	1.87	4.48	2.93	1.99	4.22	2.82	2.16
		24°C	5.30	3.98	1.78	5.11	3.89	1.79	4.91	3.80	1.82	4.71	3.71	1.87	4.50	3.61	1.99	4.25	3.49	2.16
		27°C	5.36	4.60	1.78	5.19	4.48	1.79	5.01	4.36	1.83	4.84	4.23	1.88	4.66	4.08	2.00	4.44	3.89	2.17
		30°C	5.64	4.93	1.80	5.48	4.79	1.80	5.31	4.65	1.85	5.13	4.50	1.90	4.95	4.34	2.02	4.73	4.14	2.20
	19°C	24°C	5.81	3.27	1.80	5.60	3.18	1.81	5.39	3.10	1.85	5.17	3.02	1.90	4.94	2.93	2.02	4.66	2.82	2.19
		27°C	5.83	3.99	1.80	5.62	3.90	1.81	5.41	3.81	1.85	5.19	3.72	1.90	4.96	3.63	2.03	4.68	3.51	2.20
		30°C	5.86	4.66	1.80	5.64	4.57	1.81	5.44	4.47	1.85	5.23	4.36	1.91	5.02	4.25	2.03	4.76	4.10	2.20
		33°C	5.97	5.20	1.81	5.79	5.06	1.82	5.62	4.92	1.86	5.44	4.76	1.92	5.25	4.60	2.05	5.02	4.40	2.23
	22°C	27°C	6.38	3.24	1.83	6.15	3.16	1.84	5.92	3.08	1.88	5.68	2.99	1.94	5.44	2.91	2.06	5.14	2.81	2.24
		30°C	6.39	3.97	1.83	6.16	3.88	1.84	5.93	3.80	1.89	5.70	3.71	1.94	5.45	3.62	2.07	5.15	3.51	2.24
		33°C	6.41	4.65	1.83	6.18	4.57	1.84	5.95	4.48	1.89	5.71	4.39	1.94	5.47	4.30	2.07	5.18	4.18	2.24
		36°C	6.45	5.30	1.83	6.23	5.19	1.85	6.02	5.09	1.89	5.80	4.97	1.95	5.58	4.83	2.08	5.32	4.65	2.26
670	16°C	21°C	5.37	3.40	1.79	5.18	3.31	1.79	4.98	3.22	1.83	4.77	3.13	1.88	4.56	3.04	1.99	4.29	2.91	2.16
		24°C	5.40	4.13	1.79	5.20	4.04	1.79	5.00	3.94	1.83	4.80	3.84	1.88	4.58	3.74	2.00	4.32	3.61	2.17
		27°C	5.46	4.77	1.79	5.28	4.65	1.80	5.10	4.52	1.83	4.92	4.38	1.89	4.74	4.23	2.01	4.52	4.03	2.18
		30°C	5.74	5.12	1.80	5.57	4.97	1.81	5.40	4.82	1.85	5.23	4.66	1.91	5.04	4.49	2.03	4.81	4.29	2.21
	19°C	24°C	5.91	3.39	1.81	5.70	3.30	1.82	5.48	3.22	1.86	5.26	3.13	1.91	5.03	3.03	2.03	4.74	2.92	2.20
		27°C	5.93	4.14	1.81	5.72	4.04	1.82	5.50	3.95	1.86	5.28	3.85	1.91	5.05	3.76	2.03	4.76	3.64	2.20
		30°C	5.96	4.84	1.81	5.75	4.74	1.82	5.54	4.63	1.86	5.32	4.52	1.91	5.11	4.40	2.04	4.84	4.24	2.21
		33°C	6.08	5.39	1.82	5.90	5.25	1.83	5.72	5.10	1.87	5.54	4.93	1.93	5.35	4.76	2.06	5.11	4.55	2.24
	22°C	27°C	6.49	3.36	1.84	6.26	3.27	1.85	6.02	3.19	1.89	5.78	3.10	1.95	5.54	3.01	2.07	5.23	2.90	2.25
		30°C	6.51	4.12	1.84	6.27	4.03	1.85	6.04	3.94	1.89	5.80	3.84	1.95	5.55	3.75	2.07	5.24	3.63	2.25
		33°C	6.53	4.83	1.84	6.29	4.74	1.85	6.06	4.64	1.89	5.82	4.55	1.95	5.57	4.45	2.07	5.27	4.32	2.25
		36°C	6.57	5.50	1.84	6.34	5.39	1.85	6.12	5.27	1.90	5.90	5.15	1.95	5.68	5.00	2.08	5.41	4.81	2.26

Model: ACC20C - ALC20C
Cooling Mode

AFR (CFM)	EWB	EDB	Outdoor temperature																	
			19°C			25°C			30°C			35°C			40°C			46°C		
			TC	SHC	PI	TC	SHC	PI	TC	SHC	PI	TC	SHC	PI	TC	SHC	PI	TC	SHC	PI
590	16°C	21°C	5.43	3.28	1.76	5.23	3.20	1.76	5.03	3.12	1.80	4.83	3.03	1.84	4.61	2.94	1.96	4.34	2.83	2.13
		24°C	5.45	3.99	1.76	5.25	3.90	1.76	5.05	3.81	1.80	4.85	3.72	1.85	4.64	3.63	1.96	4.37	3.50	2.13
		27°C	5.52	4.61	1.76	5.34	4.49	1.77	5.16	4.37	1.80	4.98	4.24	1.85	4.79	4.09	1.98	4.57	3.91	2.15
		30°C	5.80	4.94	1.77	5.63	4.80	1.78	5.46	4.66	1.82	5.28	4.51	1.87	5.10	4.35	2.00	4.86	4.16	2.17
	19°C	24°C	5.97	3.27	1.78	5.76	3.19	1.79	5.54	3.11	1.83	5.32	3.03	1.88	5.09	2.94	2.00	4.80	2.83	2.17
		27°C	5.99	3.99	1.78	5.78	3.90	1.79	5.56	3.82	1.83	5.34	3.73	1.88	5.10	3.64	2.00	4.81	3.53	2.17
		30°C	6.02	4.67	1.78	5.81	4.57	1.79	5.60	4.48	1.83	5.38	4.37	1.88	5.16	4.26	2.00	4.89	4.12	2.17
		33°C	6.14	5.20	1.79	5.96	5.07	1.80	5.78	4.93	1.84	5.60	4.77	1.90	5.40	4.62	2.02	5.16	4.42	2.20
	22°C	27°C	6.56	3.24	1.81	6.32	3.16	1.82	6.09	3.08	1.86	5.85	3.00	1.91	5.60	2.92	2.04	5.28	2.82	2.21
		30°C	6.57	3.97	1.81	6.34	3.89	1.82	6.10	3.80	1.86	5.86	3.72	1.91	5.61	3.63	2.04	5.30	3.52	2.21
		33°C	6.59	4.66	1.81	6.36	4.57	1.82	6.12	4.49	1.86	5.88	4.40	1.92	5.63	4.31	2.04	5.33	4.19	2.21
		36°C	6.63	5.30	1.81	6.41	5.20	1.82	6.19	5.10	1.87	5.97	4.98	1.92	5.74	4.85	2.05	5.48	4.67	2.23
640	16°C	21°C	5.57	3.46	1.77	5.37	3.37	1.77	5.16	3.28	1.81	4.95	3.19	1.85	4.73	3.09	1.97	4.45	2.97	2.14
		24°C	5.59	4.20	1.77	5.39	4.10	1.77	5.18	4.01	1.81	4.97	3.91	1.86	4.75	3.81	1.97	4.48	3.68	2.14
		27°C	5.66	4.85	1.77	5.47	4.73	1.78	5.29	4.60	1.81	5.10	4.46	1.86	4.91	4.31	1.99	4.68	4.10	2.16
		30°C	5.95	5.20	1.78	5.78	5.05	1.79	5.60	4.90	1.83	5.42	4.74	1.88	5.22	4.58	2.01	4.98	4.37	2.18
	19°C	24°C	6.13	3.45	1.79	5.91	3.36	1.80	5.68	3.27	1.84	5.45	3.18	1.89	5.21	3.09	2.01	4.92	2.98	2.18
		27°C	6.15	4.21	1.79	5.93	4.11	1.80	5.70	4.02	1.84	5.47	3.92	1.89	5.23	3.83	2.01	4.94	3.71	2.18
		30°C	6.18	4.92	1.79	5.95	4.82	1.80	5.74	4.71	1.84	5.52	4.60	1.89	5.29	4.48	2.01	5.02	4.33	2.19
		33°C	6.30	5.48	1.80	6.11	5.34	1.81	5.93	5.19	1.85	5.74	5.02	1.91	5.54	4.85	2.03	5.29	4.64	2.21
	22°C	27°C	6.73	3.41	1.82	6.49	3.33	1.83	6.24	3.25	1.87	6.00	3.16	1.92	5.74	3.07	2.05	5.42	2.96	2.22
		30°C	6.74	4.19	1.82	6.50	4.10	1.83	6.26	4.01	1.87	6.01	3.91	1.92	5.75	3.82	2.05	5.43	3.70	2.22
		33°C	6.76	4.91	1.82	6.52	4.82	1.83	6.28	4.73	1.87	6.03	4.63	1.93	5.77	4.53	2.05	5.46	4.40	2.22
		36°C	6.81	5.59	1.82	6.57	5.48	1.83	6.35	5.37	1.88	6.12	5.24	1.93	5.89	5.10	2.06	5.61	4.91	2.24
670	16°C	21°C	5.67	3.59	1.77	5.46	3.50	1.78	5.25	3.40	1.81	5.04	3.30	1.86	4.81	3.20	1.98	4.53	3.07	2.15
		24°C	5.69	4.36	1.77	5.48	4.26	1.78	5.27	4.16	1.81	5.06	4.06	1.86	4.84	3.95	1.98	4.56	3.81	2.15
		27°C	5.76	5.03	1.78	5.57	4.91	1.78	5.38	4.77	1.82	5.19	4.62	1.87	5.00	4.46	1.99	4.76	4.25	2.17
		30°C	6.06	5.40	1.79	5.88	5.24	1.80	5.70	5.08	1.84	5.51	4.91	1.89	5.32	4.74	2.02	5.07	4.52	2.19
	19°C	24°C	6.24	3.58	1.80	6.01	3.48	1.80	5.79	3.39	1.84	5.55	3.30	1.89	5.31	3.20	2.01	5.00	3.08	2.18
		27°C	6.26	4.36	1.80	6.03	4.26	1.80	5.81	4.17	1.84	5.57	4.07	1.90	5.33	3.96	2.02	5.02	3.84	2.19
		30°C	6.29	5.10	1.80	6.06	5.00	1.81	5.84	4.89	1.85	5.62	4.77	1.90	5.39	4.64	2.02	5.11	4.48	2.19
		33°C	6.42	5.69	1.80	6.22	5.54	1.81	6.03	5.38	1.86	5.84	5.21	1.91	5.64	5.03	2.04	5.39	4.80	2.22
	22°C	27°C	6.85	3.54	1.82	6.60	3.45	1.83	6.36	3.36	1.88	6.10	3.27	1.93	5.84	3.18	2.05	5.51	3.06	2.23
		30°C	6.87	4.34	1.82	6.62	4.25	1.83	6.37	4.15	1.88	6.12	4.05	1.93	5.85	3.95	2.06	5.53	3.83	2.23
		33°C	6.89	5.09	1.82	6.64	5.00	1.84	6.39	4.90	1.88	6.13	4.80	1.93	5.88	4.69	2.06	5.56	4.56	2.23
		36°C	6.93	5.80	1.83	6.69	5.68	1.84	6.46	5.56	1.88	6.23	5.43	1.94	5.99	5.28	2.07	5.71	5.08	2.25

Remark:
AFR: Air flow rate (CFM)
EWB: Entering Wet Bulb Temp. (˚C)
EDB: Entering Dry Bulb Temp. (˚C)
TC: Total Cooling Capacity (kW)
SHC: Sensible Heat Capacity (kW)
PI: Power Input

Notes:
1. Ratings shown are gross capacities which do not include a deduction for indoor fan motor heat.
2. shows nominal capacities.
3. Direct interpolation is permissible. Do not extrapolate.

Model: ACC25C - ALC25C
Cooling Mode

AFR (CFM)	EWB	EDB	Outdoor temperature																	
			19°C			25°C			30°C			35°C			40°C			46°C		
			TC	SHC	PI	TC	SHC	PI	TC	SHC	PI	TC	SHC	PI	TC	SHC	PI	TC	SHC	PI
610	16°C	21°C	6.71	3.95	2.43	6.47	3.85	2.43	6.23	3.75	2.48	5.97	3.65	2.55	5.70	3.54	2.71	5.37	3.40	2.94
		24°C	6.74	4.80	2.43	6.50	4.69	2.43	6.25	4.58	2.48	6.00	4.48	2.55	5.73	4.36	2.71	5.41	4.21	2.94
		27°C	6.82	5.54	2.43	6.60	5.40	2.44	6.38	5.26	2.49	6.15	5.10	2.56	5.93	4.93	2.73	5.65	4.70	2.96
		30°C	7.17	5.94	2.45	6.97	5.77	2.46	6.75	5.60	2.51	6.53	5.42	2.59	6.30	5.24	2.76	6.01	5.00	3.00
	19°C	24°C	7.39	3.94	2.46	7.12	3.84	2.47	6.86	3.74	2.52	6.58	3.64	2.59	6.29	3.54	2.76	5.93	3.41	2.99
		27°C	7.41	4.80	2.46	7.15	4.70	2.47	6.88	4.59	2.52	6.60	4.49	2.59	6.31	4.38	2.76	5.96	4.24	2.99
		30°C	7.45	5.61	2.46	7.18	5.50	2.47	6.92	5.39	2.52	6.66	5.26	2.60	6.39	5.13	2.76	6.05	4.95	3.00
		33°C	7.60	6.26	2.47	7.37	6.10	2.48	7.15	5.93	2.54	6.92	5.74	2.62	6.68	5.55	2.79	6.39	5.31	3.04
	22°C	27°C	8.11	3.90	2.49	7.82	3.81	2.51	7.53	3.71	2.57	7.23	3.61	2.64	6.92	3.51	2.81	6.54	3.39	3.05
		30°C	8.13	4.78	2.49	7.84	4.68	2.51	7.55	4.58	2.57	7.25	4.47	2.64	6.94	4.37	2.81	6.55	4.24	3.05
		33°C	8.15	5.61	2.50	7.86	5.50	2.51	7.57	5.40	2.57	7.27	5.30	2.65	6.97	5.19	2.82	6.59	5.04	3.06
		36°C	8.21	6.38	2.50	7.93	6.26	2.52	7.66	6.13	2.58	7.38	5.99	2.65	7.10	5.83	2.83	6.77	5.62	3.08
760	16°C	21°C	6.89	4.16	2.44	6.64	4.05	2.44	6.38	3.95	2.49	6.12	3.84	2.56	5.85	3.72	2.72	5.51	3.57	2.95
		24°C	6.92	5.05	2.44	6.66	4.94	2.45	6.41	4.83	2.49	6.15	4.71	2.56	5.88	4.59	2.73	5.54	4.43	2.96
		27°C	7.00	5.84	2.44	6.77	5.69	2.45	6.54	5.54	2.50	6.31	5.37	2.57	6.08	5.18	2.74	5.79	4.94	2.98
		30°C	7.36	6.26	2.46	7.15	6.08	2.47	6.93	5.90	2.53	6.70	5.71	2.60	6.46	5.51	2.77	6.17	5.26	3.01
	19°C	24°C	7.58	4.15	2.47	7.31	4.04	2.48	7.03	3.94	2.53	6.75	3.83	2.60	6.45	3.72	2.77	6.08	3.58	3.01
		27°C	7.61	5.06	2.47	7.33	4.95	2.48	7.05	4.84	2.54	6.77	4.72	2.61	6.47	4.60	2.77	6.11	4.46	3.01
		30°C	7.64	5.92	2.47	7.37	5.79	2.48	7.10	5.67	2.54	6.83	5.54	2.61	6.55	5.40	2.78	6.21	5.20	3.02
		33°C	7.80	6.60	2.48	7.56	6.43	2.50	7.33	6.24	2.55	7.10	6.04	2.63	6.85	5.84	2.81	6.55	5.58	3.05
	22°C	27°C	8.32	4.11	2.51	8.02	4.01	2.52	7.72	3.91	2.58	7.42	3.80	2.66	7.10	3.69	2.83	6.70	3.56	3.07
		30°C	8.34	5.04	2.51	8.04	4.93	2.52	7.74	4.82	2.58	7.43	4.71	2.66	7.11	4.59	2.83	6.72	4.45	3.07
		33°C	8.37	5.91	2.51	8.07	5.80	2.53	7.77	5.69	2.58	7.46	5.57	2.66	7.14	5.45	2.83	6.75	5.30	3.07
		36°C	8.42	6.72	2.51	8.13	6.59	2.53	7.85	6.46	2.59	7.57	6.30	2.67	7.28	6.13	2.84	6.94	5.90	3.09
810	16°C	21°C	7.01	4.32	2.45	6.76	4.21	2.45	6.50	4.09	2.50	6.23	3.98	2.57	5.95	3.85	2.73	5.60	3.70	2.96
		24°C	7.04	5.24	2.45	6.78	5.12	2.45	6.52	5.00	2.50	6.26	4.88	2.57	5.98	4.75	2.73	5.64	4.58	2.97
		27°C	7.13	6.06	2.45	6.89	5.90	2.46	6.66	5.74	2.51	6.42	5.56	2.58	6.19	5.36	2.75	5.89	5.11	2.99
		30°C	7.49	6.49	2.47	7.27	6.30	2.48	7.05	6.11	2.54	6.82	5.91	2.61	6.58	5.70	2.78	6.27	5.44	3.02
	19°C	24°C	7.72	4.30	2.48	7.44	4.19	2.49	7.16	4.08	2.54	6.87	3.97	2.61	6.57	3.85	2.78	6.19	3.71	3.02
		27°C	7.74	5.25	2.48	7.46	5.13	2.49	7.18	5.01	2.54	6.89	4.89	2.62	6.59	4.77	2.78	6.21	4.61	3.02
		30°C	7.78	6.14	2.48	7.50	6.01	2.49	7.23	5.88	2.55	6.95	5.74	2.62	6.66	5.59	2.79	6.31	5.39	3.03
		33°C	7.94	6.84	2.49	7.70	6.66	2.50	7.46	6.47	2.56	7.22	6.26	2.64	6.98	6.05	2.82	6.66	5.78	3.06
	22°C	27°C	8.47	4.26	2.51	8.17	4.16	2.53	7.86	4.05	2.59	7.55	3.94	2.66	7.22	3.82	2.84	6.82	3.69	3.08
		30°C	8.49	5.23	2.52	8.19	5.11	2.53	7.88	4.99	2.59	7.57	4.88	2.67	7.24	4.76	2.84	6.84	4.61	3.08
		33°C	8.52	6.13	2.52	8.21	6.01	2.53	7.90	5.89	2.59	7.59	5.77	2.67	7.27	5.65	2.84	6.87	5.48	3.08
		36°C	8.57	6.97	2.52	8.28	6.83	2.54	7.99	6.69	2.60	7.70	6.53	2.68	7.41	6.35	2.85	7.07	6.11	3.10

Model: ACC28C - ALC28C
Cooling Mode

AFR (CFM)	EWB	EDB	Outdoor temperature																	
			19°C			25°C			30°C			35°C			40°C			46°C		
			TC	SHC	PI	TC	SHC	PI	TC	SHC	PI	TC	SHC	PI	TC	SHC	PI	TC	SHC	PI
710	16°C	21°C	7.71	4.41	2.73	7.43	4.30	2.73	7.15	4.19	2.79	6.86	4.07	2.86	6.55	3.95	3.05	6.17	3.80	3.30
		24°C	7.74	5.35	2.73	7.46	5.23	2.74	7.18	5.12	2.79	6.89	4.99	2.87	6.59	4.87	3.05	6.21	4.70	3.31
		27°C	7.84	6.18	2.73	7.58	6.03	2.74	7.33	5.87	2.80	7.07	5.69	2.88	6.81	5.50	3.07	6.49	5.25	3.33
		30°C	8.24	6.63	2.75	8.00	6.44	2.77	7.76	6.25	2.83	7.51	6.05	2.91	7.24	5.85	3.10	6.91	5.59	3.37
	19°C	24°C	8.49	4.39	2.76	8.18	4.28	2.78	7.88	4.17	2.83	7.56	4.06	2.91	7.23	3.95	3.10	6.81	3.80	3.36
		27°C	8.51	5.36	2.76	8.21	5.24	2.78	7.90	5.13	2.84	7.58	5.01	2.92	7.25	4.89	3.10	6.84	4.74	3.37
		30°C	8.55	6.27	2.77	8.25	6.14	2.78	7.95	6.01	2.84	7.65	5.87	2.92	7.33	5.73	3.11	6.95	5.53	3.38
		33°C	8.73	6.99	2.77	8.47	6.81	2.79	8.21	6.62	2.86	7.95	6.41	2.94	7.68	6.20	3.14	7.34	5.93	3.41
	22°C	27°C	9.31	4.35	2.80	8.98	4.25	2.82	8.65	4.14	2.89	8.31	4.03	2.97	7.95	3.92	3.16	7.51	3.78	3.43
		30°C	9.34	5.34	2.80	9.01	5.22	2.82	8.67	5.11	2.89	8.33	4.99	2.97	7.97	4.88	3.16	7.53	4.73	3.43
		33°C	9.36	6.26	2.81	9.03	6.14	2.83	8.70	6.03	2.89	8.35	5.91	2.98	8.00	5.79	3.17	7.57	5.63	3.44
		36°C	9.43	7.12	2.81	9.11	6.98	2.83	8.79	6.84	2.90	8.48	6.69	2.98	8.16	6.51	3.18	7.78	6.27	3.46
770	16°C	21°C	7.91	4.65	2.74	7.62	4.53	2.75	7.33	4.41	2.80	7.03	4.28	2.88	6.72	4.15	3.06	6.32	3.99	3.32
		24°C	7.95	5.64	2.74	7.65	5.51	2.75	7.36	5.39	2.81	7.06	5.26	2.88	6.75	5.12	3.06	6.37	4.94	3.32
		27°C	8.04	6.52	2.75	7.78	6.35	2.76	7.51	6.18	2.81	7.25	5.99	2.89	6.98	5.78	3.08	6.65	5.51	3.35
		30°C	8.45	6.99	2.77	8.21	6.78	2.78	7.95	6.58	2.84	7.70	6.37	2.93	7.42	6.15	3.12	7.08	5.87	3.39
	19°C	24°C	8.71	4.63	2.78	8.39	4.51	2.79	8.08	4.39	2.85	7.75	4.27	2.93	7.41	4.15	3.12	6.99	4.00	3.38
		27°C	8.74	5.65	2.78	8.42	5.52	2.79	8.10	5.40	2.85	7.78	5.27	2.93	7.43	5.14	3.12	7.01	4.98	3.38
		30°C	8.77	6.60	2.78	8.46	6.47	2.79	8.15	6.33	2.85	7.84	6.18	2.94	7.52	6.02	3.13	7.13	5.81	3.39
		33°C	8.95	7.36	2.79	8.68	7.17	2.81	8.42	6.97	2.87	8.15	6.75	2.96	7.87	6.52	3.16	7.52	6.23	3.43
	22°C	27°C	9.56	4.58	2.82	9.22	4.47	2.84	8.87	4.36	2.90	8.52	4.24	2.99	8.15	4.12	3.18	7.70	3.97	3.45
		30°C	9.58	5.62	2.82	9.24	5.50	2.84	8.89	5.38	2.90	8.54	5.25	2.99	8.17	5.13	3.18	7.72	4.97	3.45
		33°C	9.61	6.59	2.82	9.27	6.47	2.84	8.92	6.35	2.91	8.56	6.22	2.99	8.20	6.09	3.18	7.76	5.91	3.45
		36°C	9.67	7.50	2.82	9.34	7.36	2.84	9.02	7.20	2.91	8.69	7.04	3.00	8.36	6.85	3.20	7.97	6.59	3.48
810	16°C	21°C	8.05	4.82	2.75	7.76	4.69	2.76	7.46	4.57	2.81	7.15	4.44	2.89	6.83	4.30	3.07	6.43	4.13	3.33
		24°C	8.09	5.85	2.75	7.79	5.72	2.76	7.49	5.58	2.82	7.19	5.45	2.89	6.87	5.30	3.08	6.48	5.11	3.34
		27°C	8.18	6.76	2.76	7.91	6.59	2.77	7.65	6.41	2.82	7.38	6.21	2.90	7.10	5.99	3.09	6.77	5.70	3.36
		30°C	8.60	7.25	2.78	8.35	7.04	2.79	8.10	6.82	2.85	7.83	6.60	2.94	7.55	6.37	3.13	7.21	6.07	3.40
	19°C	24°C	8.86	4.80	2.79	8.54	4.68	2.80	8.22	4.56	2.86	7.89	4.43	2.94	7.54	4.30	3.13	7.11	4.14	3.39
		27°C	8.89	5.86	2.79	8.57	5.73	2.80	8.25	5.59	2.86	7.91	5.46	2.94	7.57	5.32	3.13	7.14	5.15	3.40
		30°C	8.93	6.85	2.79	8.61	6.71	2.80	8.30	6.56	2.87	7.98	6.40	2.95	7.65	6.24	3.14	7.25	6.01	3.41
		33°C	9.11	7.64	2.80	8.84	7.44	2.82	8.57	7.22	2.88	8.30	6.99	2.97	8.01	6.75	3.17	7.65	6.45	3.44
	22°C	27°C	9.73	4.76	2.83	9.38	4.64	2.85	9.03	4.52	2.91	8.67	4.40	3.00	8.30	4.27	3.19	7.83	4.11	3.46
		30°C	9.75	5.83	2.83	9.40	5.70	2.85	9.05	5.58	2.91	8.69	5.44	3.00	8.32	5.31	3.19	7.85	5.14	3.46
		33°C	9.78	6.84	2.83	9.43	6.71	2.85	9.08	6.58	2.92	8.72	6.44	3.00	8.35	6.30	3.20	7.89	6.12	3.47
		36°C	9.85	7.78	2.83	9.51	7.63	2.85	9.18	7.47	2.92	8.84	7.29	3.01	8.51	7.09	3.21	8.12	6.82	3.49
850	16°C	21°C	8.15	4.94	2.76	7.85	4.81	2.76	7.55	4.68	2.82	7.24	4.54	2.90	6.91	4.40	3.08	6.51	4.22	3.34
		24°C	8.18	6.00	2.76	7.88	5.86	2.77	7.58	5.72	2.82	7.27	5.57	2.90	6.95	5.42	3.08	6.55	5.23	3.34
		27°C	8.28	6.93	2.76	8.01	6.75	2.77	7.74	6.56	2.83	7.46	6.36	2.91	7.19	6.13	3.10	6.85	5.83	3.37
		30°C	8.71	7.43	2.78	8.45	7.21	2.80	8.19	6.99	2.86	7.92	6.75	2.94	7.64	6.51	3.14	7.29	6.21	3.41
	19°C	24°C	8.97	4.92	2.79	8.64	4.79	2.81	8.32	4.67	2.87	7.98	4.53	2.95	7.63	4.40	3.13	7.19	4.23	3.40
		27°C	9.00	6.00	2.79	8.67	5.87	2.81	8.34	5.73	2.87	8.01	5.59	2.95	7.65	5.45	3.14	7.22	5.27	3.40
		30°C	9.04	7.02	2.80	8.71	6.87	2.81	8.40	6.72	2.87	8.07	6.56	2.95	7.74	6.38	3.14	7.34	6.15	3.41
		33°C	9.22	7.83	2.80	8.94	7.62	2.82	8.67	7.40	2.89	8.39	7.15	2.98	8.10	6.91	3.17	7.74	6.60	3.45
	22°C	27°C	9.84	4.87	2.83	9.49	4.75	2.85	9.13	4.63	2.92	8.77	4.50	3.00	8.39	4.37	3.20	7.92	4.21	3.47
		30°C	9.87	5.98	2.84	9.51	5.84	2.85	9.16	5.71	2.92	8.79	5.57	3.01	8.41	5.43	3.20	7.95	5.26	3.47
		33°C	9.90	7.01	2.84	9.54	6.87	2.86	9.18	6.74	2.92	8.82	6.60	3.01	8.45	6.45	3.20	7.99	6.26	3.47
		36°C	9.96	7.98	2.84	9.62	7.81	2.86	9.28	7.65	2.93	8.95	7.46	3.02	8.61	7.26	3.22	8.21	6.97	3.50

Remark:
AFR: Air flow rate (CFM)
EWB: Entering Wet Bulb Temp. (˚C)
EDB: Entering Dry Bulb Temp. (˚C)
TC: Total Cooling Capacity (kW)
SHC: Sensible Heat Capacity (kW)
PI: Power Input

Notes:
1. Ratings shown are gross capacities which do not include a deduction for indoor fan motor heat.
2. shows nominal capacities.
3. Direct interpolation is permissible. Do not extrapolate.

Model: ACC28C - ALC~~30C~~ 30D
Cooling Mode

AFR (CFM)	EWB	EDB	Outdoor temperature																	
			19°C			25°C			30°C			35°C			40°C			46°C		
			TC	SHC	PI	TC	SHC	PI	TC	SHC	PI	TC	SHC	PI	TC	SHC	PI	TC	SHC	PI
710	16°C	21°C	8.00	4.57	2.62	7.71	4.46	2.62	7.41	4.34	2.67	7.11	4.22	2.75	6.79	4.10	2.92	6.40	3.94	3.17
		24°C	8.03	5.55	2.62	7.74	5.43	2.62	7.44	5.31	2.68	7.14	5.18	2.75	6.83	5.05	2.92	6.44	4.88	3.17
		27°C	8.13	6.41	2.62	7.86	6.26	2.63	7.60	6.09	2.68	7.33	5.91	2.76	7.06	5.70	2.94	6.73	5.44	3.20
		30°C	8.54	6.88	2.64	8.30	6.68	2.65	8.04	6.48	2.71	7.78	6.28	2.79	7.51	6.06	2.97	7.16	5.79	3.23
	19°C	24°C	8.80	4.56	2.65	8.49	4.44	2.66	8.17	4.33	2.72	7.84	4.21	2.79	7.49	4.09	2.97	7.07	3.95	3.22
		27°C	8.83	5.56	2.65	8.51	5.44	2.66	8.19	5.32	2.72	7.86	5.19	2.80	7.52	5.07	2.98	7.09	4.91	3.23
		30°C	8.87	6.50	2.65	8.55	6.37	2.66	8.25	6.24	2.72	7.93	6.09	2.80	7.61	5.94	2.98	7.21	5.73	3.24
		33°C	9.05	7.25	2.66	8.78	7.06	2.68	8.52	6.86	2.74	8.25	6.65	2.82	7.96	6.43	3.01	7.61	6.15	3.27
	22°C	27°C	9.66	4.51	2.69	9.32	4.40	2.71	8.97	4.29	2.77	8.61	4.18	2.85	8.24	4.07	3.03	7.78	3.92	3.29
		30°C	9.68	5.53	2.69	9.34	5.42	2.71	8.99	5.30	2.77	8.64	5.18	2.85	8.27	5.06	3.03	7.81	4.91	3.29
		33°C	9.71	6.49	2.69	9.37	6.37	2.71	9.02	6.25	2.77	8.66	6.13	2.85	8.30	6.00	3.04	7.85	5.84	3.29
		36°C	9.77	7.39	2.69	9.44	7.24	2.71	9.12	7.10	2.78	8.79	6.94	2.86	8.46	6.75	3.05	8.07	6.50	3.32
770	16°C	21°C	8.21	4.82	2.63	7.91	4.69	2.64	7.60	4.57	2.69	7.29	4.44	2.76	6.96	4.31	2.94	6.56	4.14	3.18
		24°C	8.24	5.85	2.63	7.94	5.72	2.64	7.63	5.59	2.69	7.32	5.45	2.76	7.00	5.31	2.94	6.60	5.12	3.19
		27°C	8.34	6.76	2.63	8.06	6.59	2.64	7.79	6.41	2.70	7.52	6.21	2.77	7.24	6.00	2.96	6.90	5.71	3.21
		30°C	8.77	7.25	2.65	8.51	7.04	2.67	8.25	6.82	2.73	7.98	6.60	2.81	7.70	6.37	2.99	7.34	6.09	3.25
	19°C	24°C	9.03	4.80	2.66	8.70	4.68	2.67	8.37	4.56	2.73	8.04	4.43	2.81	7.68	4.30	2.99	7.25	4.15	3.24
		27°C	9.06	5.86	2.66	8.73	5.73	2.68	8.40	5.60	2.73	8.06	5.46	2.81	7.71	5.33	2.99	7.27	5.16	3.24
		30°C	9.10	6.85	2.67	8.77	6.71	2.68	8.46	6.57	2.74	8.13	6.41	2.81	7.80	6.24	3.00	7.39	6.02	3.25
		33°C	9.28	7.63	2.67	9.00	7.44	2.69	8.73	7.22	2.75	8.45	7.00	2.84	8.16	6.76	3.03	7.80	6.46	3.29
	22°C	27°C	9.91	4.75	2.70	9.56	4.64	2.72	9.20	4.52	2.78	8.83	4.40	2.86	8.45	4.28	3.05	7.98	4.12	3.31
		30°C	9.94	5.83	2.70	9.58	5.70	2.72	9.22	5.58	2.78	8.85	5.45	2.87	8.47	5.32	3.05	8.00	5.15	3.31
		33°C	9.96	6.84	2.70	9.61	6.71	2.72	9.25	6.58	2.79	8.88	6.45	2.87	8.51	6.31	3.05	8.04	6.13	3.31
		36°C	10.03	7.78	2.71	9.69	7.63	2.73	9.35	7.47	2.79	9.01	7.30	2.88	8.67	7.10	3.07	8.27	6.83	3.33
810	16°C	21°C	8.35	5.00	2.64	8.05	4.87	2.65	7.74	4.74	2.70	7.42	4.60	2.77	7.09	4.46	2.95	6.67	4.28	3.20
		24°C	8.39	6.07	2.64	8.08	5.93	2.65	7.77	5.79	2.70	7.45	5.65	2.77	7.13	5.50	2.95	6.72	5.30	3.20
		27°C	8.49	7.01	2.64	8.21	6.83	2.65	7.93	6.64	2.71	7.65	6.44	2.78	7.37	6.21	2.97	7.02	5.91	3.22
		30°C	8.92	7.52	2.66	8.66	7.30	2.68	8.40	7.07	2.74	8.12	6.84	2.82	7.83	6.60	3.00	7.47	6.30	3.26
	19°C	24°C	9.19	4.98	2.67	8.86	4.85	2.68	8.52	4.72	2.74	8.18	4.59	2.82	7.82	4.46	3.00	7.37	4.29	3.25
		27°C	9.22	6.07	2.67	8.89	5.94	2.69	8.55	5.80	2.74	8.21	5.66	2.82	7.85	5.52	3.00	7.40	5.34	3.26
		30°C	9.26	7.10	2.68	8.93	6.96	2.69	8.61	6.81	2.75	8.28	6.64	2.83	7.94	6.47	3.01	7.52	6.23	3.27
		33°C	9.45	7.92	2.68	9.17	7.71	2.70	8.89	7.49	2.76	8.60	7.25	2.85	8.31	7.00	3.04	7.94	6.69	3.30
	22°C	27°C	10.09	4.93	2.71	9.73	4.81	2.73	9.36	4.69	2.79	8.99	4.56	2.87	8.60	4.43	3.06	8.12	4.27	3.32
		30°C	10.12	6.05	2.71	9.75	5.91	2.73	9.39	5.78	2.79	9.01	5.65	2.88	8.62	5.51	3.06	8.14	5.33	3.32
		33°C	10.14	7.09	2.71	9.78	6.96	2.73	9.41	6.82	2.80	9.04	6.68	2.88	8.66	6.54	3.06	8.18	6.35	3.32
		36°C	10.21	8.07	2.72	9.86	7.91	2.74	9.52	7.74	2.80	9.17	7.56	2.89	8.83	7.35	3.08	8.42	7.07	3.35
850	16°C	21°C	8.45	5.12	2.64	8.14	4.99	2.65	7.83	4.85	2.70	7.51	4.71	2.78	7.17	4.56	2.95	6.75	4.38	3.20
		24°C	8.49	6.22	2.65	8.17	6.07	2.65	7.86	5.93	2.71	7.54	5.78	2.78	7.21	5.63	2.96	6.80	5.42	3.20
		27°C	8.59	7.18	2.65	8.30	7.00	2.66	8.02	6.80	2.71	7.74	6.59	2.79	7.45	6.35	2.97	7.10	6.05	3.23
		30°C	9.03	7.70	2.67	8.76	7.47	2.68	8.49	7.24	2.74	8.22	7.00	2.82	7.93	6.76	3.01	7.56	6.44	3.27
	19°C	24°C	9.30	5.10	2.68	8.96	4.97	2.69	8.62	4.84	2.75	8.27	4.70	2.83	7.91	4.56	3.01	7.46	4.39	3.26
		27°C	9.33	6.22	2.68	8.99	6.08	2.69	8.65	5.94	2.75	8.30	5.80	2.83	7.94	5.65	3.01	7.49	5.46	3.26
		30°C	9.37	7.28	2.68	9.03	7.13	2.69	8.71	6.97	2.75	8.37	6.80	2.83	8.03	6.62	3.01	7.61	6.38	3.27
		33°C	9.56	8.12	2.69	9.27	7.90	2.71	8.99	7.67	2.77	8.71	7.42	2.85	8.40	7.16	3.04	8.03	6.84	3.31
	22°C	27°C	10.21	5.05	2.72	9.84	4.93	2.74	9.47	4.80	2.80	9.10	4.67	2.88	8.70	4.53	3.07	8.22	4.36	3.32
		30°C	10.23	6.20	2.72	9.87	6.06	2.74	9.50	5.92	2.80	9.12	5.78	2.88	8.73	5.63	3.07	8.24	5.46	3.33
		33°C	10.26	7.27	2.72	9.89	7.13	2.74	9.52	6.99	2.80	9.14	6.84	2.88	8.76	6.69	3.07	8.28	6.49	3.33
		36°C	10.33	8.27	2.72	9.97	8.10	2.74	9.63	7.93	2.81	9.28	7.74	2.89	8.93	7.52	3.08	8.52	7.23	3.35

Model: ACC28C - ALC~~30C~~(3 Phase)
Cooling Mode 30D

AFR (CFM)	EWB	EDB	Outdoor temperature																	
			19°C			25°C			30°C			35°C			40°C			46°C		
			TC	SHC	PI	TC	SHC	PI	TC	SHC	PI	TC	SHC	PI	TC	SHC	PI	TC	SHC	PI
710	16°C	21°C	8.00	4.57	2.76	7.71	4.46	2.77	7.41	4.34	2.83	7.11	4.22	2.90	6.79	4.10	3.09	6.40	3.94	3.35
		24°C	8.03	5.55	2.77	7.74	5.43	2.77	7.44	5.31	2.83	7.14	5.18	2.90	6.83	5.05	3.09	6.44	4.88	3.35
		27°C	8.13	6.41	2.77	7.86	6.26	2.78	7.60	6.09	2.84	7.33	5.91	2.92	7.06	5.70	3.11	6.73	5.44	3.38
		30°C	8.54	6.88	2.79	8.30	6.68	2.80	8.04	6.48	2.86	7.78	6.28	2.95	7.51	6.06	3.14	7.16	5.79	3.42
	19°C	24°C	8.80	4.56	2.80	8.49	4.44	2.81	8.17	4.33	2.87	7.84	4.21	2.95	7.49	4.09	3.14	7.07	3.95	3.41
		27°C	8.83	5.56	2.80	8.51	5.44	2.81	8.19	5.32	2.87	7.86	5.19	2.95	7.52	5.07	3.14	7.09	4.91	3.41
		30°C	8.87	6.50	2.80	8.55	6.37	2.82	8.25	6.24	2.88	7.93	6.09	2.96	7.61	5.94	3.15	7.21	5.73	3.42
		33°C	9.05	7.25	2.81	8.78	7.06	2.83	8.52	6.86	2.90	8.25	6.65	2.98	7.96	6.43	3.18	7.61	6.15	3.46
	22°C	27°C	9.66	4.51	2.84	9.32	4.40	2.86	8.97	4.29	2.92	8.61	4.18	3.01	8.24	4.07	3.20	7.78	3.92	3.47
		30°C	9.68	5.53	2.84	9.34	5.42	2.86	8.99	5.30	2.93	8.64	5.18	3.01	8.27	5.06	3.21	7.81	4.91	3.48
		33°C	9.71	6.49	2.84	9.37	6.37	2.86	9.02	6.25	2.93	8.66	6.13	3.01	8.30	6.00	3.21	7.85	5.84	3.48
		36°C	9.77	7.39	2.85	9.44	7.24	2.87	9.12	7.10	2.93	8.79	6.94	3.02	8.46	6.75	3.22	8.07	6.50	3.50
770	16°C	21°C	8.21	4.82	2.78	7.91	4.69	2.78	7.60	4.57	2.84	7.29	4.44	2.92	6.96	4.31	3.10	6.56	4.14	3.36
		24°C	8.24	5.85	2.78	7.94	5.72	2.79	7.63	5.59	2.84	7.32	5.45	2.92	7.00	5.31	3.11	6.60	5.12	3.37
		27°C	8.34	6.76	2.78	8.06	6.59	2.79	7.79	6.41	2.85	7.52	6.21	2.93	7.24	6.00	3.12	6.90	5.71	3.39
		30°C	8.77	7.25	2.80	8.51	7.04	2.82	8.25	6.82	2.88	7.98	6.60	2.96	7.70	6.37	3.16	7.34	6.09	3.43
	19°C	24°C	9.03	4.80	2.81	8.70	4.68	2.83	8.37	4.56	2.89	8.04	4.43	2.97	7.68	4.30	3.16	7.25	4.15	3.42
		27°C	9.06	5.86	2.82	8.73	5.73	2.83	8.40	5.60	2.89	8.06	5.46	2.97	7.71	5.33	3.16	7.27	5.16	3.43
		30°C	9.10	6.85	2.82	8.77	6.71	2.83	8.46	6.57	2.89	8.13	6.41	2.97	7.80	6.24	3.17	7.39	6.02	3.44
		33°C	9.28	7.63	2.83	9.00	7.44	2.84	8.73	7.22	2.91	8.45	7.00	3.00	8.16	6.76	3.20	7.80	6.46	3.48
	22°C	27°C	9.91	4.75	2.86	9.56	4.64	2.87	9.20	4.52	2.94	8.83	4.40	3.03	8.45	4.28	3.22	7.98	4.12	3.49
		30°C	9.94	5.83	2.86	9.58	5.70	2.88	9.22	5.58	2.94	8.85	5.45	3.03	8.47	5.32	3.22	8.00	5.15	3.50
		33°C	9.96	6.84	2.86	9.61	6.71	2.88	9.25	6.58	2.94	8.88	6.45	3.03	8.51	6.31	3.23	8.04	6.13	3.50
		36°C	10.03	7.78	2.86	9.69	7.63	2.88	9.35	7.47	2.95	9.01	7.30	3.04	8.67	7.10	3.24	8.27	6.83	3.52
810	16°C	21°C	8.35	5.00	2.79	8.05	4.87	2.80	7.74	4.74	2.85	7.42	4.60	2.93	7.09	4.46	3.11	6.67	4.28	3.38
		24°C	8.39	6.07	2.79	8.08	5.93	2.80	7.77	5.79	2.85	7.45	5.65	2.93	7.13	5.50	3.12	6.72	5.30	3.38
		27°C	8.49	7.01	2.79	8.21	6.83	2.80	7.93	6.64	2.86	7.65	6.44	2.94	7.37	6.21	3.13	7.02	5.91	3.41
		30°C	8.92	7.52	2.81	8.66	7.30	2.83	8.40	7.07	2.89	8.12	6.84	2.98	7.83	6.60	3.17	7.47	6.30	3.45
	19°C	24°C	9.19	4.98	2.82	8.86	4.85	2.84	8.52	4.72	2.90	8.18	4.59	2.98	7.82	4.46	3.17	7.37	4.29	3.44
		27°C	9.22	6.07	2.83	8.89	5.94	2.84	8.55	5.80	2.90	8.21	5.66	2.98	7.85	5.52	3.17	7.40	5.34	3.44
		30°C	9.26	7.10	2.83	8.93	6.96	2.84	8.61	6.81	2.90	8.28	6.64	2.99	7.94	6.47	3.18	7.52	6.23	3.45
		33°C	9.45	7.92	2.84	9.17	7.71	2.85	8.89	7.49	2.92	8.60	7.25	3.01	8.31	7.00	3.21	7.94	6.69	3.49
	22°C	27°C	10.09	4.93	2.87	9.73	4.81	2.88	9.36	4.69	2.95	8.99	4.56	3.04	8.60	4.43	3.23	8.12	4.27	3.50
		30°C	10.12	6.05	2.87	9.75	5.91	2.89	9.39	5.78	2.95	9.01	5.65	3.04	8.62	5.51	3.23	8.14	5.33	3.51
		33°C	10.14	7.09	2.87	9.78	6.96	2.89	9.41	6.82	2.96	9.04	6.68	3.04	8.66	6.54	3.24	8.18	6.35	3.51
		36°C	10.21	8.07	2.87	9.86	7.91	2.89	9.52	7.74	2.96	9.17	7.56	3.05	8.83	7.35	3.25	8.42	7.07	3.53
850	16°C	21°C	8.45	5.12	2.79	8.14	4.99	2.80	7.83	4.85	2.86	7.51	4.71	2.93	7.17	4.56	3.12	6.75	4.38	3.38
		24°C	8.49	6.22	2.80	8.17	6.07	2.80	7.86	5.93	2.86	7.54	5.78	2.94	7.21	5.63	3.12	6.80	5.42	3.39
		27°C	8.59	7.18	2.80	8.30	7.00	2.81	8.02	6.80	2.87	7.74	6.59	2.95	7.45	6.35	3.14	7.10	6.05	3.41
		30°C	9.03	7.70	2.82	8.76	7.47	2.83	8.49	7.24	2.90	8.22	7.00	2.98	7.93	6.76	3.18	7.56	6.44	3.45
	19°C	24°C	9.30	5.10	2.83	8.96	4.97	2.84	8.62	4.84	2.90	8.27	4.70	2.99	7.91	4.56	3.18	7.46	4.39	3.44
		27°C	9.33	6.22	2.83	8.99	6.08	2.85	8.65	5.94	2.91	8.30	5.80	2.99	7.94	5.65	3.18	7.49	5.46	3.45
		30°C	9.37	7.28	2.83	9.03	7.13	2.85	8.71	6.97	2.91	8.37	6.80	2.99	8.03	6.62	3.19	7.61	6.38	3.46
		33°C	9.56	8.12	2.84	9.27	7.90	2.86	8.99	7.67	2.93	8.71	7.42	3.02	8.40	7.16	3.22	8.03	6.84	3.50
	22°C	27°C	10.21	5.05	2.87	9.84	4.93	2.89	9.47	4.80	2.96	9.10	4.67	3.04	8.70	4.53	3.24	8.22	4.36	3.51
		30°C	10.23	6.20	2.87	9.87	6.06	2.89	9.50	5.92	2.96	9.12	5.78	3.05	8.73	5.63	3.24	8.24	5.46	3.52
		33°C	10.26	7.27	2.87	9.89	7.13	2.89	9.52	6.99	2.96	9.14	6.84	3.05	8.76	6.69	3.24	8.28	6.49	3.52
		36°C	10.33	8.27	2.88	9.97	8.10	2.90	9.63	7.93	2.97	9.28	7.74	3.06	8.93	7.52	3.26	8.52	7.23	3.54

Remark:
AFR: Air flow rate (CFM)
EWB: Entering Wet Bulb Temp. (˚C)
EDB: Entering Dry Bulb Temp. (˚C)

TC: Total Cooling Capacity (kW)
SHC: Sensible Heat Capacity (kW)
PI: Power Input

Notes:
1. Ratings shown are gross capacities which do not include a deduction for indoor fan motor heat.
2. shows nominal capacities.
3. Direct interpolation is permissible. Do not extrapolate.

Model: ACC30C - ALC28C
Cooling Mode

AFR (CFM)	EWB	EDB	Outdoor temperature																	
			19°C			25°C			30°C			35°C			40°C			46°C		
			TC	SHC	PI	TC	SHC	PI	TC	SHC	PI	TC	SHC	PI	TC	SHC	PI	TC	SHC	PI
710	16°C	21°C	8.38	5.49	2.78	8.08	5.35	2.79	7.77	5.21	2.84	7.45	5.07	2.92	7.12	4.92	3.10	6.70	4.73	3.37
		24°C	8.42	6.66	2.78	8.11	6.51	2.79	7.80	6.37	2.84	7.49	6.22	2.92	7.16	6.06	3.11	6.75	5.85	3.37
		27°C	8.52	7.70	2.78	8.24	7.51	2.79	7.97	7.31	2.85	7.68	7.09	2.93	7.40	6.84	3.12	7.05	6.53	3.39
		30°C	8.95	8.25	2.80	8.70	8.02	2.82	8.43	7.78	2.88	8.16	7.53	2.96	7.87	7.27	3.16	7.51	6.95	3.44
	19°C	24°C	9.22	5.47	2.81	8.89	5.33	2.83	8.56	5.20	2.89	8.22	5.06	2.97	7.86	4.91	3.16	7.41	4.74	3.43
		27°C	9.26	6.67	2.82	8.92	6.52	2.83	8.59	6.38	2.89	8.24	6.23	2.97	7.88	6.08	3.16	7.44	5.90	3.43
		30°C	9.30	7.80	2.82	8.97	7.64	2.83	8.64	7.48	2.89	8.31	7.31	2.97	7.97	7.13	3.17	7.56	6.88	3.44
		33°C	9.49	8.70	2.83	9.20	8.47	2.84	8.93	8.24	2.91	8.64	7.98	3.00	8.35	7.71	3.20	7.97	7.38	3.48
	22°C	27°C	10.13	5.42	2.86	9.77	5.29	2.87	9.40	5.15	2.94	9.03	5.02	3.03	8.64	4.88	3.22	8.16	4.71	3.49
		30°C	10.15	6.64	2.86	9.79	6.50	2.88	9.43	6.36	2.94	9.05	6.22	3.03	8.66	6.07	3.22	8.18	5.89	3.50
		33°C	10.18	7.79	2.86	9.82	7.64	2.88	9.45	7.50	2.94	9.08	7.36	3.03	8.70	7.20	3.23	8.22	7.01	3.50
		36°C	10.25	8.86	2.86	9.90	8.69	2.88	9.56	8.52	2.95	9.21	8.32	3.04	8.87	8.10	3.24	8.46	7.80	3.52
760	16°C	21°C	8.60	5.78	2.79	8.29	5.63	2.80	7.97	5.48	2.86	7.64	5.33	2.93	7.30	5.17	3.12	6.87	4.97	3.38
		24°C	8.64	7.02	2.79	8.32	6.86	2.80	8.00	6.71	2.86	7.68	6.54	2.93	7.34	6.37	3.12	6.92	6.15	3.39
		27°C	8.74	8.11	2.80	8.45	7.91	2.81	8.17	7.69	2.87	7.88	7.46	2.95	7.59	7.20	3.14	7.23	6.86	3.41
		30°C	9.19	8.70	2.82	8.92	8.44	2.83	8.65	8.19	2.90	8.37	7.93	2.98	8.07	7.65	3.18	7.70	7.30	3.45
	19°C	24°C	9.46	5.76	2.83	9.12	5.62	2.84	8.78	5.47	2.90	8.42	5.32	2.98	8.05	5.17	3.17	7.60	4.98	3.44
		27°C	9.50	7.03	2.83	9.15	6.87	2.84	8.81	6.72	2.90	8.45	6.56	2.99	8.08	6.40	3.18	7.62	6.19	3.45
		30°C	9.54	8.22	2.83	9.20	8.05	2.85	8.86	7.88	2.91	8.52	7.69	2.99	8.17	7.50	3.18	7.75	7.23	3.46
		33°C	9.73	9.16	2.84	9.44	8.93	2.86	9.15	8.67	2.93	8.86	8.40	3.01	8.56	8.11	3.22	8.18	7.76	3.50
	22°C	27°C	10.39	5.71	2.87	10.02	5.57	2.89	9.64	5.43	2.96	9.26	5.28	3.04	8.86	5.13	3.24	8.37	4.95	3.51
		30°C	10.42	7.00	2.87	10.04	6.85	2.89	9.67	6.69	2.96	9.28	6.54	3.04	8.88	6.38	3.24	8.39	6.19	3.51
		33°C	10.44	8.21	2.87	10.07	8.05	2.89	9.69	7.90	2.96	9.31	7.74	3.05	8.92	7.58	3.24	8.43	7.36	3.52
		36°C	10.51	9.34	2.88	10.15	9.15	2.90	9.80	8.97	2.97	9.45	8.76	3.06	9.09	8.52	3.26	8.67	8.20	3.54
830	16°C	21°C	8.76	6.00	2.80	8.43	5.84	2.81	8.11	5.68	2.87	7.78	5.52	2.94	7.43	5.35	3.13	6.99	5.14	3.39
		24°C	8.79	7.28	2.80	8.47	7.11	2.81	8.15	6.95	2.87	7.81	6.78	2.95	7.47	6.60	3.13	7.04	6.36	3.40
		27°C	8.90	8.41	2.81	8.60	8.20	2.82	8.31	7.97	2.88	8.02	7.73	2.96	7.72	7.45	3.15	7.36	7.10	3.42
		30°C	9.35	9.02	2.83	9.08	8.76	2.84	8.80	8.49	2.91	8.51	8.21	2.99	8.21	7.92	3.19	7.83	7.56	3.47
	19°C	24°C	9.63	5.98	2.84	9.29	5.82	2.85	8.93	5.67	2.91	8.57	5.51	2.99	8.20	5.35	3.19	7.73	5.15	3.46
		27°C	9.67	7.29	2.84	9.32	7.13	2.85	8.96	6.96	2.92	8.60	6.80	3.00	8.23	6.62	3.19	7.76	6.41	3.46
		30°C	9.71	8.53	2.84	9.36	8.35	2.86	9.02	8.17	2.92	8.67	7.97	3.00	8.32	7.76	3.20	7.88	7.48	3.47
		33°C	9.91	9.51	2.85	9.61	9.26	2.87	9.32	8.99	2.94	9.02	8.70	3.03	8.71	8.40	3.23	8.32	8.03	3.51
	22°C	27°C	10.58	5.92	2.88	10.20	5.77	2.90	9.82	5.62	2.97	9.42	5.47	3.05	9.02	5.31	3.25	8.51	5.12	3.52
		30°C	10.60	7.26	2.88	10.22	7.10	2.90	9.84	6.94	2.97	9.45	6.78	3.06	9.04	6.61	3.25	8.54	6.40	3.53
		33°C	10.63	8.51	2.88	10.25	8.35	2.90	9.87	8.19	2.97	9.47	8.02	3.06	9.08	7.84	3.26	8.58	7.62	3.53
		36°C	10.70	9.69	2.89	10.33	9.49	2.91	9.98	9.29	2.98	9.61	9.07	3.07	9.26	8.82	3.27	8.82	8.48	3.55
900	16°C	21°C	8.86	6.15	2.81	8.53	5.98	2.82	8.21	5.82	2.87	7.87	5.65	2.95	7.52	5.48	3.14	7.08	5.26	3.40
		24°C	8.90	7.46	2.81	8.57	7.29	2.82	8.24	7.12	2.88	7.90	6.94	2.95	7.56	6.75	3.14	7.13	6.51	3.40
		27°C	9.00	8.62	2.81	8.71	8.40	2.82	8.41	8.17	2.88	8.11	7.91	2.97	7.81	7.63	3.16	7.44	7.26	3.43
		30°C	9.46	9.24	2.83	9.19	8.97	2.85	8.90	8.70	2.91	8.61	8.41	3.00	8.31	8.11	3.20	7.93	7.73	3.47
	19°C	24°C	9.75	6.12	2.85	9.40	5.97	2.86	9.04	5.81	2.92	8.67	5.64	3.00	8.29	5.47	3.19	7.82	5.27	3.46
		27°C	9.78	7.47	2.85	9.43	7.30	2.86	9.07	7.13	2.92	8.70	6.96	3.00	8.32	6.78	3.20	7.85	6.56	3.47
		30°C	9.82	8.74	2.85	9.47	8.55	2.86	9.13	8.36	2.93	8.78	8.16	3.01	8.42	7.94	3.20	7.98	7.65	3.48
		33°C	10.02	9.74	2.86	9.72	9.48	2.88	9.43	9.20	2.94	9.13	8.91	3.03	8.81	8.60	3.23	8.42	8.21	3.52
	22°C	27°C	10.70	6.06	2.89	10.32	5.91	2.91	9.93	5.76	2.97	9.53	5.60	3.06	9.12	5.44	3.26	8.61	5.24	3.53
		30°C	10.73	7.44	2.89	10.34	7.27	2.91	9.95	7.11	2.98	9.56	6.94	3.06	9.15	6.76	3.26	8.64	6.55	3.53
		33°C	10.76	8.72	2.89	10.37	8.55	2.91	9.98	8.39	2.98	9.59	8.21	3.06	9.18	8.03	3.26	8.68	7.79	3.54
		36°C	10.83	9.93	2.89	10.46	9.73	2.91	10.09	9.52	2.98	9.73	9.29	3.07	9.36	9.03	3.28	8.93	8.68	3.56

Model: ACC30C - ALC~~30C~~ 30D
Cooling Mode

AFR (CFM)	EWB	EDB	Outdoor temperature																	
			19°C			25°C			30°C			35°C			40°C			46°C		
			TC	SHC	PI	TC	SHC	PI	TC	SHC	PI	TC	SHC	PI	TC	SHC	PI	TC	SHC	PI
710	16°C	21°C	8.28	5.42	2.59	7.98	5.28	2.60	7.67	5.14	2.65	7.36	5.00	2.72	7.03	4.85	2.90	6.62	4.67	3.14
		24°C	8.31	6.58	2.60	8.01	6.43	2.60	7.71	6.29	2.66	7.39	6.14	2.73	7.07	5.98	2.90	6.66	5.78	3.15
		27°C	8.41	7.60	2.60	8.14	7.41	2.61	7.87	7.21	2.66	7.59	7.00	2.74	7.31	6.76	2.92	6.96	6.45	3.17
		30°C	8.84	8.15	2.62	8.59	7.92	2.63	8.33	7.68	2.69	8.06	7.44	2.77	7.77	7.18	2.95	7.41	6.86	3.21
	19°C	24°C	9.11	5.40	2.63	8.78	5.26	2.64	8.45	5.13	2.70	8.11	4.99	2.77	7.76	4.85	2.95	7.31	4.68	3.20
		27°C	9.14	6.59	2.63	8.81	6.44	2.64	8.48	6.30	2.70	8.14	6.15	2.77	7.78	6.00	2.95	7.34	5.82	3.20
		30°C	9.18	7.70	2.63	8.85	7.55	2.64	8.53	7.39	2.70	8.21	7.22	2.78	7.87	7.04	2.96	7.46	6.79	3.21
		33°C	9.36	8.59	2.64	9.09	8.37	2.66	8.81	8.13	2.72	8.53	7.88	2.80	8.24	7.62	2.99	7.87	7.29	3.25
	22°C	27°C	10.00	5.35	2.67	9.64	5.22	2.68	9.29	5.09	2.75	8.92	4.95	2.83	8.53	4.82	3.01	8.06	4.65	3.26
		30°C	10.02	6.56	2.67	9.67	6.42	2.69	9.31	6.28	2.75	8.94	6.14	2.83	8.55	5.99	3.01	8.08	5.81	3.27
		33°C	10.05	7.69	2.67	9.69	7.55	2.69	9.33	7.41	2.75	8.96	7.26	2.83	8.59	7.11	3.01	8.12	6.92	3.27
		36°C	10.12	8.75	2.67	9.77	8.58	2.69	9.44	8.41	2.76	9.10	8.22	2.84	8.76	8.00	3.03	8.35	7.71	3.29
760	16°C	21°C	8.49	5.71	2.61	8.18	5.56	2.61	7.87	5.41	2.67	7.54	5.26	2.74	7.21	5.10	2.91	6.79	4.90	3.16
		24°C	8.53	6.93	2.61	8.21	6.77	2.62	7.90	6.62	2.67	7.58	6.46	2.74	7.25	6.29	2.92	6.83	6.07	3.16
		27°C	8.63	8.01	2.61	8.35	7.81	2.62	8.06	7.60	2.68	7.78	7.36	2.75	7.49	7.10	2.93	7.14	6.77	3.19
		30°C	9.07	8.59	2.63	8.81	8.34	2.64	8.54	8.09	2.70	8.26	7.82	2.78	7.97	7.55	2.97	7.60	7.21	3.22
	19°C	24°C	9.34	5.69	2.64	9.01	5.54	2.65	8.67	5.40	2.71	8.32	5.25	2.79	7.95	5.10	2.96	7.50	4.91	3.22
		27°C	9.38	6.94	2.64	9.04	6.78	2.66	8.70	6.63	2.71	8.35	6.48	2.79	7.98	6.31	2.97	7.53	6.12	3.22
		30°C	9.42	8.11	2.64	9.08	7.95	2.66	8.75	7.78	2.72	8.42	7.59	2.79	8.07	7.40	2.97	7.65	7.14	3.23
		33°C	9.61	9.05	2.65	9.32	8.81	2.67	9.04	8.56	2.73	8.75	8.29	2.82	8.45	8.01	3.00	8.07	7.66	3.27
	22°C	27°C	10.26	5.63	2.68	9.89	5.50	2.70	9.52	5.36	2.76	9.14	5.21	2.84	8.75	5.07	3.02	8.26	4.88	3.28
		30°C	10.28	6.91	2.68	9.92	6.76	2.70	9.54	6.61	2.76	9.16	6.46	2.84	8.77	6.30	3.03	8.28	6.11	3.28
		33°C	10.31	8.10	2.68	9.94	7.95	2.70	9.57	7.80	2.76	9.19	7.64	2.85	8.80	7.48	3.03	8.32	7.27	3.29
		36°C	10.38	9.22	2.69	10.02	9.04	2.71	9.68	8.85	2.77	9.33	8.65	2.85	8.98	8.41	3.04	8.56	8.09	3.31
830	16°C	21°C	8.65	5.92	2.62	8.33	5.77	2.62	8.01	5.61	2.68	7.68	5.45	2.75	7.34	5.29	2.92	6.91	5.07	3.17
		24°C	8.68	7.19	2.62	8.36	7.02	2.63	8.04	6.86	2.68	7.71	6.69	2.75	7.37	6.51	2.93	6.95	6.28	3.17
		27°C	8.78	8.31	2.62	8.49	8.10	2.63	8.21	7.87	2.69	7.92	7.63	2.76	7.63	7.36	2.94	7.26	7.01	3.20
		30°C	9.24	8.91	2.64	8.96	8.65	2.65	8.69	8.38	2.71	8.41	8.11	2.79	8.11	7.82	2.98	7.73	7.46	3.24
	19°C	24°C	9.51	5.90	2.65	9.17	5.75	2.66	8.82	5.60	2.72	8.46	5.44	2.80	8.09	5.28	2.98	7.63	5.08	3.23
		27°C	9.54	7.20	2.65	9.20	7.04	2.67	8.85	6.87	2.72	8.49	6.71	2.80	8.12	6.54	2.98	7.66	6.33	3.23
		30°C	9.59	8.42	2.65	9.24	8.24	2.67	8.91	8.06	2.73	8.56	7.87	2.80	8.21	7.66	2.98	7.78	7.39	3.24
		33°C	9.78	9.39	2.66	9.49	9.14	2.68	9.20	8.87	2.74	8.90	8.59	2.83	8.60	8.29	3.01	8.21	7.92	3.28
	22°C	27°C	10.44	5.84	2.69	10.07	5.70	2.71	9.69	5.55	2.77	9.30	5.40	2.85	8.90	5.25	3.04	8.41	5.05	3.29
		30°C	10.47	7.17	2.69	10.09	7.01	2.71	9.71	6.85	2.77	9.33	6.69	2.85	8.93	6.52	3.04	8.43	6.32	3.29
		33°C	10.50	8.41	2.69	10.12	8.24	2.71	9.74	8.08	2.77	9.35	7.92	2.86	8.96	7.75	3.04	8.47	7.52	3.30
		36°C	10.57	9.57	2.70	10.20	9.37	2.72	9.85	9.18	2.78	9.49	8.96	2.86	9.14	8.71	3.05	8.71	8.38	3.32
900	16°C	21°C	8.75	6.07	2.62	8.43	5.91	2.63	8.10	5.75	2.68	7.77	5.58	2.75	7.42	5.41	2.93	6.99	5.19	3.18
		24°C	8.78	7.37	2.62	8.46	7.20	2.63	8.14	7.03	2.69	7.80	6.85	2.76	7.46	6.67	2.93	7.04	6.42	3.18
		27°C	8.89	8.51	2.63	8.59	8.29	2.64	8.30	8.06	2.69	8.01	7.81	2.77	7.71	7.53	2.95	7.35	7.17	3.20
		30°C	9.34	9.13	2.65	9.07	8.86	2.66	8.79	8.59	2.72	8.50	8.30	2.80	8.20	8.00	2.98	7.83	7.63	3.24
	19°C	24°C	9.62	6.05	2.66	9.28	5.89	2.67	8.92	5.73	2.73	8.56	5.57	2.80	8.19	5.40	2.98	7.72	5.20	3.23
		27°C	9.66	7.38	2.66	9.31	7.21	2.67	8.95	7.04	2.73	8.59	6.87	2.81	8.22	6.69	2.98	7.75	6.47	3.24
		30°C	9.70	8.63	2.66	9.35	8.44	2.67	9.01	8.26	2.73	8.67	8.06	2.81	8.31	7.84	2.99	7.88	7.55	3.25
		33°C	9.90	9.62	2.67	9.60	9.36	2.69	9.31	9.09	2.75	9.01	8.79	2.83	8.70	8.49	3.02	8.31	8.10	3.28
	22°C	27°C	10.56	5.99	2.70	10.19	5.84	2.71	9.80	5.69	2.78	9.41	5.53	2.86	9.01	5.37	3.04	8.50	5.17	3.30
		30°C	10.59	7.34	2.70	10.21	7.18	2.72	9.83	7.02	2.78	9.44	6.85	2.86	9.03	6.68	3.04	8.53	6.46	3.30
		33°C	10.62	8.61	2.70	10.24	8.45	2.72	9.86	8.28	2.78	9.46	8.11	2.86	9.07	7.93	3.05	8.57	7.69	3.30
		36°C	10.69	9.80	2.70	10.32	9.60	2.72	9.96	9.40	2.79	9.61	9.17	2.87	9.24	8.92	3.06	8.81	8.57	3.33

Remark:
AFR: Air flow rate (CFM)
EWB: Entering Wet Bulb Temp. (˚C)
EDB: Entering Dry Bulb Temp. (˚C)
TC: Total Cooling Capacity (kW)
SHC: Sensible Heat Capacity (kW)
PI: Power Input

Notes:
1. Ratings shown are gross capacities which do not include a deduction for indoor fan motor heat.
2. shows nominal capacities.
3. Direct interpolation is permissible. Do not extrapolate.

Model: ACC30C - ALC~~30C~~(3 Phase)
Cooling Mode 30D

AFR (CFM)	EWB	EDB	Outdoor temperature																	
			19°C			25°C			30°C			35°C			40°C			46°C		
			TC	SHC	PI	TC	SHC	PI	TC	SHC	PI	TC	SHC	PI	TC	SHC	PI	TC	SHC	PI
710	16°C	21°C	8.28	5.42	2.65	7.98	5.28	2.65	7.67	5.14	2.71	7.36	5.00	2.78	7.03	4.85	2.96	6.62	4.67	3.21
		24°C	8.31	6.58	2.65	8.01	6.43	2.66	7.71	6.29	2.71	7.39	6.14	2.78	7.07	5.98	2.96	6.66	5.78	3.21
		27°C	8.41	7.60	2.65	8.14	7.41	2.66	7.87	7.21	2.72	7.59	7.00	2.79	7.31	6.76	2.98	6.96	6.45	3.23
		30°C	8.84	8.15	2.67	8.59	7.92	2.68	8.33	7.68	2.74	8.06	7.44	2.82	7.77	7.18	3.01	7.41	6.86	3.27
	19°C	24°C	9.11	5.40	2.68	8.78	5.26	2.69	8.45	5.13	2.75	8.11	4.99	2.83	7.76	4.85	3.01	7.31	4.68	3.26
		27°C	9.14	6.59	2.68	8.81	6.44	2.69	8.48	6.30	2.75	8.14	6.15	2.83	7.78	6.00	3.01	7.34	5.82	3.27
		30°C	9.18	7.70	2.68	8.85	7.55	2.70	8.53	7.39	2.76	8.21	7.22	2.83	7.87	7.04	3.02	7.46	6.79	3.28
		33°C	9.36	8.59	2.69	9.09	8.37	2.71	8.81	8.13	2.77	8.53	7.88	2.86	8.24	7.62	3.05	7.87	7.29	3.31
	22°C	27°C	10.00	5.35	2.72	9.64	5.22	2.74	9.29	5.09	2.80	8.92	4.95	2.88	8.53	4.82	3.07	8.06	4.65	3.33
		30°C	10.02	6.56	2.72	9.67	6.42	2.74	9.31	6.28	2.80	8.94	6.14	2.88	8.55	5.99	3.07	8.08	5.81	3.33
		33°C	10.05	7.69	2.72	9.69	7.55	2.74	9.33	7.41	2.80	8.96	7.26	2.89	8.59	7.11	3.07	8.12	6.92	3.33
		36°C	10.12	8.75	2.73	9.77	8.58	2.75	9.44	8.41	2.81	9.10	8.22	2.90	8.76	8.00	3.09	8.35	7.71	3.36
760	16°C	21°C	8.49	5.71	2.66	8.18	5.56	2.67	7.87	5.41	2.72	7.54	5.26	2.79	7.21	5.10	2.97	6.79	4.90	3.22
		24°C	8.53	6.93	2.66	8.21	6.77	2.67	7.90	6.62	2.72	7.58	6.46	2.80	7.25	6.29	2.97	6.83	6.07	3.23
		27°C	8.63	8.01	2.67	8.35	7.81	2.67	8.06	7.60	2.73	7.78	7.36	2.81	7.49	7.10	2.99	7.14	6.77	3.25
		30°C	9.07	8.59	2.68	8.81	8.34	2.70	8.54	8.09	2.76	8.26	7.82	2.84	7.97	7.55	3.03	7.60	7.21	3.29
	19°C	24°C	9.34	5.69	2.69	9.01	5.54	2.71	8.67	5.40	2.76	8.32	5.25	2.84	7.95	5.10	3.02	7.50	4.91	3.28
		27°C	9.38	6.94	2.70	9.04	6.78	2.71	8.70	6.63	2.77	8.35	6.48	2.84	7.98	6.31	3.03	7.53	6.12	3.28
		30°C	9.42	8.11	2.70	9.08	7.95	2.71	8.75	7.78	2.77	8.42	7.59	2.85	8.07	7.40	3.03	7.65	7.14	3.29
		33°C	9.61	9.05	2.71	9.32	8.81	2.72	9.04	8.56	2.79	8.75	8.29	2.87	8.45	8.01	3.06	8.07	7.66	3.33
	22°C	27°C	10.26	5.63	2.73	9.89	5.50	2.75	9.52	5.36	2.82	9.14	5.21	2.90	8.75	5.07	3.08	8.26	4.88	3.35
		30°C	10.28	6.91	2.74	9.92	6.76	2.75	9.54	6.61	2.82	9.16	6.46	2.90	8.77	6.30	3.09	8.28	6.11	3.35
		33°C	10.31	8.10	2.74	9.94	7.95	2.76	9.57	7.80	2.82	9.19	7.64	2.90	8.80	7.48	3.09	8.32	7.27	3.35
		36°C	10.38	9.22	2.74	10.02	9.04	2.76	9.68	8.85	2.83	9.33	8.65	2.91	8.98	8.41	3.10	8.56	8.09	3.37
830	16°C	21°C	8.65	5.92	2.67	8.33	5.77	2.68	8.01	5.61	2.73	7.68	5.45	2.80	7.34	5.29	2.98	6.91	5.07	3.23
		24°C	8.68	7.19	2.67	8.36	7.02	2.68	8.04	6.86	2.73	7.71	6.69	2.81	7.37	6.51	2.98	6.95	6.28	3.24
		27°C	8.78	8.31	2.68	8.49	8.10	2.68	8.21	7.87	2.74	7.92	7.63	2.82	7.63	7.36	3.00	7.26	7.01	3.26
		30°C	9.24	8.91	2.69	8.96	8.65	2.71	8.69	8.38	2.77	8.41	8.11	2.85	8.11	7.82	3.04	7.73	7.46	3.30
	19°C	24°C	9.51	5.90	2.70	9.17	5.75	2.72	8.82	5.60	2.78	8.46	5.44	2.85	8.09	5.28	3.04	7.63	5.08	3.29
		27°C	9.54	7.20	2.71	9.20	7.04	2.72	8.85	6.87	2.78	8.49	6.71	2.86	8.12	6.54	3.04	7.66	6.33	3.29
		30°C	9.59	8.42	2.71	9.24	8.24	2.72	8.91	8.06	2.78	8.56	7.87	2.86	8.21	7.66	3.04	7.78	7.39	3.30
		33°C	9.78	9.39	2.72	9.49	9.14	2.73	9.20	8.87	2.80	8.90	8.59	2.88	8.60	8.29	3.07	8.21	7.92	3.34
	22°C	27°C	10.44	5.84	2.74	10.07	5.70	2.76	9.69	5.55	2.83	9.30	5.40	2.91	8.90	5.25	3.10	8.41	5.05	3.36
		30°C	10.47	7.17	2.75	10.09	7.01	2.76	9.71	6.85	2.83	9.33	6.69	2.91	8.93	6.52	3.10	8.43	6.32	3.36
		33°C	10.50	8.41	2.75	10.12	8.24	2.77	9.74	8.08	2.83	9.35	7.92	2.91	8.96	7.75	3.10	8.47	7.52	3.36
		36°C	10.57	9.57	2.75	10.20	9.37	2.77	9.85	9.18	2.84	9.49	8.96	2.92	9.14	8.71	3.11	8.71	8.38	3.39
900	16°C	21°C	8.75	6.07	2.68	8.43	5.91	2.68	8.10	5.75	2.74	7.77	5.58	2.81	7.42	5.41	2.99	6.99	5.19	3.24
		24°C	8.78	7.37	2.68	8.46	7.20	2.69	8.14	7.03	2.74	7.80	6.85	2.81	7.46	6.67	2.99	7.04	6.42	3.24
		27°C	8.89	8.51	2.68	8.59	8.29	2.69	8.30	8.06	2.75	8.01	7.81	2.82	7.71	7.53	3.01	7.35	7.17	3.27
		30°C	9.34	9.13	2.70	9.07	8.86	2.71	8.79	8.59	2.77	8.50	8.30	2.86	8.20	8.00	3.04	7.83	7.63	3.31
	19°C	24°C	9.62	6.05	2.71	9.28	5.89	2.72	8.92	5.73	2.78	8.56	5.57	2.86	8.19	5.40	3.04	7.72	5.20	3.30
		27°C	9.66	7.38	2.71	9.31	7.21	2.72	8.95	7.04	2.78	8.59	6.87	2.86	8.22	6.69	3.04	7.75	6.47	3.30
		30°C	9.70	8.63	2.71	9.35	8.44	2.73	9.01	8.26	2.79	8.67	8.06	2.87	8.31	7.84	3.05	7.88	7.55	3.31
		33°C	9.90	9.62	2.72	9.60	9.36	2.74	9.31	9.09	2.80	9.01	8.79	2.89	8.70	8.49	3.08	8.31	8.10	3.35
	22°C	27°C	10.56	5.99	2.75	10.19	5.84	2.77	9.80	5.69	2.83	9.41	5.53	2.92	9.01	5.37	3.10	8.50	5.17	3.36
		30°C	10.59	7.34	2.75	10.21	7.18	2.77	9.83	7.02	2.83	9.44	6.85	2.92	9.03	6.68	3.10	8.53	6.46	3.37
		33°C	10.62	8.61	2.75	10.24	8.45	2.77	9.86	8.28	2.84	9.46	8.11	2.92	9.07	7.93	3.11	8.57	7.69	3.37
		36°C	10.69	9.80	2.76	10.32	9.60	2.78	9.96	9.40	2.84	9.61	9.17	2.93	9.24	8.92	3.12	8.81	8.57	3.39

Model: ACC38C - ALC~~35C~~ 35D
Cooling Mode

AFR (CFM)	EWB	EDB	Outdoor temperature																	
			19°C			25°C			30°C			35°C			40°C			46°C		
			TC	SHC	PI	TC	SHC	PI	TC	SHC	PI	TC	SHC	PI	TC	SHC	PI	TC	SHC	PI
1350	16°C	21°C	10.00	6.54	3.19	9.63	6.38	3.20	9.27	6.21	3.26	8.89	6.04	3.35	8.49	5.86	3.56	7.99	5.64	3.87
		24°C	10.04	7.94	3.19	9.67	7.77	3.20	9.31	7.59	3.27	8.93	7.41	3.35	8.54	7.22	3.57	8.05	6.98	3.87
		27°C	10.16	9.18	3.20	9.83	8.95	3.21	9.50	8.71	3.28	9.16	8.45	3.37	8.83	8.16	3.59	8.41	7.78	3.90
		30°C	10.68	9.84	3.22	10.37	9.56	3.24	10.06	9.28	3.31	9.73	8.98	3.41	9.38	8.67	3.63	8.95	8.29	3.95
	19°C	24°C	11.00	6.52	3.23	10.61	6.36	3.25	10.21	6.20	3.32	9.80	6.03	3.41	9.37	5.86	3.63	8.83	5.65	3.94
		27°C	11.04	7.95	3.24	10.64	7.78	3.25	10.24	7.61	3.32	9.83	7.43	3.41	9.40	7.25	3.63	8.87	7.03	3.94
		30°C	11.09	9.30	3.24	10.69	9.11	3.25	10.31	8.92	3.32	9.91	8.72	3.42	9.51	8.50	3.64	9.01	8.20	3.95
		33°C	11.31	10.37	3.25	10.97	10.11	3.27	10.64	9.82	3.34	10.31	9.51	3.45	9.95	9.20	3.67	9.51	8.80	4.00
	22°C	27°C	12.07	6.46	3.28	11.65	6.30	3.30	11.21	6.15	3.38	10.77	5.98	3.48	10.31	5.82	3.70	9.73	5.61	4.01
		30°C	12.10	7.92	3.28	11.67	7.75	3.30	11.24	7.58	3.38	10.80	7.41	3.48	10.33	7.24	3.70	9.76	7.02	4.02
		33°C	12.14	9.29	3.28	11.71	9.12	3.31	11.27	8.95	3.38	10.83	8.77	3.48	10.37	8.59	3.71	9.81	8.35	4.02
		36°C	12.22	10.57	3.29	11.80	10.36	3.31	11.40	10.16	3.39	10.99	9.93	3.49	10.58	9.66	3.72	10.08	9.31	4.05
1420	16°C	21°C	10.26	6.89	3.21	9.88	6.72	3.22	9.50	6.54	3.28	9.11	6.35	3.37	8.70	6.16	3.58	8.20	5.92	3.89
		24°C	10.30	8.37	3.21	9.92	8.18	3.22	9.54	8.00	3.28	9.15	7.80	3.37	8.75	7.60	3.59	8.25	7.33	3.89
		27°C	10.42	9.67	3.21	10.08	9.43	3.23	9.74	9.17	3.29	9.39	8.89	3.39	9.05	8.58	3.61	8.62	8.18	3.92
		30°C	10.96	10.37	3.24	10.64	10.07	3.25	10.31	9.77	3.33	9.97	9.45	3.42	9.62	9.12	3.65	9.18	8.71	3.97
	19°C	24°C	11.29	6.87	3.25	10.88	6.70	3.26	10.47	6.52	3.33	10.04	6.34	3.43	9.60	6.16	3.65	9.06	5.93	3.96
		27°C	11.32	8.38	3.25	10.91	8.19	3.27	10.50	8.01	3.34	10.08	7.82	3.43	9.64	7.63	3.65	9.09	7.39	3.96
		30°C	11.37	9.80	3.25	10.97	9.60	3.27	10.57	9.40	3.34	10.16	9.17	3.44	9.75	8.94	3.66	9.24	8.62	3.97
		33°C	11.60	10.93	3.26	11.26	10.64	3.28	10.92	10.34	3.36	10.57	10.01	3.46	10.20	9.67	3.69	9.75	9.25	4.02
	22°C	27°C	12.39	6.80	3.30	11.95	6.64	3.32	11.50	6.47	3.40	11.04	6.30	3.49	10.56	6.12	3.72	9.98	5.90	4.03
		30°C	12.42	8.34	3.30	11.98	8.16	3.32	11.53	7.98	3.40	11.07	7.80	3.50	10.59	7.61	3.72	10.00	7.38	4.04
		33°C	12.45	9.79	3.30	12.01	9.60	3.32	11.56	9.42	3.40	11.10	9.23	3.50	10.63	9.03	3.73	10.05	8.78	4.04
		36°C	12.54	11.14	3.30	12.11	10.92	3.33	11.69	10.69	3.41	11.26	10.44	3.51	10.84	10.16	3.74	10.34	9.78	4.07
1470	16°C	21°C	10.44	7.15	3.22	10.06	6.97	3.23	9.67	6.78	3.29	9.27	6.58	3.38	8.86	6.38	3.60	8.34	6.13	3.90
		24°C	10.49	8.68	3.22	10.10	8.48	3.23	9.71	8.29	3.30	9.32	8.08	3.38	8.91	7.87	3.60	8.40	7.59	3.90
		27°C	10.61	10.03	3.23	10.26	9.78	3.24	9.91	9.51	3.31	9.56	9.21	3.40	9.21	8.89	3.62	8.77	8.46	3.93
		30°C	11.15	10.76	3.25	10.83	10.44	3.27	10.50	10.12	3.34	10.15	9.79	3.44	9.79	9.45	3.66	9.34	9.01	3.98
	19°C	24°C	11.49	7.13	3.26	11.07	6.94	3.28	10.65	6.76	3.35	10.22	6.57	3.44	9.77	6.38	3.66	9.22	6.14	3.97
		27°C	11.53	8.69	3.26	11.11	8.50	3.28	10.69	8.30	3.35	10.26	8.10	3.44	9.81	7.90	3.66	9.25	7.64	3.97
		30°C	11.58	10.17	3.27	11.16	9.95	3.28	10.76	9.74	3.35	10.34	9.50	3.45	9.92	9.25	3.67	9.40	8.92	3.99
		33°C	11.81	11.33	3.28	11.46	11.04	3.30	11.11	10.72	3.37	10.75	10.37	3.48	10.38	10.02	3.71	9.92	9.57	4.03
	22°C	27°C	12.61	7.06	3.31	12.16	6.88	3.33	11.70	6.71	3.41	11.24	6.52	3.51	10.75	6.34	3.73	10.15	6.10	4.05
		30°C	12.64	8.66	3.31	12.19	8.46	3.33	11.73	8.27	3.41	11.26	8.08	3.51	10.78	7.88	3.74	10.18	7.63	4.05
		33°C	12.68	10.15	3.31	12.22	9.96	3.34	11.77	9.76	3.41	11.30	9.56	3.51	10.82	9.35	3.74	10.23	9.08	4.06
		36°C	12.76	11.55	3.32	12.32	11.32	3.34	11.90	11.08	3.42	11.46	10.82	3.52	11.04	10.52	3.76	10.52	10.12	4.08
1540	16°C	21°C	10.56	7.33	3.23	10.18	7.14	3.24	9.79	6.94	3.30	9.38	6.74	3.39	8.96	6.53	3.60	8.44	6.27	3.91
		24°C	10.61	8.90	3.23	10.22	8.69	3.24	9.83	8.49	3.30	9.43	8.27	3.39	9.01	8.05	3.61	8.50	7.76	3.91
		27°C	10.73	10.28	3.23	10.38	10.02	3.25	10.03	9.74	3.31	9.67	9.43	3.41	9.32	9.09	3.63	8.88	8.66	3.94
		30°C	11.28	11.02	3.25	10.95	10.70	3.27	10.62	10.37	3.35	10.27	10.02	3.44	9.91	9.67	3.67	9.45	9.22	3.99
	19°C	24°C	11.62	7.30	3.27	11.20	7.11	3.28	10.78	6.92	3.35	10.34	6.73	3.45	9.89	6.53	3.67	9.33	6.28	3.98
		27°C	11.66	8.91	3.27	11.24	8.70	3.29	10.81	8.50	3.36	10.38	8.29	3.45	9.92	8.08	3.67	9.36	7.82	3.98
		30°C	11.71	10.42	3.27	11.29	10.20	3.29	10.88	9.97	3.36	10.47	9.73	3.46	10.03	9.47	3.68	9.51	9.12	3.99
		33°C	11.95	11.61	3.28	11.59	11.31	3.30	11.24	10.97	3.38	10.88	10.62	3.48	10.51	10.25	3.71	10.04	9.79	4.04
	22°C	27°C	12.76	7.23	3.32	12.30	7.05	3.34	11.84	6.87	3.42	11.37	6.68	3.52	10.88	6.48	3.74	10.27	6.24	4.06
		30°C	12.79	8.87	3.32	12.33	8.67	3.34	11.87	8.47	3.42	11.40	8.27	3.52	10.91	8.06	3.74	10.30	7.81	4.06
		33°C	12.83	10.40	3.32	12.37	10.20	3.34	11.90	10.00	3.42	11.43	9.79	3.52	10.95	9.57	3.75	10.35	9.29	4.06
		36°C	12.91	11.84	3.32	12.47	11.60	3.35	12.03	11.35	3.43	11.60	11.08	3.53	11.16	10.77	3.76	10.64	10.35	4.09

Remark:
AFR: Air flow rate (CFM)
EWB: Entering Wet Bulb Temp. (˚C)
EDB: Entering Dry Bulb Temp. (˚C)
TC: Total Cooling Capacity (kW)
SHC: Sensible Heat Capacity (kW)
PI: Power Input

Notes:
1. Ratings shown are gross capacities which do not include a deduction for indoor fan motor heat.
2. shows nominal capacities.
3. Direct interpolation is permissible. Do not extrapolate.

Model: ACC38C - ALC~~40C~~ 40D
Cooling Mode

AFR (CFM)	EWB	EDB	Outdoor temperature																	
			19°C			25°C			30°C			35°C			40°C			46°C		
			TC	SHC	PI	TC	SHC	PI	TC	SHC	PI	TC	SHC	PI	TC	SHC	PI	TC	SHC	PI
1350	16°C	21°C	10.85	7.11	3.44	10.46	6.92	3.44	10.06	6.74	3.51	9.65	6.56	3.61	9.22	6.36	3.84	8.68	6.12	4.16
		24°C	10.90	8.63	3.44	10.50	8.43	3.45	10.10	8.25	3.52	9.69	8.05	3.61	9.27	7.84	3.84	8.74	7.58	4.17
		27°C	11.03	9.97	3.44	10.67	9.72	3.45	10.31	9.46	3.53	9.95	9.18	3.63	9.58	8.86	3.86	9.13	8.45	4.20
		30°C	11.59	10.69	3.47	11.26	10.38	3.48	10.92	10.07	3.56	10.56	9.75	3.67	10.19	9.42	3.91	9.72	9.00	4.25
	19°C	24°C	11.94	7.08	3.48	11.52	6.90	3.50	11.08	6.73	3.57	10.64	6.55	3.67	10.17	6.36	3.91	9.59	6.13	4.24
		27°C	11.98	8.64	3.48	11.55	8.45	3.50	11.12	8.26	3.57	10.67	8.07	3.67	10.21	7.87	3.91	9.63	7.63	4.24
		30°C	12.04	10.10	3.48	11.61	9.90	3.50	11.19	9.69	3.58	10.76	9.47	3.68	10.32	9.23	3.92	9.78	8.91	4.25
		33°C	12.28	11.26	3.49	11.91	10.97	3.52	11.56	10.66	3.60	11.19	10.33	3.71	10.81	9.99	3.95	10.32	9.56	4.30
	22°C	27°C	13.11	7.01	3.53	12.64	6.84	3.55	12.18	6.67	3.64	11.69	6.50	3.74	11.19	6.32	3.98	10.56	6.10	4.32
		30°C	13.14	8.60	3.53	12.68	8.41	3.56	12.21	8.23	3.64	11.72	8.05	3.74	11.22	7.86	3.99	10.60	7.62	4.32
		33°C	13.18	10.08	3.54	12.71	9.90	3.56	12.24	9.71	3.64	11.76	9.52	3.75	11.26	9.33	3.99	10.65	9.07	4.33
		36°C	13.27	11.48	3.54	12.82	11.25	3.56	12.37	11.03	3.65	11.93	10.78	3.76	11.48	10.49	4.01	10.95	10.10	4.36
1420	16°C	21°C	11.14	7.49	3.45	10.73	7.29	3.46	10.32	7.10	3.53	9.89	6.90	3.63	9.45	6.69	3.86	8.90	6.43	4.18
		24°C	11.18	9.09	3.46	10.77	8.88	3.46	10.36	8.68	3.53	9.94	8.47	3.63	9.50	8.25	3.86	8.96	7.96	4.19
		27°C	11.32	10.50	3.46	10.94	10.24	3.47	10.58	9.96	3.55	10.20	9.66	3.65	9.82	9.32	3.88	9.36	8.88	4.22
		30°C	11.90	11.26	3.48	11.55	10.93	3.50	11.20	10.60	3.58	10.83	10.26	3.69	10.45	9.90	3.93	9.97	9.46	4.27
	19°C	24°C	12.25	7.46	3.50	11.81	7.27	3.51	11.37	7.08	3.59	10.91	6.89	3.69	10.43	6.69	3.93	9.83	6.44	4.26
		27°C	12.30	9.10	3.50	11.85	8.90	3.52	11.40	8.70	3.59	10.94	8.49	3.69	10.46	8.28	3.93	9.87	8.02	4.26
		30°C	12.35	10.64	3.50	11.91	10.42	3.52	11.48	10.20	3.60	11.04	9.96	3.70	10.58	9.70	3.94	10.03	9.36	4.27
		33°C	12.60	11.86	3.51	12.22	11.56	3.53	11.85	11.23	3.62	11.47	10.87	3.73	11.08	10.50	3.98	10.58	10.04	4.32
	22°C	27°C	13.45	7.39	3.55	12.97	7.21	3.57	12.49	7.02	3.66	11.99	6.84	3.76	11.47	6.64	4.00	10.83	6.40	4.34
		30°C	13.48	9.06	3.55	13.00	8.86	3.57	12.52	8.67	3.66	12.02	8.47	3.76	11.50	8.26	4.01	10.86	8.01	4.35
		33°C	13.52	10.62	3.55	13.04	10.42	3.58	12.55	10.23	3.66	12.05	10.02	3.77	11.54	9.81	4.01	10.92	9.53	4.35
		36°C	13.61	12.09	3.56	13.15	11.85	3.58	12.69	11.61	3.67	12.23	11.34	3.78	11.77	11.03	4.03	11.22	10.61	4.38
1470	16°C	21°C	11.34	7.77	3.47	10.92	7.56	3.48	10.50	7.36	3.54	10.07	7.15	3.64	9.62	6.93	3.87	9.06	6.65	4.20
		24°C	11.39	9.43	3.47	10.96	9.21	3.48	10.55	9.00	3.55	10.11	8.77	3.64	9.67	8.54	3.87	9.12	8.24	4.20
		27°C	11.52	10.89	3.47	11.14	10.62	3.49	10.76	10.32	3.56	10.38	10.00	3.66	10.00	9.65	3.90	9.52	9.19	4.23
		30°C	12.11	11.68	3.50	11.76	11.34	3.51	11.40	10.99	3.59	11.02	10.63	3.70	10.63	10.26	3.94	10.14	9.79	4.29
	19°C	24°C	12.47	7.74	3.51	12.02	7.54	3.53	11.57	7.34	3.60	11.10	7.14	3.70	10.61	6.93	3.94	10.01	6.67	4.27
		27°C	12.52	9.44	3.51	12.06	9.23	3.53	11.61	9.02	3.61	11.14	8.80	3.71	10.65	8.57	3.94	10.04	8.30	4.28
		30°C	12.57	11.04	3.51	12.12	10.81	3.53	11.68	10.57	3.61	11.23	10.32	3.71	10.77	10.05	3.95	10.21	9.69	4.29
		33°C	12.83	12.31	3.53	12.44	11.98	3.55	12.06	11.64	3.63	11.68	11.26	3.74	11.27	10.88	3.99	10.77	10.39	4.34
	22°C	27°C	13.69	7.66	3.56	13.20	7.47	3.59	12.71	7.28	3.67	12.20	7.08	3.78	11.68	6.88	4.02	11.02	6.63	4.36
		30°C	13.73	9.40	3.56	13.23	9.19	3.59	12.74	8.98	3.67	12.23	8.77	3.78	11.71	8.56	4.02	11.05	8.29	4.36
		33°C	13.77	11.02	3.57	13.27	10.81	3.59	12.78	10.60	3.67	12.27	10.38	3.78	11.75	10.16	4.03	11.11	9.86	4.37
		36°C	13.86	12.54	3.57	13.38	12.29	3.60	12.92	12.03	3.68	12.45	11.75	3.79	11.98	11.42	4.04	11.42	10.98	4.39
1540	16°C	21°C	11.47	7.96	3.47	11.05	7.75	3.48	10.62	7.54	3.55	10.19	7.32	3.65	9.73	7.09	3.88	9.16	6.80	4.21
		24°C	11.52	9.66	3.48	11.09	9.44	3.49	10.67	9.22	3.56	10.23	8.98	3.65	9.78	8.74	3.88	9.23	8.43	4.21
		27°C	11.65	11.16	3.48	11.27	10.88	3.49	10.89	10.57	3.57	10.50	10.24	3.67	10.12	9.87	3.91	9.64	9.40	4.24
		30°C	12.25	11.97	3.50	11.89	11.61	3.52	11.53	11.26	3.60	11.15	10.88	3.71	10.76	10.50	3.95	10.26	10.01	4.29
	19°C	24°C	12.62	7.93	3.52	12.16	7.72	3.53	11.70	7.52	3.61	11.23	7.31	3.71	10.74	7.09	3.95	10.13	6.82	4.28
		27°C	12.66	9.67	3.52	12.20	9.45	3.54	11.74	9.23	3.61	11.27	9.01	3.71	10.77	8.78	3.95	10.16	8.49	4.29
		30°C	12.72	11.31	3.52	12.26	11.07	3.54	11.82	10.83	3.62	11.36	10.56	3.72	10.90	10.28	3.96	10.33	9.91	4.30
		33°C	12.98	12.61	3.53	12.59	12.28	3.56	12.20	11.92	3.64	11.81	11.53	3.75	11.41	11.13	4.00	10.90	10.63	4.35
	22°C	27°C	13.85	7.85	3.57	13.36	7.66	3.59	12.86	7.46	3.68	12.34	7.25	3.78	11.81	7.04	4.03	11.15	6.78	4.37
		30°C	13.89	9.63	3.57	13.39	9.42	3.60	12.89	9.20	3.68	12.38	8.98	3.79	11.84	8.76	4.03	11.18	8.48	4.37
		33°C	13.93	11.29	3.57	13.43	11.07	3.60	12.92	10.86	3.68	12.41	10.63	3.79	11.89	10.39	4.03	11.24	10.09	4.38
		36°C	14.02	12.85	3.58	13.54	12.59	3.60	13.07	12.32	3.69	12.60	12.03	3.80	12.12	11.69	4.05	11.56	11.24	4.40

Model: ACC38C - ALC~~40C~~ (3 Phase)
Cooling Mode 40D

AFR (CFM)	EWB	EDB	Outdoor temperature																	
			19°C			25°C			30°C			35°C			40°C			46°C		
			TC	SHC	PI	TC	SHC	PI	TC	SHC	PI	TC	SHC	PI	TC	SHC	PI	TC	SHC	PI
1350	16°C	21°C	10.85	7.11	3.39	10.46	6.92	3.40	10.06	6.74	3.47	9.65	6.56	3.56	9.22	6.36	3.78	8.68	6.12	4.11
		24°C	10.90	8.63	3.39	10.50	8.43	3.40	10.10	8.25	3.47	9.69	8.05	3.56	9.27	7.84	3.79	8.74	7.58	4.11
		27°C	11.03	9.97	3.40	10.67	9.72	3.41	10.31	9.46	3.48	9.95	9.18	3.58	9.58	8.86	3.81	9.13	8.45	4.14
		30°C	11.59	10.69	3.42	11.26	10.38	3.44	10.92	10.07	3.51	10.56	9.75	3.62	10.19	9.42	3.86	9.72	9.00	4.19
	19°C	24°C	11.94	7.08	3.43	11.52	6.90	3.45	11.08	6.73	3.52	10.64	6.55	3.62	10.17	6.36	3.85	9.59	6.13	4.18
		27°C	11.98	8.64	3.44	11.55	8.45	3.45	11.12	8.26	3.52	10.67	8.07	3.62	10.21	7.87	3.86	9.63	7.63	4.18
		30°C	12.04	10.10	3.44	11.61	9.90	3.45	11.19	9.69	3.53	10.76	9.47	3.63	10.32	9.23	3.86	9.78	8.91	4.20
		33°C	12.28	11.26	3.45	11.91	10.97	3.47	11.56	10.66	3.55	11.19	10.33	3.66	10.81	9.99	3.90	10.32	9.56	4.24
	22°C	27°C	13.11	7.01	3.48	12.64	6.84	3.51	12.18	6.67	3.59	11.69	6.50	3.69	11.19	6.32	3.93	10.56	6.10	4.26
		30°C	13.14	8.60	3.49	12.68	8.41	3.51	12.21	8.23	3.59	11.72	8.05	3.69	11.22	7.86	3.93	10.60	7.62	4.26
		33°C	13.18	10.08	3.49	12.71	9.90	3.51	12.24	9.71	3.59	11.76	9.52	3.70	11.26	9.33	3.94	10.65	9.07	4.27
		36°C	13.27	11.48	3.49	12.82	11.25	3.52	12.37	11.03	3.60	11.93	10.78	3.71	11.48	10.49	3.95	10.95	10.10	4.30
1420	16°C	21°C	11.14	7.49	3.41	10.73	7.29	3.42	10.32	7.10	3.48	9.89	6.90	3.58	9.45	6.69	3.80	8.90	6.43	4.13
		24°C	11.18	9.09	3.41	10.77	8.88	3.42	10.36	8.68	3.49	9.94	8.47	3.58	9.50	8.25	3.81	8.96	7.96	4.13
		27°C	11.32	10.50	3.41	10.94	10.24	3.43	10.58	9.96	3.50	10.20	9.66	3.60	9.82	9.32	3.83	9.36	8.88	4.16
		30°C	11.90	11.26	3.44	11.55	10.93	3.45	11.20	10.60	3.53	10.83	10.26	3.64	10.45	9.90	3.88	9.97	9.46	4.21
	19°C	24°C	12.25	7.46	3.45	11.81	7.27	3.47	11.37	7.08	3.54	10.91	6.89	3.64	10.43	6.69	3.87	9.83	6.44	4.20
		27°C	12.30	9.10	3.45	11.85	8.90	3.47	11.40	8.70	3.54	10.94	8.49	3.64	10.46	8.28	3.88	9.87	8.02	4.20
		30°C	12.35	10.64	3.45	11.91	10.42	3.47	11.48	10.20	3.55	11.04	9.96	3.65	10.58	9.70	3.88	10.03	9.36	4.22
		33°C	12.60	11.86	3.47	12.22	11.56	3.49	11.85	11.23	3.57	11.47	10.87	3.68	11.08	10.50	3.92	10.58	10.04	4.26
	22°C	27°C	13.45	7.39	3.50	12.97	7.21	3.52	12.49	7.02	3.61	11.99	6.84	3.71	11.47	6.64	3.95	10.83	6.40	4.28
		30°C	13.48	9.06	3.50	13.00	8.86	3.53	12.52	8.67	3.61	12.02	8.47	3.71	11.50	8.26	3.95	10.86	8.01	4.29
		33°C	13.52	10.62	3.50	13.04	10.42	3.53	12.55	10.23	3.61	12.05	10.02	3.72	11.54	9.81	3.96	10.92	9.53	4.29
		36°C	13.61	12.09	3.51	13.15	11.85	3.53	12.69	11.61	3.62	12.23	11.34	3.73	11.77	11.03	3.97	11.22	10.61	4.32
1470	16°C	21°C	11.34	7.77	3.42	10.92	7.56	3.43	10.50	7.36	3.50	10.07	7.15	3.59	9.62	6.93	3.82	9.06	6.65	4.14
		24°C	11.39	9.43	3.42	10.96	9.21	3.43	10.55	9.00	3.50	10.11	8.77	3.59	9.67	8.54	3.82	9.12	8.24	4.14
		27°C	11.52	10.89	3.43	11.14	10.62	3.44	10.76	10.32	3.51	10.38	10.00	3.61	10.00	9.65	3.84	9.52	9.19	4.18
		30°C	12.11	11.68	3.45	11.76	11.34	3.47	11.40	10.99	3.54	11.02	10.63	3.65	10.63	10.26	3.89	10.14	9.79	4.23
	19°C	24°C	12.47	7.74	3.46	12.02	7.54	3.48	11.57	7.34	3.55	11.10	7.14	3.65	10.61	6.93	3.89	10.01	6.67	4.22
		27°C	12.52	9.44	3.46	12.06	9.23	3.48	11.61	9.02	3.56	11.14	8.80	3.66	10.65	8.57	3.89	10.04	8.30	4.22
		30°C	12.57	11.04	3.47	12.12	10.81	3.48	11.68	10.57	3.56	11.23	10.32	3.66	10.77	10.05	3.90	10.21	9.69	4.23
		33°C	12.83	12.31	3.48	12.44	11.98	3.50	12.06	11.64	3.58	11.68	11.26	3.69	11.27	10.88	3.94	10.77	10.39	4.28
	22°C	27°C	13.69	7.66	3.51	13.20	7.47	3.54	12.71	7.28	3.62	12.20	7.08	3.72	11.68	6.88	3.96	11.02	6.63	4.30
		30°C	13.73	9.40	3.52	13.23	9.19	3.54	12.74	8.98	3.62	12.23	8.77	3.73	11.71	8.56	3.97	11.05	8.29	4.30
		33°C	13.77	11.02	3.52	13.27	10.81	3.54	12.78	10.60	3.62	12.27	10.38	3.73	11.75	10.16	3.97	11.11	9.86	4.31
		36°C	13.86	12.54	3.52	13.38	12.29	3.55	12.92	12.03	3.63	12.45	11.75	3.74	11.98	11.42	3.99	11.42	10.98	4.34
1540	16°C	21°C	11.47	7.96	3.43	11.05	7.75	3.44	10.62	7.54	3.50	10.19	7.32	3.60	9.73	7.09	3.83	9.16	6.80	4.15
		24°C	11.52	9.66	3.43	11.09	9.44	3.44	10.67	9.22	3.51	10.23	8.98	3.60	9.78	8.74	3.83	9.23	8.43	4.15
		27°C	11.65	11.16	3.43	11.27	10.88	3.45	10.89	10.57	3.52	10.50	10.24	3.62	10.12	9.87	3.85	9.64	9.40	4.19
		30°C	12.25	11.97	3.46	11.89	11.61	3.47	11.53	11.26	3.55	11.15	10.88	3.66	10.76	10.50	3.90	10.26	10.01	4.24
	19°C	24°C	12.62	7.93	3.47	12.16	7.72	3.49	11.70	7.52	3.56	11.23	7.31	3.66	10.74	7.09	3.90	10.13	6.82	4.22
		27°C	12.66	9.67	3.47	12.20	9.45	3.49	11.74	9.23	3.56	11.27	9.01	3.66	10.77	8.78	3.90	10.16	8.49	4.23
		30°C	12.72	11.31	3.47	12.26	11.07	3.49	11.82	10.83	3.57	11.36	10.56	3.67	10.90	10.28	3.91	10.33	9.91	4.24
		33°C	12.98	12.61	3.49	12.59	12.28	3.51	12.20	11.92	3.59	11.81	11.53	3.70	11.41	11.13	3.94	10.90	10.63	4.29
	22°C	27°C	13.85	7.85	3.52	13.36	7.66	3.55	12.86	7.46	3.63	12.34	7.25	3.73	11.81	7.04	3.97	11.15	6.78	4.31
		30°C	13.89	9.63	3.52	13.39	9.42	3.55	12.89	9.20	3.63	12.38	8.98	3.74	11.84	8.76	3.98	11.18	8.48	4.31
		33°C	13.93	11.29	3.53	13.43	11.07	3.55	12.92	10.86	3.63	12.41	10.63	3.74	11.89	10.39	3.98	11.24	10.09	4.32
		36°C	14.02	12.85	3.53	13.54	12.59	3.56	13.07	12.32	3.64	12.60	12.03	3.75	12.12	11.69	4.00	11.56	11.24	4.34

Remark:
AFR: Air flow rate (CFM)
EWB: Entering Wet Bulb Temp. (˚C)
EDB: Entering Dry Bulb Temp. (˚C)
TC: Total Cooling Capacity (kW)
SHC: Sensible Heat Capacity (kW)
PI: Power Input

Notes:
1. Ratings shown are gross capacities which do not include a deduction for indoor fan motor heat.
2. shows nominal capacities.
3. Direct interpolation is permissible. Do not extrapolate.

Model: ACC40C - ALC~~35C~~ 35D
Cooling Mode

AFR (CFM)	EWB	EDB	Outdoor temperature																	
			19°C			25°C			30°C			35°C			40°C			46°C		
			TC	SHC	PI	TC	SHC	PI	TC	SHC	PI	TC	SHC	PI	TC	SHC	PI	TC	SHC	PI
900	16°C	21°C	9.56	6.50	3.16	9.21	6.33	3.16	8.86	6.17	3.23	8.50	6.00	3.31	8.12	5.82	3.52	7.65	5.60	3.82
		24°C	9.60	7.89	3.16	9.25	7.71	3.17	8.90	7.54	3.23	8.54	7.36	3.32	8.16	7.17	3.53	7.70	6.93	3.83
		27°C	9.71	9.11	3.16	9.40	8.89	3.17	9.09	8.65	3.24	8.76	8.39	3.33	8.44	8.10	3.55	8.04	7.73	3.86
		30°C	10.21	9.77	3.18	9.92	9.49	3.20	9.62	9.21	3.27	9.31	8.92	3.37	8.98	8.61	3.59	8.56	8.23	3.90
	19°C	24°C	10.52	6.47	3.20	10.14	6.31	3.21	9.76	6.15	3.28	9.37	5.99	3.37	8.96	5.82	3.59	8.45	5.61	3.89
		27°C	10.56	7.90	3.20	10.18	7.72	3.21	9.80	7.55	3.28	9.40	7.38	3.37	8.99	7.20	3.59	8.48	6.98	3.90
		30°C	10.60	9.23	3.20	10.23	9.05	3.22	9.86	8.86	3.29	9.48	8.66	3.38	9.09	8.44	3.60	8.62	8.15	3.91
		33°C	10.82	10.30	3.21	10.50	10.03	3.23	10.18	9.75	3.31	9.86	9.45	3.41	9.52	9.13	3.63	9.09	8.74	3.95
	22°C	27°C	11.55	6.41	3.24	11.14	6.26	3.27	10.73	6.10	3.34	10.30	5.94	3.44	9.86	5.78	3.66	9.31	5.57	3.97
		30°C	11.58	7.86	3.25	11.17	7.69	3.27	10.75	7.53	3.34	10.33	7.36	3.44	9.88	7.18	3.66	9.33	6.97	3.97
		33°C	11.61	9.22	3.25	11.20	9.05	3.27	10.78	8.88	3.35	10.36	8.71	3.44	9.92	8.53	3.67	9.38	8.29	3.98
		36°C	11.69	10.49	3.25	11.29	10.29	3.27	10.90	10.08	3.35	10.51	9.85	3.45	10.12	9.59	3.68	9.64	9.24	4.00
990	16°C	21°C	9.81	6.85	3.17	9.45	6.67	3.18	9.09	6.49	3.24	8.71	6.31	3.33	8.33	6.12	3.54	7.84	5.88	3.84
		24°C	9.85	8.31	3.17	9.49	8.12	3.18	9.13	7.94	3.25	8.75	7.74	3.33	8.37	7.54	3.55	7.89	7.28	3.85
		27°C	9.97	9.60	3.18	9.64	9.36	3.19	9.32	9.11	3.26	8.99	8.83	3.35	8.65	8.52	3.57	8.25	8.12	3.88
		30°C	10.48	10.29	3.20	10.17	10.00	3.22	9.86	9.70	3.29	9.54	9.38	3.39	9.20	9.06	3.61	8.78	8.65	3.92
	19°C	24°C	10.79	6.82	3.21	10.41	6.65	3.23	10.01	6.48	3.30	9.61	6.30	3.39	9.18	6.12	3.61	8.66	5.89	3.91
		27°C	10.83	8.32	3.22	10.44	8.13	3.23	10.05	7.95	3.30	9.64	7.76	3.39	9.22	7.57	3.61	8.69	7.33	3.92
		30°C	10.88	9.73	3.22	10.49	9.53	3.23	10.11	9.33	3.30	9.72	9.11	3.40	9.32	8.87	3.62	8.84	8.56	3.93
		33°C	11.10	10.85	3.23	10.77	10.57	3.25	10.44	10.26	3.32	10.11	9.94	3.43	9.76	9.60	3.65	9.32	9.18	3.97
	22°C	27°C	11.85	6.75	3.26	11.43	6.59	3.28	11.00	6.42	3.36	10.56	6.25	3.46	10.11	6.07	3.68	9.54	5.86	3.99
		30°C	11.88	8.28	3.26	11.45	8.10	3.28	11.03	7.93	3.36	10.59	7.74	3.46	10.13	7.55	3.68	9.57	7.32	3.99
		33°C	11.91	9.72	3.26	11.49	9.53	3.29	11.06	9.35	3.36	10.62	9.16	3.46	10.17	8.97	3.68	9.62	8.71	4.00
		36°C	11.99	11.06	3.27	11.58	10.84	3.29	11.18	10.62	3.37	10.78	10.37	3.47	10.37	10.09	3.70	9.89	9.71	4.02
1060	16°C	21°C	9.99	7.10	3.18	9.62	6.92	3.19	9.25	6.73	3.26	8.87	6.54	3.34	8.47	6.34	3.56	7.98	6.08	3.86
		24°C	10.03	8.62	3.19	9.66	8.42	3.20	9.29	8.23	3.26	8.91	8.02	3.35	8.52	7.81	3.56	8.03	7.53	3.86
		27°C	10.15	9.96	3.19	9.81	9.71	3.20	9.48	9.44	3.27	9.14	9.14	3.36	8.81	8.81	3.58	8.39	8.39	3.89
		30°C	10.67	10.67	3.21	10.36	10.36	3.23	10.04	10.04	3.30	9.71	9.71	3.40	9.37	9.37	3.62	8.93	8.93	3.94
	19°C	24°C	10.99	7.08	3.23	10.59	6.89	3.24	10.19	6.71	3.31	9.78	6.53	3.40	9.35	6.33	3.62	8.81	6.10	3.93
		27°C	11.03	8.63	3.23	10.63	8.44	3.24	10.23	8.24	3.31	9.81	8.05	3.41	9.38	7.84	3.62	8.85	7.59	3.93
		30°C	11.08	10.09	3.23	10.68	9.88	3.25	10.29	9.67	3.32	9.89	9.44	3.41	9.49	9.19	3.63	8.99	8.86	3.94
		33°C	11.30	11.25	3.24	10.96	10.96	3.26	10.63	10.63	3.34	10.29	10.29	3.44	9.93	9.93	3.67	9.49	9.49	3.99
	22°C	27°C	12.06	7.01	3.27	11.63	6.84	3.30	11.20	6.66	3.37	10.75	6.48	3.47	10.29	6.29	3.69	9.71	6.06	4.00
		30°C	12.09	8.59	3.27	11.66	8.40	3.30	11.22	8.21	3.37	10.77	8.02	3.47	10.31	7.82	3.69	9.74	7.58	4.01
		33°C	12.13	10.08	3.28	11.69	9.89	3.30	11.25	9.69	3.38	10.81	9.49	3.47	10.35	9.29	3.70	9.79	9.02	4.01
		36°C	12.21	11.47	3.28	11.79	11.24	3.30	11.38	11.00	3.38	10.97	10.74	3.49	10.56	10.45	3.71	10.06	10.04	4.04
1100	16°C	21°C	10.10	7.28	3.19	9.73	7.08	3.20	9.36	6.89	3.26	8.97	6.69	3.35	8.57	6.49	3.56	8.07	6.22	3.86
		24°C	10.15	8.83	3.19	9.77	8.63	3.20	9.40	8.43	3.27	9.02	8.21	3.35	8.62	7.99	3.57	8.13	7.70	3.87
		27°C	10.27	10.21	3.20	9.93	9.93	3.21	9.59	9.59	3.28	9.25	9.25	3.37	8.91	8.91	3.59	8.49	8.49	3.90
		30°C	10.79	10.79	3.22	10.48	10.48	3.24	10.16	10.16	3.31	9.82	9.82	3.41	9.48	9.48	3.63	9.04	9.04	3.95
	19°C	24°C	11.12	7.25	3.23	10.72	7.06	3.25	10.31	6.87	3.32	9.89	6.68	3.41	9.46	6.48	3.63	8.92	6.23	3.93
		27°C	11.16	8.84	3.23	10.75	8.64	3.25	10.34	8.44	3.32	9.93	8.24	3.41	9.49	8.02	3.63	8.95	7.76	3.94
		30°C	11.21	10.34	3.24	10.80	10.12	3.25	10.41	9.90	3.32	10.01	9.66	3.42	9.60	9.40	3.64	9.10	9.06	3.95
		33°C	11.43	11.43	3.25	11.09	11.09	3.27	10.75	10.75	3.34	10.41	10.41	3.45	10.05	10.05	3.67	9.60	9.60	3.99
	22°C	27°C	12.20	7.18	3.28	11.77	7.00	3.30	11.33	6.82	3.38	10.87	6.63	3.48	10.41	6.44	3.70	9.82	6.20	4.01
		30°C	12.24	8.81	3.28	11.80	8.61	3.30	11.35	8.41	3.38	10.90	8.21	3.48	10.43	8.01	3.70	9.85	7.75	4.02
		33°C	12.27	10.33	3.28	11.83	10.13	3.31	11.39	9.93	3.38	10.93	9.72	3.48	10.47	9.50	3.71	9.90	9.22	4.02
		36°C	12.35	11.75	3.29	11.93	11.51	3.31	11.51	11.27	3.39	11.10	11.00	3.49	10.68	10.68	3.72	10.18	10.18	4.05

Model: ACC40C - ALC~~40C~~ 40D
Cooling Mode

AFR (CFM)	EWB	EDB	Outdoor temperature																	
			19°C			25°C			30°C			35°C			40°C			46°C		
			TC	SHC	PI	TC	SHC	PI	TC	SHC	PI	TC	SHC	PI	TC	SHC	PI	TC	SHC	PI
900	16°C	21°C	10.99	6.28	3.30	10.59	6.12	3.30	10.19	5.96	3.37	9.77	5.80	3.46	9.33	5.63	3.68	8.79	5.41	3.99
		24°C	11.04	7.63	3.30	10.63	7.46	3.31	10.23	7.29	3.37	9.81	7.12	3.46	9.38	6.94	3.68	8.85	6.70	4.00
		27°C	11.17	8.81	3.30	10.80	8.60	3.31	10.44	8.37	3.38	10.07	8.12	3.48	9.70	7.83	3.71	9.24	7.47	4.03
		30°C	11.74	9.45	3.32	11.40	9.18	3.34	11.05	8.91	3.42	10.70	8.62	3.52	10.32	8.33	3.75	9.84	7.96	4.08
	19°C	24°C	12.09	6.26	3.34	11.66	6.10	3.35	11.22	5.95	3.42	10.77	5.79	3.52	10.30	5.62	3.75	9.71	5.42	4.06
		27°C	12.13	7.64	3.34	11.70	7.47	3.36	11.26	7.31	3.43	10.81	7.14	3.52	10.33	6.96	3.75	9.75	6.75	4.07
		30°C	12.19	8.93	3.34	11.75	8.75	3.36	11.33	8.57	3.43	10.90	8.37	3.53	10.45	8.16	3.76	9.91	7.88	4.08
		33°C	12.43	9.96	3.35	12.06	9.70	3.37	11.70	9.43	3.45	11.33	9.14	3.56	10.94	8.83	3.79	10.45	8.45	4.13
	22°C	27°C	13.27	6.20	3.39	12.80	6.05	3.41	12.33	5.90	3.49	11.84	5.75	3.59	11.33	5.59	3.82	10.70	5.39	4.14
		30°C	13.31	7.60	3.39	12.83	7.44	3.41	12.36	7.28	3.49	11.87	7.12	3.59	11.36	6.95	3.82	10.73	6.74	4.15
		33°C	13.34	8.92	3.39	12.87	8.75	3.41	12.39	8.59	3.49	11.90	8.42	3.59	11.40	8.25	3.83	10.78	8.02	4.15
		36°C	13.43	10.15	3.39	12.98	9.95	3.42	12.53	9.75	3.50	12.08	9.53	3.61	11.63	9.28	3.84	11.08	8.93	4.18
990	16°C	21°C	11.28	6.62	3.31	10.86	6.45	3.32	10.45	6.28	3.39	10.02	6.10	3.48	9.57	5.92	3.70	9.01	5.69	4.01
		24°C	11.32	8.04	3.31	10.91	7.85	3.32	10.49	7.68	3.39	10.06	7.49	3.48	9.62	7.29	3.70	9.07	7.04	4.02
		27°C	11.46	9.29	3.32	11.08	9.05	3.33	10.71	8.81	3.40	10.33	8.54	3.50	9.95	8.24	3.73	9.48	7.85	4.05
		30°C	12.04	9.96	3.34	11.69	9.67	3.36	11.34	9.38	3.43	10.97	9.07	3.54	10.58	8.76	3.77	10.09	8.36	4.10
	19°C	24°C	12.41	6.60	3.36	11.96	6.43	3.37	11.51	6.26	3.44	11.04	6.09	3.54	10.56	5.91	3.77	9.96	5.70	4.08
		27°C	12.45	8.05	3.36	12.00	7.87	3.37	11.55	7.69	3.45	11.08	7.51	3.54	10.59	7.32	3.77	9.99	7.09	4.09
		30°C	12.50	9.41	3.36	12.06	9.22	3.38	11.62	9.02	3.45	11.17	8.81	3.55	10.71	8.58	3.78	10.16	8.28	4.10
		33°C	12.76	10.49	3.37	12.37	10.22	3.39	12.00	9.93	3.47	11.62	9.61	3.58	11.22	9.29	3.81	10.72	8.88	4.15
	22°C	27°C	13.62	6.53	3.40	13.13	6.37	3.43	12.64	6.21	3.51	12.14	6.05	3.61	11.61	5.87	3.84	10.97	5.66	4.17
		30°C	13.65	8.01	3.41	13.17	7.84	3.43	12.67	7.66	3.51	12.17	7.49	3.61	11.64	7.31	3.84	11.00	7.08	4.17
		33°C	13.69	9.40	3.41	13.20	9.22	3.43	12.71	9.04	3.51	12.20	8.86	3.61	11.69	8.67	3.85	11.05	8.43	4.17
		36°C	13.78	10.69	3.41	13.31	10.48	3.44	12.85	10.27	3.52	12.38	10.03	3.63	11.92	9.76	3.86	11.36	9.39	4.20
1060	16°C	21°C	11.48	6.87	3.32	11.06	6.69	3.33	10.63	6.51	3.40	10.19	6.32	3.49	9.74	6.13	3.71	9.17	5.88	4.03
		24°C	11.53	8.34	3.33	11.10	8.15	3.34	10.68	7.96	3.40	10.24	7.76	3.49	9.79	7.55	3.72	9.23	7.28	4.03
		27°C	11.66	9.63	3.33	11.28	9.39	3.34	10.90	9.13	3.41	10.51	8.85	3.51	10.12	8.53	3.74	9.64	8.13	4.06
		30°C	12.26	10.33	3.35	11.90	10.03	3.37	11.54	9.72	3.45	11.16	9.40	3.55	10.76	9.07	3.78	10.27	8.65	4.11
	19°C	24°C	12.63	6.84	3.37	12.17	6.67	3.38	11.71	6.49	3.46	11.24	6.31	3.55	10.74	6.12	3.78	10.13	5.89	4.10
		27°C	12.67	8.35	3.37	12.21	8.16	3.39	11.75	7.97	3.46	11.28	7.78	3.56	10.78	7.58	3.78	10.17	7.34	4.10
		30°C	12.73	9.76	3.37	12.27	9.56	3.39	11.83	9.35	3.46	11.37	9.13	3.56	10.90	8.89	3.79	10.33	8.57	4.11
		33°C	12.99	10.88	3.38	12.59	10.60	3.40	12.21	10.29	3.48	11.82	9.96	3.59	11.42	9.62	3.83	10.91	9.19	4.16
	22°C	27°C	13.86	6.78	3.42	13.37	6.61	3.44	12.87	6.44	3.52	12.35	6.26	3.62	11.82	6.08	3.85	11.16	5.86	4.18
		30°C	13.90	8.31	3.42	13.40	8.13	3.44	12.90	7.94	3.52	12.38	7.76	3.62	11.85	7.57	3.86	11.19	7.33	4.18
		33°C	13.94	9.75	3.42	13.44	9.56	3.44	12.94	9.37	3.52	12.42	9.18	3.63	11.90	8.98	3.86	11.25	8.72	4.19
		36°C	14.03	11.09	3.42	13.55	10.87	3.45	13.08	10.64	3.53	12.60	10.39	3.64	12.13	10.10	3.88	11.56	9.71	4.22
1100	16°C	21°C	11.61	7.04	3.33	11.19	6.85	3.34	10.76	6.67	3.41	10.31	6.47	3.50	9.85	6.27	3.72	9.28	6.02	4.04
		24°C	11.66	8.54	3.33	11.23	8.34	3.34	10.80	8.15	3.41	10.36	7.94	3.50	9.91	7.73	3.72	9.34	7.45	4.04
		27°C	11.80	9.87	3.34	11.41	9.62	3.35	11.03	9.35	3.42	10.63	9.06	3.52	10.24	8.73	3.75	9.76	8.31	4.07
		30°C	12.41	10.58	3.36	12.04	10.27	3.38	11.67	9.96	3.45	11.29	9.62	3.56	10.89	9.28	3.79	10.39	8.85	4.12
	19°C	24°C	12.78	7.01	3.38	12.32	6.83	3.39	11.85	6.65	3.46	11.37	6.46	3.56	10.87	6.27	3.79	10.25	6.03	4.11
		27°C	12.82	8.55	3.38	12.36	8.36	3.39	11.89	8.16	3.47	11.41	7.96	3.56	10.91	7.76	3.79	10.29	7.51	4.11
		30°C	12.88	10.00	3.38	12.41	9.79	3.40	11.96	9.58	3.47	11.51	9.34	3.57	11.03	9.09	3.80	10.46	8.76	4.12
		33°C	13.14	11.15	3.39	12.74	10.86	3.41	12.36	10.54	3.49	11.96	10.20	3.60	11.55	9.84	3.84	11.03	9.40	4.17
	22°C	27°C	14.03	6.94	3.42	13.52	6.77	3.45	13.02	6.59	3.53	12.50	6.41	3.63	11.96	6.23	3.86	11.29	5.99	4.19
		30°C	14.06	8.52	3.43	13.56	8.33	3.45	13.05	8.14	3.53	12.53	7.94	3.63	11.99	7.74	3.87	11.32	7.50	4.19
		33°C	14.10	9.99	3.43	13.60	9.79	3.45	13.09	9.60	3.53	12.57	9.40	3.64	12.04	9.19	3.87	11.38	8.92	4.20
		36°C	14.19	11.37	3.43	13.71	11.14	3.46	13.23	10.90	3.54	12.75	10.64	3.65	12.27	10.34	3.89	11.70	9.94	4.22

Remark:
AFR: Air flow rate (CFM)
EWB: Entering Wet Bulb Temp. (˚C)
EDB: Entering Dry Bulb Temp. (˚C)

TC: Total Cooling Capacity (kW)
SHC: Sensible Heat Capacity (kW)
PI: Power Input

Notes:
1. Ratings shown are gross capacities which do not include a deduction for indoor fan motor heat.
2. shows nominal capacities.
3. Direct interpolation is permissible. Do not extrapolate.

Model: ACC40C - ALC~~40C~~ (3 Phase)
Cooling Mode

40D

AFR (CFM)	EWB	EDB	Outdoor temperature																	
			19°C			25°C			30°C			35°C			40°C			46°C		
			TC	SHC	PI	TC	SHC	PI	TC	SHC	PI	TC	SHC	PI	TC	SHC	PI	TC	SHC	PI
900	16°C	21°C	10.99	6.28	3.25	10.59	6.12	3.26	10.19	5.96	3.32	9.77	5.80	3.41	9.33	5.63	3.63	8.79	5.41	3.94
		24°C	11.04	7.63	3.25	10.63	7.46	3.26	10.23	7.29	3.33	9.81	7.12	3.41	9.38	6.94	3.63	8.85	6.70	3.94
		27°C	11.17	8.81	3.26	10.80	8.60	3.27	10.44	8.37	3.34	10.07	8.12	3.43	9.70	7.83	3.65	9.24	7.47	3.97
		30°C	11.74	9.45	3.28	11.40	9.18	3.29	11.05	8.91	3.37	10.70	8.62	3.47	10.32	8.33	3.70	9.84	7.96	4.02
	19°C	24°C	12.09	6.26	3.29	11.66	6.10	3.31	11.22	5.95	3.38	10.77	5.79	3.47	10.30	5.62	3.69	9.71	5.42	4.01
		27°C	12.13	7.64	3.29	11.70	7.47	3.31	11.26	7.31	3.38	10.81	7.14	3.47	10.33	6.96	3.70	9.75	6.75	4.01
		30°C	12.19	8.93	3.30	11.75	8.75	3.31	11.33	8.57	3.38	10.90	8.37	3.48	10.45	8.16	3.70	9.91	7.88	4.02
		33°C	12.43	9.96	3.31	12.06	9.70	3.33	11.70	9.43	3.40	11.33	9.14	3.51	10.94	8.83	3.74	10.45	8.45	4.07
	22°C	27°C	13.27	6.20	3.34	12.80	6.05	3.36	12.33	5.90	3.44	11.84	5.75	3.54	11.33	5.59	3.77	10.70	5.39	4.09
		30°C	13.31	7.60	3.34	12.83	7.44	3.36	12.36	7.28	3.44	11.87	7.12	3.54	11.36	6.95	3.77	10.73	6.74	4.09
		33°C	13.34	8.92	3.34	12.87	8.75	3.37	12.39	8.59	3.44	11.90	8.42	3.54	11.40	8.25	3.77	10.78	8.02	4.09
		36°C	13.43	10.15	3.35	12.98	9.95	3.37	12.53	9.75	3.45	12.08	9.53	3.56	11.63	9.28	3.79	11.08	8.93	4.12
990	16°C	21°C	11.28	6.62	3.27	10.86	6.45	3.27	10.45	6.28	3.34	10.02	6.10	3.43	9.57	5.92	3.65	9.01	5.69	3.96
		24°C	11.32	8.04	3.27	10.91	7.85	3.28	10.49	7.68	3.34	10.06	7.49	3.43	9.62	7.29	3.65	9.07	7.04	3.96
		27°C	11.46	9.29	3.27	11.08	9.05	3.28	10.71	8.81	3.35	10.33	8.54	3.45	9.95	8.24	3.67	9.48	7.85	3.99
		30°C	12.04	9.96	3.29	11.69	9.67	3.31	11.34	9.38	3.39	10.97	9.07	3.49	10.58	8.76	3.72	10.09	8.36	4.04
	19°C	24°C	12.41	6.60	3.31	11.96	6.43	3.32	11.51	6.26	3.39	11.04	6.09	3.49	10.56	5.91	3.71	9.96	5.70	4.03
		27°C	12.45	8.05	3.31	12.00	7.87	3.33	11.55	7.69	3.40	11.08	7.51	3.49	10.59	7.32	3.72	9.99	7.09	4.03
		30°C	12.50	9.41	3.31	12.06	9.22	3.33	11.62	9.02	3.40	11.17	8.81	3.50	10.71	8.58	3.72	10.16	8.28	4.04
		33°C	12.76	10.49	3.32	12.37	10.22	3.34	12.00	9.93	3.42	11.62	9.61	3.53	11.22	9.29	3.76	10.72	8.88	4.09
	22°C	27°C	13.62	6.53	3.36	13.13	6.37	3.38	12.64	6.21	3.46	12.14	6.05	3.56	11.61	5.87	3.79	10.97	5.66	4.11
		30°C	13.65	8.01	3.36	13.17	7.84	3.38	12.67	7.66	3.46	12.17	7.49	3.56	11.64	7.31	3.79	11.00	7.08	4.11
		33°C	13.69	9.40	3.36	13.20	9.22	3.38	12.71	9.04	3.46	12.20	8.86	3.56	11.69	8.67	3.79	11.05	8.43	4.11
		36°C	13.78	10.69	3.36	13.31	10.48	3.39	12.85	10.27	3.47	12.38	10.03	3.57	11.92	9.76	3.81	11.36	9.39	4.14
1060	16°C	21°C	11.48	6.87	3.28	11.06	6.69	3.29	10.63	6.51	3.35	10.19	6.32	3.44	9.74	6.13	3.66	9.17	5.88	3.97
		24°C	11.53	8.34	3.28	11.10	8.15	3.29	10.68	7.96	3.35	10.24	7.76	3.44	9.79	7.55	3.66	9.23	7.28	3.97
		27°C	11.66	9.63	3.28	11.28	9.39	3.30	10.90	9.13	3.37	10.51	8.85	3.46	10.12	8.53	3.69	9.64	8.13	4.00
		30°C	12.26	10.33	3.31	11.90	10.03	3.32	11.54	9.72	3.40	11.16	9.40	3.50	10.76	9.07	3.73	10.27	8.65	4.05
	19°C	24°C	12.63	6.84	3.32	12.17	6.67	3.34	11.71	6.49	3.41	11.24	6.31	3.50	10.74	6.12	3.73	10.13	5.89	4.04
		27°C	12.67	8.35	3.32	12.21	8.16	3.34	11.75	7.97	3.41	11.28	7.78	3.51	10.78	7.58	3.73	10.17	7.34	4.04
		30°C	12.73	9.76	3.32	12.27	9.56	3.34	11.83	9.35	3.41	11.37	9.13	3.51	10.90	8.89	3.74	10.33	8.57	4.06
		33°C	12.99	10.88	3.33	12.59	10.60	3.36	12.21	10.29	3.43	11.82	9.96	3.54	11.42	9.62	3.77	10.91	9.19	4.10
	22°C	27°C	13.86	6.78	3.37	13.37	6.61	3.39	12.87	6.44	3.47	12.35	6.26	3.57	11.82	6.08	3.80	11.16	5.86	4.12
		30°C	13.90	8.31	3.37	13.40	8.13	3.39	12.90	7.94	3.47	12.38	7.76	3.57	11.85	7.57	3.80	11.19	7.33	4.12
		33°C	13.94	9.75	3.37	13.44	9.56	3.40	12.94	9.37	3.47	12.42	9.18	3.58	11.90	8.98	3.81	11.25	8.72	4.13
		36°C	14.03	11.09	3.38	13.55	10.87	3.40	13.08	10.64	3.48	12.60	10.39	3.59	12.13	10.10	3.82	11.56	9.71	4.16
1100	16°C	21°C	11.61	7.04	3.28	11.19	6.85	3.29	10.76	6.67	3.36	10.31	6.47	3.45	9.85	6.27	3.67	9.28	6.02	3.98
		24°C	11.66	8.54	3.29	11.23	8.34	3.30	10.80	8.15	3.36	10.36	7.94	3.45	9.91	7.73	3.67	9.34	7.45	3.98
		27°C	11.80	9.87	3.29	11.41	9.62	3.30	11.03	9.35	3.37	10.63	9.06	3.47	10.24	8.73	3.69	9.76	8.31	4.01
		30°C	12.41	10.58	3.31	12.04	10.27	3.33	11.67	9.96	3.41	11.29	9.62	3.51	10.89	9.28	3.74	10.39	8.85	4.06
	19°C	24°C	12.78	7.01	3.33	12.32	6.83	3.34	11.85	6.65	3.41	11.37	6.46	3.51	10.87	6.27	3.73	10.25	6.03	4.05
		27°C	12.82	8.55	3.33	12.36	8.36	3.35	11.89	8.16	3.42	11.41	7.96	3.51	10.91	7.76	3.74	10.29	7.51	4.05
		30°C	12.88	10.00	3.33	12.41	9.79	3.35	11.96	9.58	3.42	11.51	9.34	3.52	11.03	9.09	3.75	10.46	8.76	4.07
		33°C	13.14	11.15	3.34	12.74	10.86	3.36	12.36	10.54	3.44	11.96	10.20	3.55	11.55	9.84	3.78	11.03	9.40	4.11
	22°C	27°C	14.03	6.94	3.38	13.52	6.77	3.40	13.02	6.59	3.48	12.50	6.41	3.58	11.96	6.23	3.81	11.29	5.99	4.13
		30°C	14.06	8.52	3.38	13.56	8.33	3.40	13.05	8.14	3.48	12.53	7.94	3.58	11.99	7.74	3.81	11.32	7.50	4.13
		33°C	14.10	9.99	3.38	13.60	9.79	3.40	13.09	9.60	3.48	12.57	9.40	3.58	12.04	9.19	3.82	11.38	8.92	4.14
		36°C	14.19	11.37	3.38	13.71	11.14	3.41	13.23	10.90	3.49	12.75	10.64	3.60	12.27	10.34	3.83	11.70	9.94	4.17

Model: ACC50C - ALC~~50C~~
Cooling Mode

50D

AFR (CFM)	EWB	EDB	Outdoor temperature																	
			19°C			25°C			30°C			35°C			40°C			46°C		
			TC	SHC	PI	TC	SHC	PI	TC	SHC	PI	TC	SHC	PI	TC	SHC	PI	TC	SHC	PI
1210	16°C	21°C	13.41	8.34	4.61	12.93	8.12	4.62	12.44	7.91	4.71	11.93	7.70	4.84	11.39	7.47	5.15	10.73	7.18	5.59
		24°C	13.47	10.12	4.61	12.98	9.90	4.63	12.49	9.68	4.72	11.98	9.44	4.85	11.46	9.20	5.15	10.80	8.89	5.59
		27°C	13.63	11.69	4.62	13.19	11.41	4.64	12.75	11.10	4.73	12.30	10.77	4.87	11.84	10.40	5.18	11.28	9.92	5.63
		30°C	14.33	12.54	4.65	13.92	12.18	4.68	13.49	11.82	4.78	13.06	11.44	4.92	12.59	11.05	5.25	12.02	10.56	5.70
	19°C	24°C	14.76	8.31	4.67	14.23	8.10	4.69	13.70	7.89	4.79	13.15	7.68	4.93	12.57	7.46	5.24	11.85	7.19	5.69
		27°C	14.81	10.13	4.67	14.28	9.91	4.69	13.75	9.69	4.80	13.19	9.47	4.93	12.61	9.24	5.25	11.90	8.96	5.69
		30°C	14.88	11.85	4.68	14.35	11.61	4.70	13.83	11.37	4.80	13.30	11.11	4.94	12.76	10.83	5.26	12.09	10.45	5.71
		33°C	15.18	13.21	4.69	14.73	12.87	4.72	14.29	12.51	4.83	13.83	12.12	4.98	13.36	11.72	5.31	12.76	11.21	5.77
	22°C	27°C	16.20	8.23	4.74	15.63	8.03	4.77	15.05	7.83	4.88	14.45	7.62	5.02	13.83	7.41	5.35	13.06	7.15	5.80
		30°C	16.24	10.09	4.74	15.67	9.87	4.77	15.09	9.66	4.88	14.49	9.44	5.03	13.87	9.22	5.35	13.10	8.95	5.80
		33°C	16.29	11.83	4.74	15.71	11.61	4.78	15.13	11.40	4.89	14.53	11.18	5.03	13.92	10.94	5.35	13.16	10.64	5.81
		36°C	16.40	13.47	4.75	15.84	13.21	4.78	15.29	12.94	4.90	14.74	12.65	5.05	14.19	12.31	5.38	13.53	11.86	5.85
1280	16°C	21°C	13.76	8.78	4.63	13.26	8.56	4.65	12.75	8.33	4.74	12.23	8.10	4.87	11.68	7.85	5.18	11.00	7.54	5.61
		24°C	13.82	10.66	4.64	13.31	10.42	4.65	12.81	10.19	4.74	12.28	9.94	4.87	11.74	9.68	5.18	11.07	9.34	5.62
		27°C	13.99	12.32	4.64	13.53	12.01	4.66	13.07	11.69	4.76	12.61	11.33	4.89	12.14	10.93	5.21	11.57	10.42	5.66
		30°C	14.70	13.21	4.68	14.27	12.83	4.70	13.84	12.44	4.80	13.39	12.04	4.95	12.91	11.62	5.27	12.32	11.09	5.73
	19°C	24°C	15.15	8.75	4.69	14.60	8.53	4.72	14.05	8.31	4.82	13.48	8.08	4.95	12.89	7.85	5.27	12.15	7.56	5.71
		27°C	15.20	10.68	4.70	14.65	10.44	4.72	14.09	10.21	4.82	13.53	9.96	4.96	12.93	9.72	5.27	12.20	9.41	5.72
		30°C	15.26	12.48	4.70	14.72	12.23	4.72	14.18	11.97	4.83	13.64	11.69	4.96	13.08	11.39	5.28	12.40	10.98	5.74
		33°C	15.57	13.92	4.71	15.11	13.56	4.74	14.65	13.17	4.86	14.18	12.75	5.00	13.69	12.32	5.34	13.08	11.78	5.80
	22°C	27°C	16.62	8.67	4.76	16.03	8.46	4.80	15.43	8.24	4.91	14.82	8.02	5.05	14.18	7.79	5.37	13.39	7.52	5.83
		30°C	16.67	10.63	4.77	16.07	10.40	4.80	15.47	10.17	4.91	14.85	9.93	5.05	14.21	9.69	5.38	13.43	9.40	5.83
		33°C	16.71	12.47	4.77	16.12	12.23	4.80	15.51	12.00	4.91	14.90	11.76	5.06	14.27	11.51	5.38	13.49	11.18	5.84
		36°C	16.82	14.19	4.77	16.25	13.91	4.81	15.68	13.62	4.92	15.12	13.30	5.07	14.55	12.94	5.41	13.87	12.46	5.88
1380	16°C	21°C	14.01	9.11	4.65	13.50	8.87	4.66	12.98	8.64	4.76	12.44	8.39	4.88	11.89	8.13	5.19	11.19	7.81	5.63
		24°C	14.07	11.06	4.65	13.55	10.81	4.67	13.03	10.56	4.76	12.50	10.30	4.89	11.95	10.02	5.20	11.27	9.67	5.64
		27°C	14.24	12.78	4.66	13.77	12.46	4.68	13.30	12.11	4.78	12.83	11.74	4.91	12.36	11.32	5.23	11.77	10.78	5.68
		30°C	14.97	13.70	4.69	14.53	13.30	4.72	14.08	12.90	4.82	13.62	12.48	4.96	13.14	12.04	5.29	12.54	11.48	5.75
	19°C	24°C	15.42	9.08	4.71	14.86	8.85	4.73	14.30	8.61	4.84	13.72	8.37	4.97	13.12	8.13	5.29	12.37	7.82	5.73
		27°C	15.47	11.08	4.71	14.91	10.83	4.74	14.35	10.58	4.84	13.77	10.32	4.97	13.16	10.06	5.29	12.41	9.74	5.74
		30°C	15.54	12.95	4.72	14.98	12.68	4.74	14.44	12.41	4.84	13.88	12.11	4.98	13.31	11.79	5.30	12.62	11.37	5.76
		33°C	15.85	14.44	4.73	15.37	14.06	4.76	14.91	13.65	4.87	14.43	13.22	5.02	13.94	12.76	5.36	13.31	12.19	5.82
	22°C	27°C	16.92	8.99	4.78	16.32	8.77	4.81	15.71	8.54	4.92	15.08	8.31	5.07	14.43	8.07	5.39	13.62	7.78	5.85
		30°C	16.97	11.03	4.78	16.36	10.78	4.82	15.75	10.54	4.93	15.12	10.29	5.07	14.47	10.04	5.40	13.66	9.73	5.85
		33°C	17.01	12.93	4.79	16.40	12.69	4.82	15.79	12.44	4.93	15.16	12.18	5.07	14.52	11.92	5.40	13.73	11.57	5.86
		36°C	17.13	14.72	4.79	16.54	14.42	4.83	15.96	14.12	4.94	15.39	13.79	5.09	14.81	13.40	5.43	14.12	12.89	5.90
1590	16°C	21°C	14.18	9.34	4.66	13.66	9.09	4.67	13.13	8.84	4.77	12.59	8.59	4.90	12.03	8.32	5.21	11.33	7.98	5.65
		24°C	14.24	11.34	4.66	13.71	11.07	4.68	13.19	10.81	4.77	12.65	10.54	4.90	12.09	10.26	5.21	11.40	9.89	5.65
		27°C	14.40	13.10	4.67	13.93	12.76	4.69	13.46	12.41	4.79	12.98	12.02	4.92	12.50	11.58	5.24	11.91	11.03	5.70
		30°C	15.14	14.04	4.70	14.70	13.63	4.73	14.25	13.21	4.83	13.78	12.77	4.98	13.29	12.32	5.30	12.68	11.74	5.76
	19°C	24°C	15.60	9.30	4.72	15.03	9.06	4.74	14.46	8.82	4.85	13.88	8.57	4.98	13.27	8.32	5.30	12.51	8.00	5.75
		27°C	15.65	11.35	4.72	15.08	11.09	4.75	14.51	10.83	4.85	13.93	10.57	4.99	13.32	10.30	5.30	12.56	9.96	5.75
		30°C	15.72	13.27	4.73	15.15	12.99	4.75	14.61	12.71	4.85	14.05	12.40	4.99	13.47	12.07	5.31	12.77	11.62	5.77
		33°C	16.04	14.80	4.74	15.56	14.41	4.77	15.08	13.98	4.89	14.60	13.53	5.03	14.10	13.06	5.37	13.47	12.47	5.83
	22°C	27°C	17.12	9.21	4.79	16.51	8.98	4.82	15.89	8.75	4.94	15.26	8.51	5.08	14.60	8.26	5.41	13.78	7.95	5.86
		30°C	17.17	11.30	4.79	16.55	11.05	4.83	15.93	10.80	4.94	15.30	10.54	5.08	14.64	10.27	5.41	13.82	9.95	5.87
		33°C	17.21	13.25	4.80	16.60	12.99	4.83	15.97	12.74	4.94	15.34	12.47	5.09	14.69	12.20	5.41	13.89	11.84	5.87
		36°C	17.33	15.08	4.80	16.73	14.78	4.84	16.15	14.46	4.95	15.57	14.11	5.10	14.98	13.72	5.44	14.28	13.18	5.91

Remark:
AFR: Air flow rate (CFM)
EWB: Entering Wet Bulb Temp. (˚C)
EDB: Entering Dry Bulb Temp. (˚C)

TC: Total Cooling Capacity (kW)
SHC: Sensible Heat Capacity (kW)
PI: Power Input

Notes:
1. Ratings shown are gross capacities which do not include a deduction for indoor fan motor heat.
2. shows nominal capacities.
3. Direct interpolation is permissible. Do not extrapolate.

Model: ACC60C - ALC~~61C~~ 61D
Cooling Mode

AFR (CFM)	EWB	EDB	Outdoor temperature																	
			19°C			25°C			30°C			35°C			40°C			46°C		
			TC	SHC	PI	TC	SHC	PI	TC	SHC	PI	TC	SHC	PI	TC	SHC	PI	TC	SHC	PI
1290	16°C	21°C	15.99	9.94	5.57	15.41	9.69	5.58	14.83	9.43	5.69	14.22	9.17	5.85	13.58	8.90	6.22	12.79	8.56	6.74
		24°C	16.06	12.07	5.57	15.47	11.80	5.59	14.89	11.54	5.70	14.28	11.26	5.85	13.66	10.97	6.22	12.88	10.60	6.75
		27°C	16.25	13.94	5.58	15.72	13.60	5.60	15.20	13.23	5.72	14.66	12.84	5.88	14.12	12.39	6.26	13.45	11.82	6.80
		30°C	17.08	14.95	5.62	16.59	14.52	5.65	16.09	14.09	5.77	15.56	13.64	5.94	15.01	13.18	6.33	14.32	12.59	6.88
	19°C	24°C	17.60	9.90	5.64	16.97	9.66	5.67	16.33	9.41	5.79	15.67	9.16	5.95	14.99	8.90	6.33	14.13	8.58	6.86
		27°C	17.66	12.08	5.64	17.02	11.82	5.67	16.39	11.56	5.79	15.73	11.29	5.95	15.04	11.02	6.33	14.18	10.68	6.87
		30°C	17.73	14.13	5.65	17.10	13.84	5.67	16.49	13.56	5.80	15.86	13.24	5.96	15.21	12.91	6.35	14.42	12.46	6.89
		33°C	18.09	15.75	5.66	17.56	15.35	5.70	17.03	14.92	5.83	16.49	14.45	6.01	15.92	13.97	6.41	15.21	13.37	6.97
	22°C	27°C	19.32	9.81	5.72	18.63	9.57	5.76	17.94	9.33	5.89	17.23	9.09	6.06	16.49	8.84	6.46	15.57	8.53	7.00
		30°C	19.36	12.03	5.73	18.68	11.77	5.76	17.98	11.52	5.90	17.27	11.26	6.07	16.53	10.99	6.46	15.61	10.66	7.01
		33°C	19.42	14.11	5.73	18.73	13.85	5.77	18.04	13.59	5.90	17.32	13.32	6.07	16.59	13.05	6.47	15.69	12.69	7.01
		36°C	19.55	16.05	5.73	18.88	15.74	5.78	18.23	15.43	5.91	17.58	15.08	6.09	16.92	14.68	6.49	16.13	14.13	7.06
1430	16°C	21°C	16.41	10.47	5.60	15.81	10.20	5.61	15.20	9.93	5.72	14.58	9.65	5.88	13.93	9.36	6.25	13.11	8.99	6.78
		24°C	16.48	12.71	5.60	15.87	12.43	5.61	15.27	12.14	5.73	14.64	11.85	5.88	14.00	11.54	6.26	13.20	11.13	6.79
		27°C	16.67	14.69	5.61	16.13	14.32	5.63	15.58	13.93	5.75	15.03	13.51	5.91	14.48	13.03	6.29	13.79	12.42	6.84
		30°C	17.53	15.75	5.65	17.02	15.29	5.67	16.50	14.83	5.80	15.96	14.35	5.97	15.39	13.86	6.37	14.69	13.23	6.92
	19°C	24°C	18.06	10.43	5.67	17.41	10.17	5.69	16.75	9.91	5.82	16.07	9.63	5.98	15.36	9.36	6.36	14.49	9.01	6.90
		27°C	18.12	12.73	5.67	17.46	12.44	5.70	16.80	12.17	5.82	16.12	11.88	5.98	15.42	11.58	6.37	14.54	11.22	6.91
		30°C	18.20	14.88	5.68	17.54	14.58	5.70	16.91	14.27	5.83	16.26	13.93	5.99	15.59	13.57	6.38	14.78	13.09	6.93
		33°C	18.57	16.60	5.69	18.01	16.17	5.73	17.46	15.70	5.86	16.91	15.20	6.04	16.32	14.69	6.44	15.60	14.05	7.01
	22°C	27°C	19.82	10.33	5.75	19.11	10.08	5.79	18.40	9.83	5.92	17.66	9.56	6.10	16.90	9.29	6.49	15.96	8.96	7.04
		30°C	19.87	12.67	5.75	19.16	12.40	5.79	18.44	12.12	5.93	17.71	11.84	6.10	16.95	11.56	6.49	16.01	11.20	7.04
		33°C	19.93	14.86	5.76	19.21	14.58	5.80	18.49	14.31	5.93	17.76	14.02	6.11	17.01	13.72	6.50	16.08	13.33	7.05
		36°C	20.06	16.91	5.76	19.37	16.58	5.81	18.70	16.24	5.94	18.02	15.86	6.12	17.35	15.43	6.53	16.54	14.85	7.10
1530	16°C	21°C	16.70	10.86	5.62	16.09	10.58	5.63	15.47	10.30	5.74	14.83	10.00	5.90	14.17	9.70	6.27	13.34	9.31	6.80
		24°C	16.78	13.19	5.62	16.15	12.89	5.64	15.54	12.59	5.75	14.90	12.27	5.90	14.25	11.95	6.28	13.43	11.52	6.81
		27°C	16.97	15.24	5.63	16.41	14.85	5.65	15.86	14.44	5.77	15.30	14.00	5.93	14.73	13.50	6.32	14.03	12.85	6.86
		30°C	17.84	16.34	5.67	17.32	15.86	5.70	16.79	15.38	5.82	16.24	14.87	5.99	15.67	14.35	6.39	14.94	13.69	6.94
	19°C	24°C	18.38	10.82	5.69	17.72	10.55	5.72	17.05	10.27	5.84	16.35	9.98	6.00	15.64	9.69	6.39	14.74	9.32	6.92
		27°C	18.44	13.20	5.69	17.77	12.91	5.72	17.10	12.61	5.84	16.41	12.31	6.01	15.69	11.99	6.39	14.80	11.61	6.93
		30°C	18.53	15.44	5.70	17.86	15.12	5.72	17.21	14.79	5.85	16.55	14.44	6.01	15.87	14.06	6.40	15.04	13.55	6.95
		33°C	18.90	17.22	5.71	18.33	16.76	5.75	17.77	16.28	5.89	17.21	15.76	6.06	16.61	15.21	6.47	15.87	14.54	7.03
	22°C	27°C	20.18	10.72	5.77	19.45	10.46	5.81	18.73	10.19	5.95	17.98	9.91	6.12	17.20	9.62	6.51	16.24	9.27	7.06
		30°C	20.23	13.15	5.78	19.50	12.86	5.82	18.77	12.57	5.95	18.02	12.27	6.12	17.25	11.97	6.52	16.29	11.59	7.07
		33°C	20.28	15.42	5.78	19.56	15.12	5.82	18.83	14.83	5.95	18.07	14.53	6.13	17.31	14.21	6.52	16.37	13.80	7.08
		36°C	20.42	17.55	5.78	19.71	17.20	5.83	19.03	16.83	5.97	18.34	16.44	6.15	17.66	15.98	6.55	16.83	15.37	7.12
1650	16°C	21°C	16.90	11.13	5.63	16.28	10.84	5.64	15.66	10.54	5.76	15.01	10.24	5.91	14.34	9.92	6.29	13.50	9.52	6.82
		24°C	16.97	13.52	5.63	16.34	13.20	5.65	15.72	12.89	5.76	15.08	12.56	5.92	14.42	12.23	6.29	13.59	11.79	6.82
		27°C	17.17	15.61	5.64	16.61	15.21	5.66	16.05	14.79	5.78	15.48	14.33	5.94	14.91	13.81	6.33	14.20	13.15	6.88
		30°C	18.05	16.74	5.68	17.52	16.25	5.71	16.99	15.75	5.84	16.43	15.22	6.01	15.85	14.68	6.40	15.12	14.00	6.96
	19°C	24°C	18.60	11.09	5.70	17.92	10.80	5.73	17.24	10.52	5.85	16.55	10.22	6.01	15.82	9.91	6.40	14.92	9.54	6.94
		27°C	18.66	13.53	5.70	17.98	13.22	5.73	17.30	12.92	5.86	16.60	12.60	6.02	15.87	12.28	6.40	14.97	11.87	6.95
		30°C	18.74	15.82	5.71	18.07	15.49	5.74	17.41	15.15	5.86	16.74	14.78	6.03	16.05	14.39	6.42	15.22	13.86	6.97
		33°C	19.12	17.64	5.73	18.54	17.17	5.76	17.98	16.67	5.90	17.41	16.13	6.08	16.81	15.57	6.48	16.06	14.87	7.05
	22°C	27°C	20.41	10.98	5.79	19.68	10.71	5.83	18.94	10.43	5.96	18.19	10.14	6.13	17.40	9.85	6.53	16.43	9.48	7.08
		30°C	20.46	13.47	5.79	19.73	13.17	5.83	18.99	12.87	5.96	18.23	12.56	6.14	17.45	12.25	6.53	16.48	11.86	7.08
		33°C	20.52	15.80	5.79	19.79	15.49	5.83	19.04	15.19	5.97	18.29	14.87	6.14	17.52	14.54	6.54	16.56	14.11	7.09
		36°C	20.66	17.98	5.80	19.95	17.61	5.84	19.25	17.24	5.98	18.56	16.82	6.16	17.86	16.35	6.57	17.03	15.72	7.14

Remark:
AFR: Air flow rate (CFM)
EWB: Entering Wet Bulb Temp. (˚C)
EDB: Entering Dry Bulb Temp. (˚C)

TC: Total Cooling Capacity (kW)
SHC: Sensible Heat Capacity (kW)
PI: Power Input

Notes:
1. Ratings shown are gross capacities which do not include a deduction for indoor fan motor heat.
2. shows nominal capacities.
3. Direct interpolation is permissible. Do not extrapolate.

Heat Pump (R22)

Model: ACC10CR - ALC10CR

Cooling Mode

AFR (CFM)	EWB	EDB	Outdoor temperature																	
			19°C			25°C			30°C			35°C			40°C			46°C		
			TC	SHC	PI	TC	SHC	PI	TC	SHC	PI	TC	SHC	PI	TC	SHC	PI	TC	SHC	PI
220	16°C	21°C	2.71	1.66	0.83	2.61	1.62	0.84	2.51	1.58	0.85	2.41	1.53	0.88	2.30	1.49	0.93	2.17	1.43	1.01
		24°C	2.72	2.02	0.83	2.62	1.97	0.84	2.52	1.93	0.85	2.42	1.88	0.88	2.31	1.83	0.93	2.18	1.77	1.01
		27°C	2.75	2.33	0.84	2.66	2.27	0.84	2.57	2.21	0.86	2.48	2.15	0.88	2.39	2.07	0.94	2.28	1.98	1.02
		30°C	2.89	2.50	0.84	2.81	2.43	0.85	2.73	2.36	0.86	2.64	2.28	0.89	2.54	2.20	0.95	2.43	2.10	1.03
	19°C	24°C	2.98	1.66	0.85	2.87	1.61	0.85	2.77	1.57	0.87	2.66	1.53	0.89	2.54	1.49	0.95	2.39	1.43	1.03
		27°C	2.99	2.02	0.85	2.88	1.98	0.85	2.78	1.93	0.87	2.66	1.89	0.89	2.55	1.84	0.95	2.40	1.78	1.03
		30°C	3.00	2.36	0.85	2.90	2.31	0.85	2.79	2.27	0.87	2.69	2.21	0.89	2.58	2.16	0.95	2.44	2.08	1.03
		33°C	3.07	2.63	0.85	2.97	2.57	0.85	2.89	2.49	0.87	2.79	2.42	0.90	2.70	2.34	0.96	2.58	2.23	1.04
	22°C	27°C	3.27	1.64	0.86	3.16	1.60	0.86	3.04	1.56	0.88	2.92	1.52	0.91	2.79	1.48	0.97	2.64	1.43	1.05
		30°C	3.28	2.01	0.86	3.16	1.97	0.86	3.05	1.92	0.88	2.93	1.88	0.91	2.80	1.84	0.97	2.64	1.78	1.05
		33°C	3.29	2.36	0.86	3.17	2.31	0.86	3.06	2.27	0.88	2.93	2.23	0.91	2.81	2.18	0.97	2.66	2.12	1.05
		36°C	3.31	2.68	0.86	3.20	2.63	0.87	3.09	2.58	0.89	2.98	2.52	0.91	2.87	2.45	0.97	2.73	2.36	1.06
260	16°C	21°C	2.78	1.75	0.84	2.68	1.71	0.84	2.58	1.66	0.86	2.47	1.61	0.88	2.36	1.56	0.94	2.22	1.50	1.02
		24°C	2.79	2.13	0.84	2.69	2.08	0.84	2.59	2.03	0.86	2.48	1.98	0.88	2.37	1.93	0.94	2.24	1.86	1.02
		27°C	2.82	2.46	0.84	2.73	2.39	0.84	2.64	2.33	0.86	2.55	2.26	0.89	2.45	2.18	0.94	2.34	2.08	1.02
		30°C	2.97	2.63	0.85	2.88	2.56	0.85	2.79	2.48	0.87	2.70	2.40	0.89	2.61	2.32	0.95	2.49	2.21	1.04
	19°C	24°C	3.06	1.74	0.85	2.95	1.70	0.85	2.84	1.66	0.87	2.72	1.61	0.90	2.60	1.56	0.95	2.45	1.51	1.03
		27°C	3.07	2.13	0.85	2.96	2.08	0.85	2.85	2.03	0.87	2.73	1.99	0.90	2.61	1.94	0.95	2.46	1.88	1.03
		30°C	3.08	2.49	0.85	2.97	2.44	0.85	2.86	2.39	0.87	2.75	2.33	0.90	2.64	2.27	0.96	2.50	2.19	1.04
		33°C	3.15	2.77	0.85	3.05	2.70	0.86	2.96	2.62	0.88	2.86	2.54	0.91	2.77	2.46	0.97	2.64	2.35	1.05
	22°C	27°C	3.36	1.73	0.86	3.24	1.69	0.87	3.12	1.64	0.89	2.99	1.60	0.91	2.86	1.55	0.97	2.70	1.50	1.05
		30°C	3.37	2.12	0.86	3.25	2.07	0.87	3.12	2.03	0.89	3.00	1.98	0.91	2.87	1.93	0.97	2.71	1.87	1.06
		33°C	3.38	2.48	0.86	3.26	2.44	0.87	3.13	2.39	0.89	3.01	2.34	0.91	2.88	2.29	0.97	2.72	2.23	1.06
		36°C	3.40	2.83	0.86	3.28	2.77	0.87	3.17	2.71	0.89	3.05	2.65	0.92	2.94	2.58	0.98	2.80	2.48	1.06
300	16°C	21°C	2.83	1.82	0.84	2.73	1.77	0.84	2.62	1.72	0.86	2.51	1.67	0.88	2.40	1.62	0.94	2.26	1.56	1.02
		24°C	2.84	2.20	0.84	2.74	2.15	0.84	2.63	2.10	0.86	2.52	2.05	0.88	2.41	2.00	0.94	2.28	1.93	1.02
		27°C	2.88	2.55	0.84	2.78	2.48	0.85	2.69	2.41	0.86	2.59	2.34	0.89	2.50	2.26	0.95	2.38	2.15	1.03
		30°C	3.02	2.73	0.85	2.93	2.65	0.85	2.84	2.57	0.87	2.75	2.49	0.90	2.65	2.40	0.96	2.53	2.29	1.04
	19°C	24°C	3.11	1.81	0.85	3.00	1.76	0.86	2.89	1.72	0.87	2.77	1.67	0.90	2.65	1.62	0.96	2.50	1.56	1.04
		27°C	3.12	2.21	0.85	3.01	2.16	0.86	2.90	2.11	0.88	2.78	2.06	0.90	2.66	2.00	0.96	2.51	1.94	1.04
		30°C	3.14	2.58	0.85	3.03	2.53	0.86	2.92	2.47	0.88	2.80	2.41	0.90	2.69	2.35	0.96	2.55	2.26	1.04
		33°C	3.20	2.88	0.86	3.10	2.80	0.86	3.01	2.72	0.88	2.91	2.63	0.91	2.81	2.54	0.97	2.69	2.43	1.05
	22°C	27°C	3.42	1.79	0.87	3.30	1.75	0.87	3.17	1.70	0.89	3.05	1.66	0.92	2.91	1.61	0.98	2.75	1.55	1.06
		30°C	3.43	2.20	0.87	3.30	2.15	0.87	3.18	2.10	0.89	3.05	2.05	0.92	2.92	2.00	0.98	2.76	1.94	1.06
		33°C	3.44	2.58	0.87	3.31	2.53	0.87	3.19	2.48	0.89	3.06	2.43	0.92	2.93	2.37	0.98	2.77	2.31	1.06
		36°C	3.46	2.93	0.87	3.34	2.87	0.87	3.22	2.81	0.89	3.11	2.75	0.92	2.99	2.67	0.98	2.85	2.57	1.07

Remark:
AFR: Air flow rate (CFM)
EWB: Entering Wet Bulb Temp. (˚C)
EDB: Entering Dry Bulb Temp. (˚C)
TC: Total Cooling Capacity (kW)
SHC: Sensible Heat Capacity (kW)
PI: Power Input

Notes:
1. Ratings shown are gross capacities which do not include a deduction for indoor fan motor heat.
2. shows nominal capacities.
3. Direct interpolation is permissible. Do not extrapolate.

Heating Mode

ID DB°C	Outdoor WB°C													
	-9		-6		-5		6		12		15		18	
	TC(kW)	SC(kW)	TC(kW)	SC(kW)	TC(kW)	SC(kW)	TC(kW)	SC(kW)	TC(kW)	SC(kW)	TC(kW)	SC(kW)	TC(kW)	SC(kW)
15	1.202	1.202	1.497	1.497	1.596	1.596	2.679	2.679	3.269	3.269	3.565	3.565	3.860	3.860
17	1.173	1.173	1.467	1.467	1.565	1.565	2.670	2.670	3.180	3.180	3.465	3.465	3.750	3.750
19	1.145	1.145	1.437	1.437	1.535	1.535	2.661	2.661	3.091	3.091	3.366	3.366	3.640	3.640
21	1.117	1.117	1.408	1.408	1.505	1.505	2.652	2.652	3.002	3.002	3.266	3.266	3.531	3.531
23	1.113	1.113	1.384	1.384	1.474	1.474	2.521	2.521	2.913	2.913	3.167	3.167	3.421	3.421
25	1.109	1.109	1.360	1.360	1.444	1.444	2.390	2.390	2.824	2.824	3.068	3.068	3.311	3.311
27	1.105	1.105	1.337	1.337	1.414	1.414	2.259	2.259	2.735	2.735	2.968	2.968	3.201	3.201
	FROST REGION													

Heat Pump (R22)

Model: ACC15CR - ALC15CR
Cooling Mode

AFR (CFM)	EWB	EDB	Outdoor temperature																	
			19°C			25°C			30°C			35°C			40°C			46°C		
			TC	SHC	PI	TC	SHC	PI	TC	SHC	PI	TC	SHC	PI	TC	SHC	PI	TC	SHC	PI
360	16°C	21°C	3.51	2.12	1.17	3.38	2.07	1.18	3.25	2.01	1.20	3.12	1.96	1.23	2.98	1.90	1.31	2.81	1.83	1.42
		24°C	3.52	2.58	1.18	3.39	2.52	1.18	3.27	2.46	1.20	3.13	2.40	1.23	3.00	2.34	1.31	2.82	2.26	1.42
		27°C	3.56	2.98	1.18	3.45	2.90	1.18	3.33	2.83	1.21	3.22	2.74	1.24	3.10	2.65	1.32	2.95	2.52	1.44
		30°C	3.75	3.19	1.18	3.64	3.10	1.19	3.53	3.01	1.22	3.41	2.91	1.25	3.29	2.81	1.34	3.14	2.69	1.45
	19°C	24°C	3.86	2.11	1.19	3.72	2.06	1.20	3.58	2.01	1.22	3.44	1.96	1.25	3.29	1.90	1.34	3.10	1.83	1.45
		27°C	3.87	2.58	1.19	3.73	2.52	1.20	3.59	2.47	1.22	3.45	2.41	1.26	3.30	2.35	1.34	3.11	2.28	1.45
		30°C	3.89	3.02	1.19	3.75	2.96	1.20	3.62	2.89	1.22	3.48	2.83	1.26	3.34	2.76	1.34	3.16	2.66	1.45
		33°C	3.97	3.36	1.19	3.85	3.28	1.20	3.74	3.18	1.23	3.62	3.09	1.27	3.49	2.98	1.35	3.34	2.85	1.47
	22°C	27°C	4.24	2.09	1.21	4.09	2.04	1.22	3.94	1.99	1.24	3.78	1.94	1.28	3.62	1.89	1.36	3.42	1.82	1.48
		30°C	4.25	2.57	1.21	4.10	2.51	1.22	3.95	2.46	1.24	3.79	2.40	1.28	3.63	2.35	1.36	3.42	2.28	1.48
		33°C	4.26	3.01	1.21	4.11	2.96	1.22	3.96	2.90	1.24	3.80	2.85	1.28	3.64	2.79	1.36	3.44	2.71	1.48
		36°C	4.29	3.43	1.21	4.14	3.36	1.22	4.00	3.29	1.25	3.86	3.22	1.29	3.71	3.13	1.37	3.54	3.02	1.49
440	16°C	21°C	3.60	2.24	1.18	3.47	2.18	1.18	3.34	2.12	1.21	3.20	2.06	1.24	3.06	2.00	1.32	2.88	1.92	1.43
		24°C	3.62	2.71	1.18	3.48	2.65	1.18	3.35	2.59	1.21	3.21	2.53	1.24	3.07	2.46	1.32	2.90	2.38	1.43
		27°C	3.66	3.14	1.18	3.54	3.06	1.19	3.42	2.97	1.21	3.30	2.88	1.25	3.18	2.78	1.33	3.03	2.65	1.44
		30°C	3.85	3.36	1.19	3.73	3.27	1.20	3.62	3.17	1.22	3.50	3.06	1.26	3.38	2.96	1.34	3.22	2.82	1.46
	19°C	24°C	3.96	2.23	1.20	3.82	2.17	1.20	3.67	2.12	1.23	3.53	2.06	1.26	3.37	2.00	1.34	3.18	1.92	1.46
		27°C	3.97	2.72	1.20	3.83	2.66	1.20	3.69	2.60	1.23	3.54	2.54	1.26	3.38	2.47	1.34	3.19	2.40	1.46
		30°C	3.99	3.18	1.20	3.85	3.11	1.20	3.71	3.05	1.23	3.57	2.97	1.26	3.42	2.90	1.35	3.24	2.80	1.46
		33°C	4.07	3.54	1.20	3.95	3.45	1.21	3.83	3.35	1.24	3.71	3.25	1.27	3.58	3.14	1.36	3.42	3.00	1.48
	22°C	27°C	4.35	2.21	1.21	4.19	2.15	1.22	4.04	2.10	1.25	3.87	2.04	1.29	3.71	1.98	1.37	3.50	1.91	1.48
		30°C	4.36	2.71	1.21	4.20	2.65	1.22	4.05	2.59	1.25	3.88	2.53	1.29	3.72	2.47	1.37	3.51	2.39	1.49
		33°C	4.37	3.17	1.21	4.22	3.11	1.22	4.06	3.05	1.25	3.90	2.99	1.29	3.73	2.93	1.37	3.53	2.85	1.49
		36°C	4.40	3.61	1.22	4.25	3.54	1.22	4.10	3.47	1.25	3.95	3.39	1.29	3.81	3.30	1.38	3.63	3.17	1.50
510	16°C	21°C	3.66	2.32	1.18	3.53	2.26	1.19	3.39	2.20	1.21	3.25	2.14	1.24	3.11	2.07	1.32	2.93	1.99	1.44
		24°C	3.68	2.82	1.19	3.54	2.75	1.19	3.41	2.69	1.21	3.27	2.62	1.25	3.13	2.55	1.32	2.95	2.46	1.44
		27°C	3.72	3.25	1.19	3.60	3.17	1.19	3.48	3.08	1.22	3.36	2.99	1.25	3.23	2.88	1.33	3.08	2.74	1.45
		30°C	3.91	3.49	1.20	3.80	3.39	1.20	3.68	3.28	1.23	3.56	3.18	1.26	3.44	3.06	1.35	3.28	2.92	1.46
	19°C	24°C	4.03	2.31	1.20	3.89	2.25	1.21	3.74	2.19	1.23	3.59	2.13	1.27	3.43	2.07	1.35	3.23	1.99	1.46
		27°C	4.05	2.82	1.20	3.90	2.76	1.21	3.75	2.69	1.23	3.60	2.63	1.27	3.44	2.56	1.35	3.25	2.48	1.46
		30°C	4.06	3.30	1.20	3.92	3.23	1.21	3.78	3.16	1.23	3.63	3.08	1.27	3.48	3.00	1.35	3.30	2.89	1.47
		33°C	4.15	3.68	1.21	4.02	3.58	1.21	3.90	3.48	1.24	3.77	3.36	1.28	3.64	3.25	1.36	3.48	3.10	1.48
	22°C	27°C	4.43	2.29	1.22	4.27	2.23	1.23	4.11	2.17	1.25	3.94	2.12	1.29	3.77	2.05	1.37	3.56	1.98	1.49
		30°C	4.44	2.81	1.22	4.28	2.75	1.23	4.12	2.68	1.26	3.95	2.62	1.29	3.78	2.56	1.37	3.57	2.48	1.49
		33°C	4.45	3.29	1.22	4.29	3.23	1.23	4.13	3.17	1.26	3.97	3.10	1.29	3.80	3.03	1.38	3.59	2.95	1.49
		36°C	4.48	3.75	1.22	4.32	3.67	1.23	4.17	3.59	1.26	4.02	3.51	1.30	3.87	3.41	1.38	3.69	3.28	1.50

Remark:
AFR: Air flow rate (CFM)
EWB: Entering Wet Bulb Temp. (˚C)
EDB: Entering Dry Bulb Temp. (˚C)
TC: Total Cooling Capacity (kW)
SHC: Sensible Heat Capacity (kW)
PI: Power Input

Notes:
1. Ratings shown are gross capacities which do not include a deduction for indoor fan motor heat.
2. shows nominal capacities.
3. Direct interpolation is permissible. Do not extrapolate.

Heating Mode

ID DB°C	Outdoor WB°C													
	-9		-6		-5		6		12		15		18	
	TC(kW)	SC(kW)	TC(kW)	SC(kW)	TC(kW)	SC(kW)	TC(kW)	SC(kW)	TC(kW)	SC(kW)	TC(kW)	SC(kW)	TC(kW)	SC(kW)
15	1.493	1.493	1.873	1.873	1.999	1.999	3.392	3.392	4.152	4.152	4.532	4.532	4.912	4.912
17	1.454	1.454	1.834	1.834	1.961	1.961	3.378	3.378	4.039	4.039	4.406	4.406	4.773	4.773
19	1.416	1.416	1.796	1.796	1.923	1.923	3.364	3.364	3.926	3.926	4.279	4.279	4.633	4.633
21	1.377	1.377	1.758	1.758	1.885	1.885	3.350	3.350	3.813	3.813	4.153	4.153	4.493	4.493
23	1.375	1.375	1.729	1.729	1.846	1.846	3.186	3.186	3.699	3.699	4.026	4.026	4.353	4.353
25	1.374	1.374	1.699	1.699	1.808	1.808	3.023	3.023	3.586	3.586	3.900	3.900	4.214	4.214
27	1.372	1.372	1.670	1.670	1.770	1.770	2.860	2.860	3.473	3.473	3.773	3.773	4.074	4.074
	FROST REGION													

Model: ACC20CR - ALC18CR
Cooling Mode

AFR (CFM)	EWB	EDB	Outdoor temperature																	
			19°C			25°C			30°C			35°C			40°C			46°C		
			TC	SHC	PI	TC	SHC	PI	TC	SHC	PI	TC	SHC	PI	TC	SHC	PI	TC	SHC	PI
590	16°C	21°C	5.15	3.11	1.77	4.96	3.03	1.78	4.77	2.95	1.81	4.57	2.87	1.86	4.37	2.79	1.98	4.12	2.68	2.14
		24°C	5.17	3.78	1.77	4.98	3.69	1.78	4.79	3.61	1.81	4.60	3.53	1.86	4.39	3.44	1.98	4.14	3.32	2.15
		27°C	5.23	4.37	1.77	5.06	4.26	1.78	4.89	4.14	1.82	4.72	4.02	1.87	4.54	3.88	1.99	4.33	3.70	2.16
		30°C	5.50	4.68	1.79	5.34	4.55	1.80	5.18	4.41	1.84	5.01	4.27	1.89	4.83	4.13	2.01	4.61	3.94	2.19
	19°C	24°C	5.66	3.10	1.79	5.46	3.02	1.80	5.25	2.95	1.84	5.04	2.87	1.89	4.82	2.79	2.01	4.55	2.69	2.18
		27°C	5.68	3.78	1.79	5.48	3.70	1.80	5.27	3.62	1.84	5.06	3.54	1.89	4.84	3.45	2.01	4.56	3.34	2.19
		30°C	5.71	4.42	1.80	5.50	4.34	1.80	5.31	4.25	1.84	5.10	4.15	1.90	4.89	4.04	2.02	4.64	3.90	2.19
		33°C	5.82	4.93	1.80	5.65	4.81	1.81	5.48	4.67	1.86	5.31	4.53	1.91	5.12	4.38	2.04	4.89	4.19	2.22
	22°C	27°C	6.21	3.07	1.82	5.99	3.00	1.83	5.77	2.92	1.87	5.54	2.85	1.93	5.30	2.77	2.05	5.01	2.67	2.23
		30°C	6.23	3.77	1.82	6.01	3.69	1.83	5.79	3.61	1.88	5.56	3.53	1.93	5.32	3.44	2.05	5.02	3.34	2.23
		33°C	6.25	4.42	1.82	6.03	4.34	1.83	5.80	4.26	1.88	5.57	4.17	1.93	5.34	4.09	2.06	5.05	3.97	2.23
		36°C	6.29	5.03	1.82	6.08	4.93	1.84	5.87	4.83	1.88	5.66	4.72	1.94	5.44	4.60	2.07	5.19	4.43	2.25
640	16°C	21°C	5.28	3.28	1.78	5.09	3.19	1.78	4.89	3.11	1.82	4.69	3.02	1.87	4.48	2.93	1.99	4.22	2.82	2.16
		24°C	5.30	3.98	1.78	5.11	3.89	1.79	4.91	3.80	1.82	4.71	3.71	1.87	4.50	3.61	1.99	4.25	3.49	2.16
		27°C	5.36	4.60	1.78	5.19	4.48	1.79	5.01	4.36	1.83	4.84	4.23	1.88	4.66	4.08	2.00	4.44	3.89	2.17
		30°C	5.64	4.93	1.80	5.48	4.79	1.80	5.31	4.65	1.85	5.13	4.50	1.90	4.95	4.34	2.02	4.73	4.14	2.20
	19°C	24°C	5.81	3.27	1.80	5.60	3.18	1.81	5.39	3.10	1.85	5.17	3.02	1.90	4.94	2.93	2.02	4.66	2.82	2.19
		27°C	5.83	3.99	1.80	5.62	3.90	1.81	5.41	3.81	1.85	5.19	3.72	1.90	4.96	3.63	2.03	4.68	3.51	2.20
		30°C	5.86	4.66	1.80	5.64	4.57	1.81	5.44	4.47	1.85	5.23	4.36	1.91	5.02	4.25	2.03	4.76	4.10	2.20
		33°C	5.97	5.20	1.81	5.79	5.06	1.82	5.62	4.92	1.86	5.44	4.76	1.92	5.25	4.60	2.05	5.02	4.40	2.23
	22°C	27°C	6.38	3.24	1.83	6.15	3.16	1.84	5.92	3.08	1.88	5.68	2.99	1.94	5.44	2.91	2.06	5.14	2.81	2.24
		30°C	6.39	3.97	1.83	6.16	3.88	1.84	5.93	3.80	1.89	5.70	3.71	1.94	5.45	3.62	2.07	5.15	3.51	2.24
		33°C	6.41	4.65	1.83	6.18	4.57	1.84	5.95	4.48	1.89	5.71	4.39	1.94	5.47	4.30	2.07	5.18	4.18	2.24
		36°C	6.45	5.30	1.83	6.23	5.19	1.85	6.02	5.09	1.89	5.80	4.97	1.95	5.58	4.83	2.08	5.32	4.65	2.26
670	16°C	21°C	5.37	3.40	1.79	5.18	3.31	1.79	4.98	3.22	1.83	4.77	3.13	1.88	4.56	3.04	1.99	4.29	2.91	2.16
		24°C	5.40	4.13	1.79	5.20	4.04	1.79	5.00	3.94	1.83	4.80	3.84	1.88	4.58	3.74	2.00	4.32	3.61	2.17
		27°C	5.46	4.77	1.79	5.28	4.65	1.80	5.10	4.52	1.83	4.92	4.39	1.89	4.74	4.23	2.01	4.52	4.03	2.18
		30°C	5.74	5.12	1.80	5.57	4.97	1.81	5.40	4.82	1.85	5.23	4.66	1.91	5.04	4.49	2.03	4.81	4.29	2.21
	19°C	24°C	5.91	3.39	1.81	5.70	3.30	1.82	5.48	3.22	1.86	5.26	3.13	1.91	5.03	3.03	2.03	4.74	2.92	2.20
		27°C	5.93	4.14	1.81	5.72	4.04	1.82	5.50	3.95	1.86	5.28	3.85	1.91	5.05	3.76	2.03	4.76	3.64	2.20
		30°C	5.96	4.84	1.81	5.75	4.74	1.82	5.54	4.63	1.86	5.32	4.52	1.91	5.11	4.40	2.04	4.84	4.24	2.21
		33°C	6.08	5.39	1.82	5.90	5.25	1.83	5.72	5.10	1.87	5.54	4.93	1.93	5.35	4.76	2.06	5.11	4.55	2.24
	22°C	27°C	6.49	3.36	1.84	6.26	3.27	1.85	6.02	3.19	1.89	5.78	3.10	1.95	5.54	3.01	2.07	5.23	2.90	2.25
		30°C	6.51	4.12	1.84	6.27	4.03	1.85	6.04	3.94	1.89	5.80	3.84	1.95	5.55	3.75	2.07	5.24	3.63	2.25
		33°C	6.53	4.83	1.84	6.29	4.74	1.85	6.06	4.64	1.89	5.82	4.55	1.95	5.57	4.45	2.07	5.27	4.32	2.25
		36°C	6.57	5.50	1.84	6.34	5.39	1.85	6.12	5.27	1.90	5.90	5.15	1.95	5.68	5.00	2.08	5.41	4.81	2.26

Remark:
AFR: Air flow rate (CFM)
EWB: Entering Wet Bulb Temp. (˚C)
EDB: Entering Dry Bulb Temp. (˚C)

TC: Total Cooling Capacity (kW)
SHC: Sensible Heat Capacity (kW)
PI: Power Input

Notes:
1. Ratings shown are gross capacities which do not include a deduction for indoor fan motor heat.
2. shows nominal capacities.
3. Direct interpolation is permissible. Do not extrapolate.

Heating Mode

ID DB°C	Outdoor WB°C													
	-9		-6		-5		6		12		15		18	
	TC(kW)	SC(kW)	TC(kW)	SC(kW)	TC(kW)	SC(kW)	TC(kW)	SC(kW)	TC(kW)	SC(kW)	TC(kW)	SC(kW)	TC(kW)	SC(kW)
15	2.597	2.597	3.151	3.151	3.335	3.335	5.366	5.366	6.474	6.474	7.028	7.028	7.582	7.582
17	2.556	2.556	3.094	3.094	3.274	3.274	5.299	5.299	6.299	6.299	6.833	6.833	7.367	7.367
19	2.516	2.516	3.038	3.038	3.213	3.213	5.231	5.231	6.124	6.124	6.637	6.637	7.151	7.151
21	2.475	2.475	2.982	2.982	3.151	3.151	5.164	5.164	5.948	5.948	6.442	6.442	6.935	6.935
23	2.447	2.447	2.929	2.929	3.090	3.090	4.958	4.958	5.773	5.773	6.246	6.246	6.720	6.720
25	2.419	2.419	2.876	2.876	3.028	3.028	4.751	4.751	5.597	5.597	6.051	6.051	6.504	6.504
27	2.390	2.390	2.823	2.823	2.967	2.967	4.545	4.545	5.422	5.422	5.855	5.855	6.289	6.289
	FROST REGION													

Model: ACC20CR - ALC20CR
Cooling Mode

AFR (CFM)	EWB	EDB	Outdoor temperature																	
			19°C			25°C			30°C			35°C			40°C			46°C		
			TC	SHC	PI	TC	SHC	PI	TC	SHC	PI	TC	SHC	PI	TC	SHC	PI	TC	SHC	PI
590	16°C	21°C	5.43	3.28	1.76	5.23	3.20	1.76	5.03	3.12	1.80	4.83	3.03	1.84	4.61	2.94	1.96	4.34	2.83	2.13
		24°C	5.45	3.99	1.76	5.25	3.90	1.76	5.05	3.81	1.80	4.85	3.72	1.85	4.64	3.63	1.96	4.37	3.50	2.13
		27°C	5.52	4.61	1.76	5.34	4.49	1.77	5.16	4.37	1.80	4.98	4.24	1.85	4.79	4.09	1.98	4.57	3.91	2.15
		30°C	5.80	4.94	1.77	5.63	4.80	1.78	5.46	4.66	1.82	5.28	4.51	1.87	5.10	4.35	2.00	4.86	4.16	2.17
	19°C	24°C	5.97	3.27	1.78	5.76	3.19	1.79	5.54	3.11	1.83	5.32	3.03	1.88	5.09	2.94	2.00	4.80	2.83	2.17
		27°C	5.99	3.99	1.78	5.78	3.90	1.79	5.56	3.82	1.83	5.34	3.73	1.88	5.10	3.64	2.00	4.81	3.53	2.17
		30°C	6.02	4.67	1.78	5.81	4.57	1.79	5.60	4.48	1.83	5.38	4.37	1.88	5.16	4.26	2.00	4.89	4.12	2.17
		33°C	6.14	5.20	1.79	5.96	5.07	1.80	5.78	4.93	1.84	5.60	4.77	1.90	5.40	4.62	2.02	5.16	4.42	2.20
	22°C	27°C	6.56	3.24	1.81	6.32	3.16	1.82	6.09	3.08	1.86	5.85	3.00	1.91	5.60	2.92	2.04	5.28	2.82	2.21
		30°C	6.57	3.97	1.81	6.34	3.89	1.82	6.10	3.80	1.86	5.86	3.72	1.91	5.61	3.63	2.04	5.30	3.52	2.21
		33°C	6.59	4.66	1.81	6.36	4.57	1.82	6.12	4.49	1.86	5.88	4.40	1.92	5.63	4.31	2.04	5.33	4.19	2.21
		36°C	6.63	5.30	1.81	6.41	5.20	1.82	6.19	5.10	1.87	5.97	4.98	1.92	5.74	4.85	2.05	5.48	4.67	2.23
640	16°C	21°C	5.57	3.46	1.77	5.37	3.37	1.77	5.16	3.28	1.81	4.95	3.19	1.85	4.73	3.09	1.97	4.45	2.97	2.14
		24°C	5.59	4.20	1.77	5.39	4.10	1.77	5.18	4.01	1.81	4.97	3.91	1.86	4.75	3.81	1.97	4.48	3.68	2.14
		27°C	5.66	4.85	1.77	5.47	4.73	1.78	5.29	4.60	1.81	5.10	4.46	1.86	4.91	4.31	1.99	4.68	4.10	2.16
		30°C	5.95	5.20	1.78	5.78	5.05	1.79	5.60	4.90	1.83	5.42	4.74	1.88	5.22	4.58	2.01	4.98	4.37	2.18
	19°C	24°C	6.13	3.45	1.79	5.91	3.36	1.80	5.68	3.27	1.84	5.45	3.18	1.89	5.21	3.09	2.01	4.92	2.98	2.18
		27°C	6.15	4.21	1.79	5.93	4.11	1.80	5.70	4.02	1.84	5.47	3.92	1.89	5.23	3.83	2.01	4.94	3.71	2.18
		30°C	6.18	4.92	1.79	5.95	4.82	1.80	5.74	4.71	1.84	5.52	4.60	1.89	5.29	4.48	2.01	5.02	4.33	2.19
		33°C	6.30	5.48	1.80	6.11	5.34	1.81	5.93	5.19	1.85	5.74	5.02	1.91	5.54	4.85	2.03	5.29	4.64	2.21
	22°C	27°C	6.73	3.41	1.82	6.49	3.33	1.83	6.24	3.25	1.87	6.00	3.16	1.92	5.74	3.07	2.05	5.42	2.96	2.22
		30°C	6.74	4.19	1.82	6.50	4.10	1.83	6.26	4.01	1.87	6.01	3.91	1.92	5.75	3.82	2.05	5.43	3.70	2.22
		33°C	6.76	4.91	1.82	6.52	4.82	1.83	6.28	4.73	1.87	6.03	4.63	1.93	5.77	4.53	2.05	5.46	4.40	2.22
		36°C	6.81	5.59	1.82	6.57	5.48	1.83	6.35	5.37	1.88	6.12	5.24	1.93	5.89	5.10	2.06	5.61	4.91	2.24
670	16°C	21°C	5.67	3.59	1.77	5.46	3.50	1.78	5.25	3.40	1.81	5.04	3.30	1.86	4.81	3.20	1.98	4.53	3.07	2.15
		24°C	5.69	4.36	1.77	5.48	4.26	1.78	5.27	4.16	1.81	5.06	4.06	1.86	4.84	3.95	1.98	4.56	3.81	2.15
		27°C	5.76	5.03	1.78	5.57	4.91	1.78	5.38	4.77	1.82	5.19	4.62	1.87	5.00	4.46	1.99	4.76	4.25	2.17
		30°C	6.06	5.40	1.79	5.88	5.24	1.80	5.70	5.08	1.84	5.51	4.91	1.89	5.32	4.74	2.02	5.07	4.52	2.19
	19°C	24°C	6.24	3.58	1.80	6.01	3.48	1.80	5.79	3.39	1.84	5.55	3.30	1.89	5.31	3.20	2.01	5.00	3.08	2.18
		27°C	6.26	4.36	1.80	6.03	4.26	1.80	5.81	4.17	1.84	5.57	4.07	1.90	5.33	3.96	2.02	5.02	3.84	2.19
		30°C	6.29	5.10	1.80	6.06	5.00	1.81	5.84	4.89	1.85	5.62	4.77	1.90	5.39	4.64	2.02	5.11	4.48	2.19
		33°C	6.42	5.69	1.80	6.22	5.54	1.81	6.03	5.38	1.86	5.84	5.21	1.91	5.64	5.03	2.04	5.39	4.80	2.22
	22°C	27°C	6.85	3.54	1.82	6.60	3.45	1.83	6.36	3.36	1.88	6.10	3.27	1.93	5.84	3.18	2.05	5.51	3.06	2.23
		30°C	6.87	4.34	1.82	6.62	4.25	1.83	6.37	4.15	1.88	6.12	4.05	1.93	5.85	3.95	2.06	5.53	3.83	2.23
		33°C	6.89	5.09	1.82	6.64	5.00	1.84	6.39	4.90	1.88	6.13	4.80	1.93	5.88	4.69	2.06	5.56	4.56	2.23
		36°C	6.93	5.80	1.83	6.69	5.68	1.84	6.46	5.56	1.88	6.23	5.43	1.94	5.99	5.28	2.07	5.71	5.08	2.25

Remark:
AFR: Air flow rate (CFM)
EWB: Entering Wet Bulb Temp. (˚C)
EDB: Entering Dry Bulb Temp. (˚C)

TC: Total Cooling Capacity (kW)
SHC: Sensible Heat Capacity (kW)
PI: Power Input

Notes:
1. Ratings shown are gross capacities which do not include a deduction for indoor fan motor heat.
2. shows nominal capacities.
3. Direct interpolation is permissible. Do not extrapolate.

Heating Mode

ID DB°C	Outdoor WB°C													
	-9		-6		-5		6		12		15		18	
	TC(kW)	SC(kW)	TC(kW)	SC(kW)	TC(kW)	SC(kW)	TC(kW)	SC(kW)	TC(kW)	SC(kW)	TC(kW)	SC(kW)	TC(kW)	SC(kW)
15	2.506	2.506	3.124	3.124	3.330	3.330	5.597	5.597	6.834	6.834	7.452	7.452	8.071	8.071
17	2.446	2.446	3.062	3.062	3.267	3.267	5.574	5.574	6.648	6.648	7.245	7.245	7.841	7.841
19	2.386	2.386	2.999	2.999	3.204	3.204	5.550	5.550	6.462	6.462	7.037	7.037	7.612	7.612
21	2.326	2.326	2.937	2.937	3.140	3.140	5.527	5.527	6.276	6.276	6.829	6.829	7.382	7.382
23	2.319	2.319	2.887	2.887	3.077	3.077	5.258	5.258	6.089	6.089	6.621	6.621	7.153	7.153
25	2.311	2.311	2.838	2.838	3.014	3.014	4.990	4.990	5.903	5.903	6.413	6.413	6.923	6.923
27	2.304	2.304	2.789	2.789	2.951	2.951	4.722	4.722	5.717	5.717	6.205	6.205	6.694	6.694
	FROST REGION													

Model: ACC25CR - ALC25CR
Cooling Mode

AFR (CFM)	EWB	EDB	Outdoor temperature																	
			19°C			25°C			30°C			35°C			40°C			46°C		
			TC	SHC	PI	TC	SHC	PI	TC	SHC	PI	TC	SHC	PI	TC	SHC	PI	TC	SHC	PI
610	16°C	21°C	6.71	3.95	2.43	6.47	3.85	2.43	6.23	3.75	2.48	5.97	3.65	2.55	5.70	3.54	2.71	5.37	3.40	2.94
		24°C	6.74	4.80	2.43	6.50	4.69	2.43	6.25	4.58	2.48	6.00	4.48	2.55	5.73	4.36	2.71	5.41	4.21	2.94
		27°C	6.82	5.54	2.43	6.60	5.40	2.44	6.38	5.26	2.49	6.15	5.10	2.56	5.93	4.93	2.73	5.65	4.70	2.96
		30°C	7.17	5.94	2.45	6.97	5.77	2.46	6.75	5.60	2.51	6.53	5.42	2.59	6.30	5.24	2.76	6.01	5.00	3.00
	19°C	24°C	7.39	3.94	2.46	7.12	3.84	2.47	6.86	3.74	2.52	6.58	3.64	2.59	6.29	3.54	2.76	5.93	3.41	2.99
		27°C	7.41	4.80	2.46	7.15	4.70	2.47	6.88	4.59	2.52	6.60	4.49	2.59	6.31	4.38	2.76	5.96	4.24	2.99
		30°C	7.45	5.61	2.46	7.18	5.50	2.47	6.92	5.39	2.52	6.66	5.26	2.60	6.39	5.13	2.76	6.05	4.95	3.00
		33°C	7.60	6.26	2.47	7.37	6.10	2.48	7.15	5.93	2.54	6.92	5.74	2.62	6.68	5.55	2.79	6.39	5.31	3.04
	22°C	27°C	8.11	3.90	2.49	7.82	3.81	2.51	7.53	3.71	2.57	7.23	3.61	2.64	6.92	3.51	2.81	6.54	3.39	3.05
		30°C	8.13	4.78	2.49	7.84	4.68	2.51	7.55	4.58	2.57	7.25	4.47	2.64	6.94	4.37	2.81	6.55	4.24	3.05
		33°C	8.15	5.61	2.50	7.86	5.50	2.51	7.57	5.40	2.57	7.27	5.30	2.65	6.97	5.19	2.82	6.59	5.04	3.06
		36°C	8.21	6.38	2.50	7.93	6.26	2.52	7.66	6.13	2.58	7.38	5.99	2.65	7.10	5.83	2.83	6.77	5.62	3.08
760	16°C	21°C	6.89	4.16	2.44	6.64	4.05	2.44	6.38	3.95	2.49	6.12	3.84	2.56	5.85	3.72	2.72	5.51	3.57	2.95
		24°C	6.92	5.05	2.44	6.66	4.94	2.45	6.41	4.83	2.49	6.15	4.71	2.56	5.88	4.59	2.73	5.54	4.43	2.96
		27°C	7.00	5.84	2.44	6.77	5.69	2.45	6.54	5.54	2.50	6.31	5.37	2.57	6.08	5.18	2.74	5.79	4.94	2.98
		30°C	7.36	6.26	2.46	7.15	6.08	2.47	6.93	5.90	2.53	6.70	5.71	2.60	6.46	5.51	2.77	6.17	5.26	3.01
	19°C	24°C	7.58	4.15	2.47	7.31	4.04	2.48	7.03	3.94	2.53	6.75	3.83	2.60	6.45	3.72	2.77	6.08	3.58	3.01
		27°C	7.61	5.06	2.47	7.33	4.95	2.48	7.05	4.84	2.54	6.77	4.72	2.61	6.47	4.60	2.77	6.11	4.46	3.01
		30°C	7.64	5.92	2.47	7.37	5.79	2.48	7.10	5.67	2.54	6.83	5.54	2.61	6.55	5.40	2.78	6.21	5.20	3.02
		33°C	7.80	6.60	2.48	7.56	6.43	2.50	7.33	6.24	2.55	7.10	6.04	2.63	6.85	5.84	2.81	6.55	5.58	3.05
	22°C	27°C	8.32	4.11	2.51	8.02	4.01	2.52	7.72	3.91	2.58	7.42	3.80	2.66	7.10	3.69	2.83	6.70	3.56	3.07
		30°C	8.34	5.04	2.51	8.04	4.93	2.52	7.74	4.82	2.58	7.43	4.71	2.66	7.11	4.59	2.83	6.72	4.45	3.07
		33°C	8.37	5.91	2.51	8.07	5.80	2.53	7.77	5.69	2.58	7.46	5.57	2.66	7.14	5.45	2.83	6.75	5.30	3.07
		36°C	8.42	6.72	2.51	8.13	6.59	2.53	7.85	6.46	2.59	7.57	6.30	2.67	7.28	6.13	2.84	6.94	5.90	3.09
810	16°C	21°C	7.01	4.32	2.45	6.76	4.21	2.45	6.50	4.09	2.50	6.23	3.98	2.57	5.95	3.85	2.73	5.60	3.70	2.96
		24°C	7.04	5.24	2.45	6.78	5.12	2.45	6.52	5.00	2.50	6.26	4.88	2.57	5.98	4.75	2.73	5.64	4.58	2.97
		27°C	7.13	6.06	2.45	6.89	5.90	2.46	6.66	5.74	2.51	6.42	5.56	2.58	6.19	5.36	2.75	5.89	5.11	2.99
		30°C	7.49	6.49	2.47	7.27	6.30	2.48	7.05	6.11	2.54	6.82	5.91	2.61	6.58	5.70	2.78	6.27	5.44	3.02
	19°C	24°C	7.72	4.30	2.48	7.44	4.19	2.49	7.16	4.08	2.54	6.87	3.97	2.61	6.57	3.85	2.78	6.19	3.71	3.02
		27°C	7.74	5.25	2.48	7.46	5.13	2.49	7.18	5.01	2.54	6.89	4.89	2.62	6.59	4.77	2.78	6.21	4.61	3.02
		30°C	7.78	6.14	2.48	7.50	6.01	2.49	7.23	5.88	2.55	6.95	5.74	2.62	6.66	5.59	2.79	6.31	5.39	3.03
		33°C	7.94	6.84	2.49	7.70	6.66	2.50	7.46	6.47	2.56	7.22	6.26	2.64	6.98	6.05	2.82	6.66	5.78	3.06
	22°C	27°C	8.47	4.26	2.51	8.17	4.16	2.53	7.86	4.05	2.59	7.55	3.94	2.66	7.22	3.82	2.84	6.82	3.69	3.08
		30°C	8.49	5.23	2.52	8.19	5.11	2.53	7.88	4.99	2.59	7.57	4.88	2.67	7.24	4.76	2.84	6.84	4.61	3.08
		33°C	8.52	6.13	2.52	8.21	6.01	2.53	7.90	5.89	2.59	7.59	5.77	2.67	7.27	5.65	2.84	6.87	5.48	3.08
		36°C	8.57	6.97	2.52	8.28	6.83	2.54	7.99	6.69	2.60	7.70	6.53	2.68	7.41	6.35	2.85	7.07	6.11	3.10

Remark:
AFR: Air flow rate (CFM)
EWB: Entering Wet Bulb Temp. (˚C)
EDB: Entering Dry Bulb Temp. (˚C)

TC: Total Cooling Capacity (kW)
SHC: Sensible Heat Capacity (kW)
PI: Power Input

Notes:
1. Ratings shown are gross capacities which do not include a deduction for indoor fan motor heat.
2. shows nominal capacities.
3. Direct interpolation is permissible. Do not extrapolate.

Heating Mode

ID DB°C	Outdoor WB°C													
	-9		-6		-5		6		12		15		18	
	TC(kW)	SC(kW)	TC(kW)	SC(kW)	TC(kW)	SC(kW)	TC(kW)	SC(kW)	TC(kW)	SC(kW)	TC(kW)	SC(kW)	TC(kW)	SC(kW)
15	3.204	3.204	3.940	3.940	4.185	4.185	6.883	6.883	8.355	8.355	9.091	9.091	9.827	9.827
17	3.141	3.141	3.865	3.865	4.107	4.107	6.822	6.822	8.128	8.128	8.838	8.838	9.547	9.547
19	3.078	3.078	3.791	3.791	4.028	4.028	6.760	6.760	7.901	7.901	8.585	8.585	9.268	9.268
21	3.015	3.015	3.716	3.716	3.950	3.950	6.699	6.699	7.674	7.674	8.331	8.331	8.989	8.989
23	2.992	2.992	3.652	3.652	3.872	3.872	6.406	6.406	7.447	7.447	8.078	8.078	8.709	8.709
25	2.970	2.970	3.588	3.588	3.794	3.794	6.112	6.112	7.220	7.220	7.825	7.825	8.430	8.430
27	2.947	2.947	3.523	3.523	3.715	3.715	5.819	5.819	6.993	6.993	7.572	7.572	8.150	8.150
	FROST REGION													

Model: ACC28CR - ALC28CR
Cooling Mode

AFR (CFM)	EWB	EDB	Outdoor temperature																	
			19°C			25°C			30°C			35°C			40°C			46°C		
			TC	SHC	PI	TC	SHC	PI	TC	SHC	PI	TC	SHC	PI	TC	SHC	PI	TC	SHC	PI
710	16°C	21°C	7.71	4.41	2.73	7.43	4.30	2.73	7.15	4.19	2.79	6.86	4.07	2.86	6.55	3.95	3.05	6.17	3.80	3.30
		24°C	7.74	5.35	2.73	7.46	5.23	2.74	7.18	5.12	2.79	6.89	4.99	2.87	6.59	4.87	3.05	6.21	4.70	3.31
		27°C	7.84	6.18	2.73	7.58	6.03	2.74	7.33	5.87	2.80	7.07	5.69	2.88	6.81	5.50	3.07	6.49	5.25	3.33
		30°C	8.24	6.63	2.75	8.00	6.44	2.77	7.76	6.25	2.83	7.51	6.05	2.91	7.24	5.85	3.10	6.91	5.59	3.37
	19°C	24°C	8.49	4.39	2.76	8.18	4.28	2.78	7.88	4.17	2.83	7.56	4.06	2.91	7.23	3.95	3.10	6.81	3.80	3.36
		27°C	8.51	5.36	2.76	8.21	5.24	2.78	7.90	5.13	2.84	7.58	5.01	2.92	7.25	4.89	3.10	6.84	4.74	3.37
		30°C	8.55	6.27	2.77	8.25	6.14	2.78	7.95	6.01	2.84	7.65	5.87	2.92	7.33	5.73	3.11	6.95	5.53	3.38
		33°C	8.73	6.99	2.77	8.47	6.81	2.79	8.21	6.62	2.86	7.95	6.41	2.94	7.68	6.20	3.14	7.34	5.93	3.41
	22°C	27°C	9.31	4.35	2.80	8.98	4.25	2.82	8.65	4.14	2.89	8.31	4.03	2.97	7.95	3.92	3.16	7.51	3.78	3.43
		30°C	9.34	5.34	2.80	9.01	5.22	2.82	8.67	5.11	2.89	8.33	4.99	2.97	7.97	4.88	3.16	7.53	4.73	3.43
		33°C	9.36	6.26	2.81	9.03	6.14	2.83	8.70	6.03	2.89	8.35	5.91	2.98	8.00	5.79	3.17	7.57	5.63	3.44
		36°C	9.43	7.12	2.81	9.11	6.98	2.83	8.79	6.84	2.90	8.48	6.69	2.98	8.16	6.51	3.18	7.78	6.27	3.46
770	16°C	21°C	7.91	4.65	2.74	7.62	4.53	2.75	7.33	4.41	2.80	7.03	4.28	2.88	6.72	4.15	3.06	6.32	3.99	3.32
		24°C	7.95	5.64	2.74	7.65	5.51	2.75	7.36	5.39	2.81	7.06	5.26	2.88	6.75	5.12	3.06	6.37	4.94	3.32
		27°C	8.04	6.52	2.75	7.78	6.35	2.76	7.51	6.18	2.81	7.25	5.99	2.89	6.98	5.78	3.08	6.65	5.51	3.35
		30°C	8.45	6.99	2.77	8.21	6.78	2.78	7.95	6.58	2.84	7.70	6.37	2.93	7.42	6.15	3.12	7.08	5.87	3.39
	19°C	24°C	8.71	4.63	2.78	8.39	4.51	2.79	8.08	4.39	2.85	7.75	4.27	2.93	7.41	4.15	3.12	6.99	4.00	3.38
		27°C	8.74	5.65	2.78	8.42	5.52	2.79	8.10	5.40	2.85	7.78	5.27	2.93	7.43	5.14	3.12	7.01	4.98	3.38
		30°C	8.77	6.60	2.78	8.46	6.47	2.79	8.15	6.33	2.85	7.84	6.18	2.94	7.52	6.02	3.13	7.13	5.81	3.39
		33°C	8.95	7.36	2.79	8.68	7.17	2.81	8.42	6.97	2.87	8.15	6.75	2.96	7.87	6.52	3.16	7.52	6.23	3.43
	22°C	27°C	9.56	4.58	2.82	9.22	4.47	2.84	8.87	4.36	2.90	8.52	4.24	2.99	8.15	4.12	3.18	7.70	3.97	3.45
		30°C	9.58	5.62	2.82	9.24	5.50	2.84	8.89	5.38	2.90	8.54	5.25	2.99	8.17	5.13	3.18	7.72	4.97	3.45
		33°C	9.61	6.59	2.82	9.27	6.47	2.84	8.92	6.35	2.91	8.56	6.22	2.99	8.20	6.09	3.18	7.76	5.91	3.45
		36°C	9.67	7.50	2.82	9.34	7.36	2.84	9.02	7.20	2.91	8.69	7.04	3.00	8.36	6.85	3.20	7.97	6.59	3.48
810	16°C	21°C	8.05	4.82	2.75	7.76	4.69	2.76	7.46	4.57	2.81	7.15	4.44	2.89	6.83	4.30	3.07	6.43	4.13	3.33
		24°C	8.09	5.85	2.75	7.79	5.72	2.76	7.49	5.58	2.82	7.19	5.45	2.89	6.87	5.30	3.08	6.48	5.11	3.34
		27°C	8.18	6.76	2.76	7.91	6.59	2.77	7.65	6.41	2.82	7.38	6.21	2.90	7.10	5.99	3.09	6.77	5.70	3.36
		30°C	8.60	7.25	2.78	8.35	7.04	2.79	8.10	6.82	2.85	7.83	6.60	2.94	7.55	6.37	3.13	7.21	6.07	3.40
	19°C	24°C	8.86	4.80	2.79	8.54	4.68	2.80	8.22	4.56	2.86	7.89	4.43	2.94	7.54	4.30	3.13	7.11	4.14	3.39
		27°C	8.89	5.86	2.79	8.57	5.73	2.80	8.25	5.59	2.86	7.91	5.46	2.94	7.57	5.32	3.13	7.14	5.15	3.40
		30°C	8.93	6.85	2.79	8.61	6.71	2.80	8.30	6.56	2.87	7.98	6.40	2.95	7.65	6.24	3.14	7.25	6.01	3.41
		33°C	9.11	7.64	2.80	8.84	7.44	2.82	8.57	7.22	2.88	8.30	6.99	2.97	8.01	6.75	3.17	7.65	6.45	3.44
	22°C	27°C	9.73	4.76	2.83	9.38	4.64	2.85	9.03	4.52	2.91	8.67	4.40	3.00	8.30	4.27	3.19	7.83	4.11	3.46
		30°C	9.75	5.83	2.83	9.40	5.70	2.85	9.05	5.58	2.91	8.69	5.44	3.00	8.32	5.31	3.19	7.85	5.14	3.46
		33°C	9.78	6.84	2.83	9.43	6.71	2.85	9.08	6.58	2.92	8.72	6.44	3.00	8.35	6.30	3.20	7.89	6.12	3.47
		36°C	9.85	7.78	2.83	9.51	7.63	2.85	9.18	7.47	2.92	8.84	7.29	3.01	8.51	7.09	3.21	8.12	6.82	3.49
850	16°C	21°C	8.15	4.94	2.76	7.85	4.81	2.76	7.55	4.68	2.82	7.24	4.54	2.90	6.91	4.40	3.08	6.51	4.22	3.34
		24°C	8.18	6.00	2.76	7.88	5.86	2.77	7.58	5.72	2.82	7.27	5.57	2.90	6.95	5.42	3.08	6.55	5.23	3.34
		27°C	8.28	6.93	2.76	8.01	6.75	2.77	7.74	6.56	2.83	7.46	6.36	2.91	7.19	6.13	3.10	6.85	5.83	3.37
		30°C	8.71	7.43	2.78	8.45	7.21	2.80	8.19	6.99	2.86	7.92	6.75	2.94	7.64	6.51	3.14	7.29	6.21	3.41
	19°C	24°C	8.97	4.92	2.79	8.64	4.79	2.81	8.32	4.67	2.87	7.98	4.53	2.95	7.63	4.40	3.13	7.19	4.23	3.40
		27°C	9.00	6.00	2.79	8.67	5.87	2.81	8.34	5.73	2.87	8.01	5.59	2.95	7.65	5.45	3.14	7.22	5.27	3.40
		30°C	9.04	7.02	2.80	8.71	6.87	2.81	8.40	6.72	2.87	8.07	6.56	2.95	7.74	6.38	3.14	7.34	6.15	3.41
		33°C	9.22	7.83	2.80	8.94	7.62	2.82	8.67	7.40	2.89	8.39	7.15	2.98	8.10	6.91	3.17	7.74	6.60	3.45
	22°C	27°C	9.84	4.87	2.83	9.49	4.75	2.85	9.13	4.63	2.92	8.77	4.50	3.00	8.39	4.37	3.20	7.92	4.21	3.47
		30°C	9.87	5.98	2.84	9.51	5.84	2.85	9.16	5.71	2.92	8.79	5.57	3.01	8.41	5.43	3.20	7.95	5.26	3.47
		33°C	9.90	7.01	2.84	9.54	6.87	2.86	9.18	6.74	2.92	8.82	6.60	3.01	8.45	6.45	3.20	7.99	6.26	3.47
		36°C	9.96	7.98	2.84	9.62	7.81	2.86	9.28	7.65	2.93	8.95	7.46	3.02	8.61	7.26	3.22	8.21	6.97	3.50

Remark:
AFR: Air flow rate (CFM)
EWB: Entering Wet Bulb Temp. (˚C)
EDB: Entering Dry Bulb Temp. (˚C)
TC: Total Cooling Capacity (kW)
SHC: Sensible Heat Capacity (kW)
PI: Power Input

Notes:
1. Ratings shown are gross capacities which do not include a deduction for indoor fan motor heat.
2. shows nominal capacities.
3. Direct interpolation is permissible. Do not extrapolate.

Heating Mode

ID DB°C	Outdoor WB°C													
	-9		-6		-5		6		12		15		18	
	TC(kW)	SC(kW)	TC(kW)	SC(kW)	TC(kW)	SC(kW)	TC(kW)	SC(kW)	TC(kW)	SC(kW)	TC(kW)	SC(kW)	TC(kW)	SC(kW)
15	3.629	3.629	4.552	4.552	4.859	4.859	8.241	8.241	10.085	10.085	11.008	11.008	11.930	11.930
17	3.536	3.536	4.459	4.459	4.766	4.766	8.099	8.099	9.810	9.810	10.700	10.700	11.590	11.590
19	3.443	3.443	4.366	4.366	4.673	4.673	7.957	7.957	9.535	9.535	10.393	10.393	11.251	11.251
21	3.350	3.350	4.273	4.273	4.580	4.580	7.816	7.816	9.260	9.260	10.086	10.086	10.912	10.912
23	3.345	3.345	4.202	4.202	4.487	4.487	7.532	7.532	8.985	8.985	9.779	9.779	10.573	10.573
25	3.340	3.340	4.131	4.131	4.395	4.395	7.249	7.249	8.710	8.710	9.472	9.472	10.233	10.233
27	3.336	3.336	4.060	4.060	4.302	4.302	6.965	6.965	8.435	8.435	9.165	9.165	9.894	9.894
	FROST REGION													

Model: ACC28CR - ALC~~30CR~~ 30DR

Cooling Mode

AFR (CFM)	EWB	EDB	Outdoor temperature																	
			19°C			25°C			30°C			35°C			40°C			46°C		
			TC	SHC	PI	TC	SHC	PI	TC	SHC	PI	TC	SHC	PI	TC	SHC	PI	TC	SHC	PI
710	16°C	21°C	8.00	4.57	2.62	7.71	4.46	2.62	7.41	4.34	2.67	7.11	4.22	2.75	6.79	4.10	2.92	6.40	3.94	3.17
		24°C	8.03	5.55	2.62	7.74	5.43	2.62	7.44	5.31	2.68	7.14	5.18	2.75	6.83	5.05	2.92	6.44	4.88	3.17
		27°C	8.13	6.41	2.62	7.86	6.26	2.63	7.60	6.09	2.68	7.33	5.91	2.76	7.06	5.70	2.94	6.73	5.44	3.20
		30°C	8.54	6.88	2.64	8.30	6.68	2.65	8.04	6.48	2.71	7.78	6.28	2.79	7.51	6.06	2.97	7.16	5.79	3.23
	19°C	24°C	8.80	4.56	2.65	8.49	4.44	2.66	8.17	4.33	2.72	7.84	4.21	2.79	7.49	4.09	2.97	7.07	3.95	3.22
		27°C	8.83	5.56	2.65	8.51	5.44	2.66	8.19	5.32	2.72	7.86	5.19	2.80	7.52	5.07	2.98	7.09	4.91	3.23
		30°C	8.87	6.50	2.65	8.55	6.37	2.66	8.25	6.24	2.72	7.93	6.09	2.80	7.61	5.94	2.98	7.21	5.73	3.24
		33°C	9.05	7.25	2.66	8.78	7.06	2.68	8.52	6.86	2.74	8.25	6.65	2.82	7.96	6.43	3.01	7.61	6.15	3.27
	22°C	27°C	9.66	4.51	2.69	9.32	4.40	2.71	8.97	4.29	2.77	8.61	4.18	2.85	8.24	4.07	3.03	7.78	3.92	3.29
		30°C	9.68	5.53	2.69	9.34	5.42	2.71	8.99	5.30	2.77	8.64	5.18	2.85	8.27	5.06	3.03	7.81	4.91	3.29
		33°C	9.71	6.49	2.69	9.37	6.37	2.71	9.02	6.25	2.77	8.66	6.13	2.85	8.30	6.00	3.04	7.85	5.84	3.29
		36°C	9.77	7.39	2.69	9.44	7.24	2.71	9.12	7.10	2.78	8.79	6.94	2.86	8.46	6.75	3.05	8.07	6.50	3.32
770	16°C	21°C	8.21	4.82	2.63	7.91	4.69	2.64	7.60	4.57	2.69	7.29	4.44	2.76	6.96	4.31	2.94	6.56	4.14	3.18
		24°C	8.24	5.85	2.63	7.94	5.72	2.64	7.63	5.59	2.69	7.32	5.45	2.76	7.00	5.31	2.94	6.60	5.12	3.19
		27°C	8.34	6.76	2.63	8.06	6.59	2.64	7.79	6.41	2.70	7.52	6.21	2.77	7.24	6.00	2.96	6.90	5.71	3.21
		30°C	8.77	7.25	2.65	8.51	7.04	2.67	8.25	6.82	2.73	7.98	6.60	2.81	7.70	6.37	2.99	7.34	6.09	3.25
	19°C	24°C	9.03	4.80	2.66	8.70	4.68	2.67	8.37	4.56	2.73	8.04	4.43	2.81	7.68	4.30	2.99	7.25	4.15	3.24
		27°C	9.06	5.86	2.66	8.73	5.73	2.68	8.40	5.60	2.73	8.06	5.46	2.81	7.71	5.33	2.99	7.27	5.16	3.24
		30°C	9.10	6.85	2.67	8.77	6.71	2.68	8.46	6.57	2.74	8.13	6.41	2.81	7.80	6.24	3.00	7.39	6.02	3.25
		33°C	9.28	7.63	2.67	9.00	7.44	2.69	8.73	7.22	2.75	8.45	7.00	2.84	8.16	6.76	3.03	7.80	6.46	3.29
	22°C	27°C	9.91	4.75	2.70	9.56	4.64	2.72	9.20	4.52	2.78	8.83	4.40	2.86	8.45	4.28	3.05	7.98	4.12	3.31
		30°C	9.94	5.83	2.70	9.58	5.70	2.72	9.22	5.58	2.78	8.85	5.45	2.87	8.47	5.32	3.05	8.00	5.15	3.31
		33°C	9.96	6.84	2.70	9.61	6.71	2.72	9.25	6.58	2.79	8.88	6.45	2.87	8.51	6.31	3.05	8.04	6.13	3.31
		36°C	10.03	7.78	2.71	9.69	7.63	2.73	9.35	7.47	2.79	9.01	7.30	2.88	8.67	7.10	3.07	8.27	6.83	3.33
810	16°C	21°C	8.35	5.00	2.64	8.05	4.87	2.65	7.74	4.74	2.70	7.42	4.60	2.77	7.09	4.46	2.95	6.67	4.28	3.20
		24°C	8.39	6.07	2.64	8.08	5.93	2.65	7.77	5.79	2.70	7.45	5.65	2.77	7.13	5.50	2.95	6.72	5.30	3.20
		27°C	8.49	7.01	2.64	8.21	6.83	2.65	7.93	6.64	2.71	7.65	6.44	2.78	7.37	6.21	2.97	7.02	5.91	3.22
		30°C	8.92	7.52	2.66	8.66	7.30	2.68	8.40	7.07	2.74	8.12	6.84	2.82	7.83	6.60	3.00	7.47	6.30	3.26
	19°C	24°C	9.19	4.98	2.67	8.86	4.85	2.68	8.52	4.72	2.74	8.18	4.59	2.82	7.82	4.46	3.00	7.37	4.29	3.25
		27°C	9.22	6.07	2.67	8.89	5.94	2.69	8.55	5.80	2.74	8.21	5.66	2.82	7.85	5.52	3.00	7.40	5.34	3.26
		30°C	9.26	7.10	2.68	8.93	6.96	2.69	8.61	6.81	2.75	8.28	6.64	2.83	7.94	6.47	3.01	7.52	6.23	3.27
		33°C	9.45	7.92	2.68	9.17	7.71	2.70	8.89	7.49	2.76	8.60	7.25	2.85	8.31	7.00	3.04	7.94	6.69	3.30
	22°C	27°C	10.09	4.93	2.71	9.73	4.81	2.73	9.36	4.69	2.79	8.99	4.56	2.87	8.60	4.43	3.06	8.12	4.27	3.32
		30°C	10.12	6.05	2.71	9.75	5.91	2.73	9.39	5.78	2.79	9.01	5.65	2.88	8.62	5.51	3.06	8.14	5.33	3.32
		33°C	10.14	7.09	2.71	9.78	6.96	2.73	9.41	6.82	2.80	9.04	6.68	2.88	8.66	6.54	3.06	8.18	6.35	3.32
		36°C	10.21	8.07	2.72	9.86	7.91	2.74	9.52	7.74	2.80	9.17	7.56	2.89	8.83	7.35	3.08	8.42	7.07	3.35
850	16°C	21°C	8.45	5.12	2.64	8.14	4.99	2.65	7.83	4.85	2.70	7.51	4.71	2.78	7.17	4.56	2.95	6.75	4.38	3.20
		24°C	8.49	6.22	2.65	8.17	6.07	2.65	7.86	5.93	2.71	7.54	5.78	2.78	7.21	5.63	2.96	6.80	5.42	3.20
		27°C	8.59	7.18	2.65	8.30	7.00	2.66	8.02	6.80	2.71	7.74	6.59	2.79	7.45	6.35	2.97	7.10	6.05	3.23
		30°C	9.03	7.70	2.67	8.76	7.47	2.68	8.49	7.24	2.74	8.22	7.00	2.82	7.93	6.76	3.01	7.56	6.44	3.27
	19°C	24°C	9.30	5.10	2.68	8.96	4.97	2.69	8.62	4.84	2.75	8.27	4.70	2.83	7.91	4.56	3.01	7.46	4.39	3.26
		27°C	9.33	6.22	2.68	8.99	6.08	2.69	8.65	5.94	2.75	8.30	5.80	2.83	7.94	5.65	3.01	7.49	5.46	3.26
		30°C	9.37	7.28	2.68	9.03	7.13	2.69	8.71	6.97	2.75	8.37	6.80	2.83	8.03	6.62	3.01	7.61	6.38	3.27
		33°C	9.56	8.12	2.69	9.27	7.90	2.71	8.99	7.67	2.77	8.71	7.42	2.85	8.40	7.16	3.04	8.03	6.84	3.31
	22°C	27°C	10.21	5.05	2.72	9.84	4.93	2.74	9.47	4.80	2.80	9.10	4.67	2.88	8.70	4.53	3.07	8.22	4.36	3.32
		30°C	10.23	6.20	2.72	9.87	6.06	2.74	9.50	5.92	2.80	9.12	5.78	2.88	8.73	5.63	3.07	8.24	5.46	3.33
		33°C	10.26	7.27	2.72	9.89	7.13	2.74	9.52	6.99	2.80	9.14	6.84	2.88	8.76	6.69	3.07	8.28	6.49	3.33
		36°C	10.33	8.27	2.72	9.97	8.10	2.74	9.63	7.93	2.81	9.28	7.74	2.89	8.93	7.52	3.08	8.52	7.23	3.35

Remark:
AFR: Air flow rate (CFM)
EWB: Entering Wet Bulb Temp. (˚C)
EDB: Entering Dry Bulb Temp. (˚C)
TC: Total Cooling Capacity (kW)
SHC: Sensible Heat Capacity (kW)
PI: Power Input

Notes:
1. Ratings shown are gross capacities which do not include a deduction for indoor fan motor heat.
2. shows nominal capacities.
3. Direct interpolation is permissible. Do not extrapolate.

Heating Mode

ID DB°C	Outdoor WB°C													
	-9		-6		-5		6		12		15		18	
	TC(kW)	SC(kW)	TC(kW)	SC(kW)	TC(kW)	SC(kW)	TC(kW)	SC(kW)	TC(kW)	SC(kW)	TC(kW)	SC(kW)	TC(kW)	SC(kW)
15	**3.942**	**3.942**	**4.829**	**4.829**	**5.125**	**5.125**	**8.381**	**8.381**	**10.157**	**10.157**	**11.045**	**11.045**	**11.933**	**11.933**
17	3.868	3.868	4.740	4.740	5.030	5.030	8.379	8.379	9.882	9.882	10.738	10.738	11.594	11.594
19	3.795	3.795	4.650	4.650	4.935	4.935	8.376	8.376	9.606	9.606	10.430	10.430	11.255	11.255
21	3.722	3.722	4.560	4.560	4.839	4.839	8.374	8.374	9.330	9.330	10.123	10.123	10.915	10.915
23	3.690	3.690	4.480	4.480	4.744	4.744	7.941	7.941	9.054	9.054	9.815	9.815	10.576	10.576
25	3.658	3.658	4.401	4.401	4.648	4.648	7.508	7.508	8.779	8.779	9.508	9.508	10.237	10.237
27	3.627	3.627	4.321	4.321	4.553	4.553	7.076	7.076	8.503	8.503	9.200	9.200	9.897	9.897
	FROST REGION													

Model: ACC28CR - ALC~~30CR~~ (3 Phase)

Cooling Mode

30DR

AFR (CFM)	EWB	EDB	Outdoor temperature																	
			19°C			25°C			30°C			35°C			40°C			46°C		
			TC	SHC	PI	TC	SHC	PI	TC	SHC	PI	TC	SHC	PI	TC	SHC	PI	TC	SHC	PI
710	16°C	21°C	8.00	4.57	2.76	7.71	4.46	2.77	7.41	4.34	2.83	7.11	4.22	2.90	6.79	4.10	3.09	6.40	3.94	3.35
		24°C	8.03	5.55	2.77	7.74	5.43	2.77	7.44	5.31	2.83	7.14	5.18	2.90	6.83	5.05	3.09	6.44	4.88	3.35
		27°C	8.13	6.41	2.77	7.86	6.26	2.78	7.60	6.09	2.84	7.33	5.91	2.92	7.06	5.70	3.11	6.73	5.44	3.38
		30°C	8.54	6.88	2.79	8.30	6.68	2.80	8.04	6.48	2.86	7.78	6.28	2.95	7.51	6.06	3.14	7.16	5.79	3.42
	19°C	24°C	8.80	4.56	2.80	8.49	4.44	2.81	8.17	4.33	2.87	7.84	4.21	2.95	7.49	4.09	3.14	7.07	3.95	3.41
		27°C	8.83	5.56	2.80	8.51	5.44	2.81	8.19	5.32	2.87	7.86	5.19	2.95	7.52	5.07	3.14	7.09	4.91	3.41
		30°C	8.87	6.50	2.80	8.55	6.37	2.82	8.25	6.24	2.88	7.93	6.09	2.96	7.61	5.94	3.15	7.21	5.73	3.42
		33°C	9.05	7.25	2.81	8.78	7.06	2.83	8.52	6.86	2.90	8.25	6.65	2.98	7.96	6.43	3.18	7.61	6.15	3.46
	22°C	27°C	9.66	4.51	2.84	9.32	4.40	2.86	8.97	4.29	2.92	8.61	4.18	3.01	8.24	4.07	3.20	7.78	3.92	3.47
		30°C	9.68	5.53	2.84	9.34	5.42	2.86	8.99	5.30	2.93	8.64	5.18	3.01	8.27	5.06	3.21	7.81	4.91	3.48
		33°C	9.71	6.49	2.84	9.37	6.37	2.86	9.02	6.25	2.93	8.66	6.13	3.01	8.30	6.00	3.21	7.85	5.84	3.48
		36°C	9.77	7.39	2.85	9.44	7.24	2.87	9.12	7.10	2.93	8.79	6.94	3.02	8.46	6.75	3.22	8.07	6.50	3.50
770	16°C	21°C	8.21	4.82	2.78	7.91	4.69	2.78	7.60	4.57	2.84	7.29	4.44	2.92	6.96	4.31	3.10	6.56	4.14	3.36
		24°C	8.24	5.85	2.78	7.94	5.72	2.79	7.63	5.59	2.84	7.32	5.45	2.92	7.00	5.31	3.11	6.60	5.12	3.37
		27°C	8.34	6.76	2.78	8.06	6.59	2.79	7.79	6.41	2.85	7.52	6.21	2.93	7.24	6.00	3.12	6.90	5.71	3.39
		30°C	8.77	7.25	2.80	8.51	7.04	2.82	8.25	6.82	2.88	7.98	6.60	2.96	7.70	6.37	3.16	7.34	6.09	3.43
	19°C	24°C	9.03	4.80	2.81	8.70	4.68	2.83	8.37	4.56	2.89	8.04	4.43	2.97	7.68	4.30	3.16	7.25	4.15	3.42
		27°C	9.06	5.86	2.82	8.73	5.73	2.83	8.40	5.60	2.89	8.06	5.46	2.97	7.71	5.33	3.16	7.27	5.16	3.43
		30°C	9.10	6.85	2.82	8.77	6.71	2.83	8.46	6.57	2.89	8.13	6.41	2.97	7.80	6.24	3.17	7.39	6.02	3.44
		33°C	9.28	7.63	2.83	9.00	7.44	2.84	8.73	7.22	2.91	8.45	7.00	3.00	8.16	6.76	3.20	7.80	6.46	3.48
	22°C	27°C	9.91	4.75	2.86	9.56	4.64	2.87	9.20	4.52	2.94	8.83	4.40	3.03	8.45	4.28	3.22	7.98	4.12	3.49
		30°C	9.94	5.83	2.86	9.58	5.70	2.88	9.22	5.58	2.94	8.85	5.45	3.03	8.47	5.32	3.22	8.00	5.15	3.50
		33°C	9.96	6.84	2.86	9.61	6.71	2.88	9.25	6.58	2.94	8.88	6.45	3.03	8.51	6.31	3.23	8.04	6.13	3.50
		36°C	10.03	7.78	2.86	9.69	7.63	2.88	9.35	7.47	2.95	9.01	7.30	3.04	8.67	7.10	3.24	8.27	6.83	3.52
810	16°C	21°C	8.35	5.00	2.79	8.05	4.87	2.80	7.74	4.74	2.85	7.42	4.60	2.93	7.09	4.46	3.11	6.67	4.28	3.38
		24°C	8.39	6.07	2.79	8.08	5.93	2.80	7.77	5.79	2.85	7.45	5.65	2.93	7.13	5.50	3.12	6.72	5.30	3.38
		27°C	8.49	7.01	2.79	8.21	6.83	2.80	7.93	6.64	2.86	7.65	6.44	2.94	7.37	6.21	3.13	7.02	5.91	3.41
		30°C	8.92	7.52	2.81	8.66	7.30	2.83	8.40	7.07	2.89	8.12	6.84	2.98	7.83	6.60	3.17	7.47	6.30	3.45
	19°C	24°C	9.19	4.98	2.82	8.86	4.85	2.84	8.52	4.72	2.90	8.18	4.59	2.98	7.82	4.46	3.17	7.37	4.29	3.44
		27°C	9.22	6.07	2.83	8.89	5.94	2.84	8.55	5.80	2.90	8.21	5.66	2.98	7.85	5.52	3.17	7.40	5.34	3.44
		30°C	9.26	7.10	2.83	8.93	6.96	2.84	8.61	6.81	2.90	8.28	6.64	2.99	7.94	6.47	3.18	7.52	6.23	3.45
		33°C	9.45	7.92	2.84	9.17	7.71	2.85	8.89	7.49	2.92	8.60	7.25	3.01	8.31	7.00	3.21	7.94	6.69	3.49
	22°C	27°C	10.09	4.93	2.87	9.73	4.81	2.88	9.36	4.69	2.95	8.99	4.56	3.04	8.60	4.43	3.23	8.12	4.27	3.50
		30°C	10.12	6.05	2.87	9.75	5.91	2.89	9.39	5.78	2.95	9.01	5.65	3.04	8.62	5.51	3.23	8.14	5.33	3.51
		33°C	10.14	7.09	2.87	9.78	6.96	2.89	9.41	6.82	2.96	9.04	6.68	3.04	8.66	6.54	3.24	8.18	6.35	3.51
		36°C	10.21	8.07	2.87	9.86	7.91	2.89	9.52	7.74	2.96	9.17	7.56	3.05	8.83	7.35	3.25	8.42	7.07	3.53
850	16°C	21°C	8.45	5.12	2.79	8.14	4.99	2.80	7.83	4.85	2.86	7.51	4.71	2.93	7.17	4.56	3.12	6.75	4.38	3.38
		24°C	8.49	6.22	2.80	8.17	6.07	2.80	7.86	5.93	2.86	7.54	5.78	2.94	7.21	5.63	3.12	6.80	5.42	3.39
		27°C	8.59	7.18	2.80	8.30	7.00	2.81	8.02	6.80	2.87	7.74	6.59	2.95	7.45	6.35	3.14	7.10	6.05	3.41
		30°C	9.03	7.70	2.82	8.76	7.47	2.83	8.49	7.24	2.90	8.22	7.00	2.98	7.93	6.76	3.18	7.56	6.44	3.45
	19°C	24°C	9.30	5.10	2.83	8.96	4.97	2.84	8.62	4.84	2.90	8.27	4.70	2.99	7.91	4.56	3.18	7.46	4.39	3.44
		27°C	9.33	6.22	2.83	8.99	6.08	2.85	8.65	5.94	2.91	8.30	5.80	2.99	7.94	5.65	3.18	7.49	5.46	3.45
		30°C	9.37	7.28	2.83	9.03	7.13	2.85	8.71	6.97	2.91	8.37	6.80	2.99	8.03	6.62	3.19	7.61	6.38	3.46
		33°C	9.56	8.12	2.84	9.27	7.90	2.86	8.99	7.67	2.93	8.71	7.42	3.02	8.40	7.16	3.22	8.03	6.84	3.50
	22°C	27°C	10.21	5.05	2.87	9.84	4.93	2.89	9.47	4.80	2.96	9.10	4.67	3.04	8.70	4.53	3.24	8.22	4.36	3.51
		30°C	10.23	6.20	2.87	9.87	6.06	2.89	9.50	5.92	2.96	9.12	5.78	3.05	8.73	5.63	3.24	8.24	5.46	3.52
		33°C	10.26	7.27	2.87	9.89	7.13	2.89	9.52	6.99	2.96	9.14	6.84	3.05	8.76	6.69	3.24	8.28	6.49	3.52
		36°C	10.33	8.27	2.88	9.97	8.10	2.90	9.63	7.93	2.97	9.28	7.74	3.06	8.93	7.52	3.26	8.52	7.23	3.54

Remark:
AFR: Air flow rate (CFM)
EWB: Entering Wet Bulb Temp. (˚C)
EDB: Entering Dry Bulb Temp. (˚C)

TC: Total Cooling Capacity (kW)
SHC: Sensible Heat Capacity (kW)
PI: Power Input

Notes:
1. Ratings shown are gross capacities which do not include a deduction for indoor fan motor heat.
2. shows nominal capacities.
3. Direct interpolation is permissible. Do not extrapolate.

Heating Mode

ID DB°C	Outdoor WB°C													
	-9		-6		-5		6		12		15		18	
	TC(kW)	SC(kW)	TC(kW)	SC(kW)	TC(kW)	SC(kW)	TC(kW)	SC(kW)	TC(kW)	SC(kW)	TC(kW)	SC(kW)	TC(kW)	SC(kW)
15	3.942	3.942	4.829	4.829	5.125	5.125	8.381	8.381	10.157	10.157	11.045	11.045	11.933	11.933
17	3.868	3.868	4.740	4.740	5.030	5.030	8.379	8.379	9.882	9.882	10.738	10.738	11.594	11.594
19	3.795	3.795	4.650	4.650	4.935	4.935	8.376	8.376	9.606	9.606	10.430	10.430	11.255	11.255
21	3.722	3.722	4.560	4.560	4.839	4.839	8.374	8.374	9.330	9.330	10.123	10.123	10.915	10.915
23	3.690	3.690	4.480	4.480	4.744	4.744	7.941	7.941	9.054	9.054	9.815	9.815	10.576	10.576
25	3.658	3.658	4.401	4.401	4.648	4.648	7.508	7.508	8.779	8.779	9.508	9.508	10.237	10.237
27	3.627	3.627	4.321	4.321	4.553	4.553	7.076	7.076	8.503	8.503	9.200	9.200	9.897	9.897
	FROST REGION													

Model: ACC30CR - ALC28CR
Cooling Mode

AFR (CFM)	EWB	EDB	Outdoor temperature																	
			19°C			25°C			30°C			35°C			40°C			46°C		
			TC	SHC	PI	TC	SHC	PI	TC	SHC	PI	TC	SHC	PI	TC	SHC	PI	TC	SHC	PI
710	16°C	21°C	8.38	5.49	2.78	8.08	5.35	2.79	7.77	5.21	2.84	7.45	5.07	2.92	7.12	4.92	3.10	6.70	4.73	3.37
		24°C	8.42	6.66	2.78	8.11	6.51	2.79	7.80	6.37	2.84	7.49	6.22	2.92	7.16	6.06	3.11	6.75	5.85	3.37
		27°C	8.52	7.70	2.78	8.24	7.51	2.79	7.97	7.31	2.85	7.68	7.09	2.93	7.40	6.84	3.12	7.05	6.53	3.39
		30°C	8.95	8.25	2.80	8.70	8.02	2.82	8.43	7.78	2.88	8.16	7.53	2.96	7.87	7.27	3.16	7.51	6.95	3.44
	19°C	24°C	9.22	5.47	2.81	8.89	5.33	2.83	8.56	5.20	2.89	8.22	5.06	2.97	7.86	4.91	3.16	7.41	4.74	3.43
		27°C	9.26	6.67	2.82	8.92	6.52	2.83	8.59	6.38	2.89	8.24	6.23	2.97	7.88	6.08	3.16	7.44	5.90	3.43
		30°C	9.30	7.80	2.82	8.97	7.64	2.83	8.64	7.48	2.89	8.31	7.31	2.97	7.97	7.13	3.17	7.56	6.88	3.44
		33°C	9.49	8.70	2.83	9.20	8.47	2.84	8.93	8.24	2.91	8.64	7.98	3.00	8.35	7.71	3.20	7.97	7.38	3.48
	22°C	27°C	10.13	5.42	2.86	9.77	5.29	2.87	9.40	5.15	2.94	9.03	5.02	3.03	8.64	4.88	3.22	8.16	4.71	3.49
		30°C	10.15	6.64	2.86	9.79	6.50	2.88	9.43	6.36	2.94	9.05	6.22	3.03	8.66	6.07	3.22	8.18	5.89	3.50
		33°C	10.18	7.79	2.86	9.82	7.64	2.88	9.45	7.50	2.94	9.08	7.36	3.03	8.70	7.20	3.23	8.22	7.01	3.50
		36°C	10.25	8.86	2.86	9.90	8.69	2.88	9.56	8.52	2.95	9.21	8.32	3.04	8.87	8.10	3.24	8.46	7.80	3.52
760	16°C	21°C	8.60	5.78	2.79	8.29	5.63	2.80	7.97	5.48	2.86	7.64	5.33	2.93	7.30	5.17	3.12	6.87	4.97	3.38
		24°C	8.64	7.02	2.79	8.32	6.86	2.80	8.00	6.71	2.86	7.68	6.54	2.93	7.34	6.37	3.12	6.92	6.15	3.39
		27°C	8.74	8.11	2.80	8.45	7.91	2.81	8.17	7.69	2.87	7.88	7.46	2.95	7.59	7.20	3.14	7.23	6.86	3.41
		30°C	9.19	8.70	2.82	8.92	8.44	2.83	8.65	8.19	2.90	8.37	7.93	2.98	8.07	7.65	3.18	7.70	7.30	3.45
	19°C	24°C	9.46	5.76	2.83	9.12	5.62	2.84	8.78	5.47	2.90	8.42	5.32	2.98	8.05	5.17	3.17	7.60	4.98	3.44
		27°C	9.50	7.03	2.83	9.15	6.87	2.84	8.81	6.72	2.90	8.45	6.56	2.99	8.08	6.40	3.18	7.62	6.19	3.45
		30°C	9.54	8.22	2.83	9.20	8.05	2.85	8.86	7.88	2.91	8.52	7.69	2.99	8.17	7.50	3.18	7.75	7.23	3.46
		33°C	9.73	9.16	2.84	9.44	8.93	2.86	9.15	8.67	2.93	8.86	8.40	3.01	8.56	8.11	3.22	8.18	7.76	3.50
	22°C	27°C	10.39	5.71	2.87	10.02	5.57	2.89	9.64	5.43	2.96	9.26	5.28	3.04	8.86	5.13	3.24	8.37	4.95	3.51
		30°C	10.42	7.00	2.87	10.04	6.85	2.89	9.67	6.69	2.96	9.28	6.54	3.04	8.88	6.38	3.24	8.39	6.19	3.51
		33°C	10.44	8.21	2.87	10.07	8.05	2.89	9.69	7.90	2.96	9.31	7.74	3.05	8.92	7.58	3.24	8.43	7.36	3.52
		36°C	10.51	9.34	2.88	10.15	9.15	2.90	9.80	8.97	2.97	9.45	8.76	3.06	9.09	8.52	3.26	8.67	8.20	3.54
830	16°C	21°C	8.76	6.00	2.80	8.43	5.84	2.81	8.11	5.68	2.87	7.78	5.52	2.94	7.43	5.35	3.13	6.99	5.14	3.39
		24°C	8.79	7.28	2.80	8.47	7.11	2.81	8.15	6.95	2.87	7.81	6.78	2.95	7.47	6.60	3.13	7.04	6.36	3.40
		27°C	8.90	8.41	2.81	8.60	8.20	2.82	8.31	7.97	2.88	8.02	7.73	2.96	7.72	7.45	3.15	7.36	7.10	3.42
		30°C	9.35	9.02	2.83	9.08	8.76	2.84	8.80	8.49	2.91	8.51	8.21	2.99	8.21	7.92	3.19	7.83	7.56	3.47
	19°C	24°C	9.63	5.98	2.84	9.29	5.82	2.85	8.93	5.67	2.91	8.57	5.51	2.99	8.20	5.35	3.19	7.73	5.15	3.46
		27°C	9.67	7.29	2.84	9.32	7.13	2.85	8.96	6.96	2.92	8.60	6.80	3.00	8.23	6.62	3.19	7.76	6.41	3.46
		30°C	9.71	8.53	2.84	9.36	8.35	2.86	9.02	8.17	2.92	8.67	7.97	3.00	8.32	7.76	3.20	7.88	7.48	3.47
		33°C	9.91	9.51	2.85	9.61	9.26	2.87	9.32	8.99	2.94	9.02	8.70	3.03	8.71	8.40	3.23	8.32	8.03	3.51
	22°C	27°C	10.58	5.92	2.88	10.20	5.77	2.90	9.82	5.62	2.97	9.42	5.47	3.05	9.02	5.31	3.25	8.51	5.12	3.52
		30°C	10.60	7.26	2.88	10.22	7.10	2.90	9.84	6.94	2.97	9.45	6.78	3.06	9.04	6.61	3.25	8.54	6.40	3.53
		33°C	10.63	8.51	2.88	10.25	8.35	2.90	9.87	8.19	2.97	9.47	8.02	3.06	9.08	7.84	3.26	8.58	7.62	3.53
		36°C	10.70	9.69	2.89	10.33	9.49	2.91	9.98	9.29	2.98	9.61	9.07	3.07	9.26	8.82	3.27	8.82	8.48	3.55
900	16°C	21°C	8.86	6.15	2.81	8.53	5.98	2.82	8.21	5.82	2.87	7.87	5.65	2.95	7.52	5.48	3.14	7.08	5.26	3.40
		24°C	8.90	7.46	2.81	8.57	7.29	2.82	8.24	7.12	2.88	7.90	6.94	2.95	7.56	6.75	3.14	7.13	6.51	3.40
		27°C	9.00	8.62	2.81	8.71	8.40	2.82	8.41	8.17	2.88	8.11	7.91	2.97	7.81	7.63	3.16	7.44	7.26	3.43
		30°C	9.46	9.24	2.83	9.19	8.97	2.85	8.90	8.70	2.91	8.61	8.41	3.00	8.31	8.11	3.20	7.93	7.73	3.47
	19°C	24°C	9.75	6.12	2.85	9.40	5.97	2.86	9.04	5.81	2.92	8.67	5.64	3.00	8.29	5.47	3.19	7.82	5.27	3.46
		27°C	9.78	7.47	2.85	9.43	7.30	2.86	9.07	7.13	2.92	8.70	6.96	3.00	8.32	6.78	3.20	7.85	6.56	3.47
		30°C	9.82	8.74	2.85	9.47	8.55	2.86	9.13	8.36	2.93	8.78	8.16	3.01	8.42	7.94	3.20	7.98	7.65	3.48
		33°C	10.02	9.74	2.86	9.72	9.48	2.88	9.43	9.20	2.94	9.13	8.91	3.03	8.81	8.60	3.23	8.42	8.21	3.52
	22°C	27°C	10.70	6.06	2.89	10.32	5.91	2.91	9.93	5.76	2.97	9.53	5.60	3.06	9.12	5.44	3.26	8.61	5.24	3.53
		30°C	10.73	7.44	2.89	10.34	7.27	2.91	9.95	7.11	2.98	9.56	6.94	3.06	9.15	6.76	3.26	8.64	6.55	3.53
		33°C	10.76	8.72	2.89	10.37	8.55	2.91	9.98	8.39	2.98	9.59	8.21	3.06	9.18	8.03	3.26	8.68	7.79	3.54
		36°C	10.83	9.93	2.89	10.46	9.73	2.91	10.09	9.52	2.98	9.73	9.29	3.07	9.36	9.03	3.28	8.93	8.68	3.56

Remark:
AFR: Air flow rate (CFM)
EWB: Entering Wet Bulb Temp. (˚C)
EDB: Entering Dry Bulb Temp. (˚C)
TC: Total Cooling Capacity (kW)
SHC: Sensible Heat Capacity (kW)
PI: Power Input

Notes:
1. Ratings shown are gross capacities which do not include a deduction for indoor fan motor heat.
2. shows nominal capacities.
3. Direct interpolation is permissible. Do not extrapolate.

Heating Mode

ID DB°C	Outdoor WB°C													
	-9		-6		-5		6		12		15		18	
	TC(kW)	SC(kW)	TC(kW)	SC(kW)	TC(kW)	SC(kW)	TC(kW)	SC(kW)	TC(kW)	SC(kW)	TC(kW)	SC(kW)	TC(kW)	SC(kW)
15	3.859	3.859	4.849	4.849	5.179	5.179	8.810	8.810	10.791	10.791	11.781	11.781	12.772	12.772
17	3.757	3.757	4.749	4.749	5.080	5.080	8.572	8.572	10.497	10.497	11.453	11.453	12.408	12.408
19	3.656	3.656	4.650	4.650	4.981	4.981	8.333	8.333	10.202	10.202	11.124	11.124	12.045	12.045
21	3.554	3.554	4.550	4.550	4.882	4.882	8.095	8.095	9.908	9.908	10.795	10.795	11.682	11.682
23	3.552	3.552	4.475	4.475	4.782	4.782	7.883	7.883	9.614	9.614	10.466	10.466	11.319	11.319
25	3.549	3.549	4.400	4.400	4.683	4.683	7.671	7.671	9.319	9.319	10.137	10.137	10.955	10.955
27	3.547	3.547	4.325	4.325	4.584	4.584	7.459	7.459	9.025	9.025	9.808	9.808	10.592	10.592
	FROST REGION													

Model: ACC30CR - ALC~~30CR~~ 30DR
Cooling Mode

AFR (CFM)	EWB	EDB	Outdoor temperature																	
			19°C			25°C			30°C			35°C			40°C			46°C		
			TC	SHC	PI	TC	SHC	PI	TC	SHC	PI	TC	SHC	PI	TC	SHC	PI	TC	SHC	PI
710	16°C	21°C	8.28	5.42	2.59	7.98	5.28	2.60	7.67	5.14	2.65	7.36	5.00	2.72	7.03	4.85	2.90	6.62	4.67	3.14
		24°C	8.31	6.58	2.60	8.01	6.43	2.60	7.71	6.29	2.66	7.39	6.14	2.73	7.07	5.98	2.90	6.66	5.78	3.15
		27°C	8.41	7.60	2.60	8.14	7.41	2.61	7.87	7.21	2.66	7.59	7.00	2.74	7.31	6.76	2.92	6.96	6.45	3.17
		30°C	8.84	8.15	2.62	8.59	7.92	2.63	8.33	7.68	2.69	8.06	7.44	2.77	7.77	7.18	2.95	7.41	6.86	3.21
	19°C	24°C	9.11	5.40	2.63	8.78	5.26	2.64	8.45	5.13	2.70	8.11	4.99	2.77	7.76	4.85	2.95	7.31	4.68	3.20
		27°C	9.14	6.59	2.63	8.81	6.44	2.64	8.48	6.30	2.70	8.14	6.15	2.77	7.78	6.00	2.95	7.34	5.82	3.20
		30°C	9.18	7.70	2.63	8.85	7.55	2.64	8.53	7.39	2.70	8.21	7.22	2.78	7.87	7.04	2.96	7.46	6.79	3.21
		33°C	9.36	8.59	2.64	9.09	8.37	2.66	8.81	8.13	2.72	8.53	7.88	2.80	8.24	7.62	2.99	7.87	7.29	3.25
	22°C	27°C	10.00	5.35	2.67	9.64	5.22	2.68	9.29	5.09	2.75	8.92	4.95	2.83	8.53	4.82	3.01	8.06	4.65	3.26
		30°C	10.02	6.56	2.67	9.67	6.42	2.69	9.31	6.28	2.75	8.94	6.14	2.83	8.55	5.99	3.01	8.08	5.81	3.27
		33°C	10.05	7.69	2.67	9.69	7.55	2.69	9.33	7.41	2.75	8.96	7.26	2.83	8.59	7.11	3.01	8.12	6.92	3.27
		36°C	10.12	8.75	2.67	9.77	8.58	2.69	9.44	8.41	2.76	9.10	8.22	2.84	8.76	8.00	3.03	8.35	7.71	3.29
760	16°C	21°C	8.49	5.71	2.61	8.18	5.56	2.61	7.87	5.41	2.67	7.54	5.26	2.74	7.21	5.10	2.91	6.79	4.90	3.16
		24°C	8.53	6.93	2.61	8.21	6.77	2.62	7.90	6.62	2.67	7.58	6.46	2.74	7.25	6.29	2.92	6.83	6.07	3.16
		27°C	8.63	8.01	2.61	8.35	7.81	2.62	8.06	7.60	2.68	7.78	7.36	2.75	7.49	7.10	2.93	7.14	6.77	3.19
		30°C	9.07	8.59	2.63	8.81	8.34	2.64	8.54	8.09	2.70	8.26	7.82	2.78	7.97	7.55	2.97	7.60	7.21	3.22
	19°C	24°C	9.34	5.69	2.64	9.01	5.54	2.65	8.67	5.40	2.71	8.32	5.25	2.79	7.95	5.10	2.96	7.50	4.91	3.22
		27°C	9.38	6.94	2.64	9.04	6.78	2.66	8.70	6.63	2.71	8.35	6.48	2.79	7.98	6.31	2.97	7.53	6.12	3.22
		30°C	9.42	8.11	2.64	9.08	7.95	2.66	8.75	7.78	2.72	8.42	7.59	2.79	8.07	7.40	2.97	7.65	7.14	3.23
		33°C	9.61	9.05	2.65	9.32	8.81	2.67	9.04	8.56	2.73	8.75	8.29	2.82	8.45	8.01	3.00	8.07	7.66	3.27
	22°C	27°C	10.26	5.63	2.68	9.89	5.50	2.70	9.52	5.36	2.76	9.14	5.21	2.84	8.75	5.07	3.02	8.26	4.88	3.28
		30°C	10.28	6.91	2.68	9.92	6.76	2.70	9.54	6.61	2.76	9.16	6.46	2.84	8.77	6.30	3.03	8.28	6.11	3.28
		33°C	10.31	8.10	2.68	9.94	7.95	2.70	9.57	7.80	2.76	9.19	7.64	2.85	8.80	7.48	3.03	8.32	7.27	3.29
		36°C	10.38	9.22	2.69	10.02	9.04	2.71	9.68	8.85	2.77	9.33	8.65	2.85	8.98	8.41	3.04	8.56	8.09	3.31
830	16°C	21°C	8.65	5.92	2.62	8.33	5.77	2.62	8.01	5.61	2.68	7.68	5.45	2.75	7.34	5.29	2.92	6.91	5.07	3.17
		24°C	8.68	7.19	2.62	8.36	7.02	2.63	8.04	6.86	2.68	7.71	6.69	2.75	7.37	6.51	2.93	6.95	6.28	3.17
		27°C	8.78	8.31	2.62	8.49	8.10	2.63	8.21	7.87	2.69	7.92	7.63	2.76	7.63	7.36	2.94	7.26	7.01	3.20
		30°C	9.24	8.91	2.64	8.96	8.65	2.65	8.69	8.38	2.71	8.41	8.11	2.79	8.11	7.82	2.98	7.73	7.46	3.24
	19°C	24°C	9.51	5.90	2.65	9.17	5.75	2.66	8.82	5.60	2.72	8.46	5.44	2.80	8.09	5.28	2.98	7.63	5.08	3.23
		27°C	9.54	7.20	2.65	9.20	7.04	2.67	8.85	6.87	2.72	8.49	6.71	2.80	8.12	6.54	2.98	7.66	6.33	3.23
		30°C	9.59	8.42	2.65	9.24	8.24	2.67	8.91	8.06	2.73	8.56	7.87	2.80	8.21	7.66	2.98	7.78	7.39	3.24
		33°C	9.78	9.39	2.66	9.49	9.14	2.68	9.20	8.87	2.74	8.90	8.59	2.83	8.60	8.29	3.01	8.21	7.92	3.28
	22°C	27°C	10.44	5.84	2.69	10.07	5.70	2.71	9.69	5.55	2.77	9.30	5.40	2.85	8.90	5.25	3.04	8.41	5.05	3.29
		30°C	10.47	7.17	2.69	10.09	7.01	2.71	9.71	6.85	2.77	9.33	6.69	2.85	8.93	6.52	3.04	8.43	6.32	3.29
		33°C	10.50	8.41	2.69	10.12	8.24	2.71	9.74	8.08	2.77	9.35	7.92	2.86	8.96	7.75	3.04	8.47	7.52	3.30
		36°C	10.57	9.57	2.70	10.20	9.37	2.72	9.85	9.18	2.78	9.49	8.96	2.86	9.14	8.71	3.05	8.71	8.38	3.32
900	16°C	21°C	8.75	6.07	2.62	8.43	5.91	2.63	8.10	5.75	2.68	7.77	5.58	2.75	7.42	5.41	2.93	6.99	5.19	3.18
		24°C	8.78	7.37	2.62	8.46	7.20	2.63	8.14	7.03	2.69	7.80	6.85	2.76	7.46	6.67	2.93	7.04	6.42	3.18
		27°C	8.89	8.51	2.63	8.59	8.29	2.64	8.30	8.06	2.69	8.01	7.81	2.77	7.71	7.53	2.95	7.35	7.17	3.20
		30°C	9.34	9.13	2.65	9.07	8.86	2.66	8.79	8.59	2.72	8.50	8.30	2.80	8.20	8.00	2.98	7.83	7.63	3.24
	19°C	24°C	9.62	6.05	2.66	9.28	5.89	2.67	8.92	5.73	2.73	8.56	5.57	2.80	8.19	5.40	2.98	7.72	5.20	3.23
		27°C	9.66	7.38	2.66	9.31	7.21	2.67	8.95	7.04	2.73	8.59	6.87	2.81	8.22	6.69	2.98	7.75	6.47	3.24
		30°C	9.70	8.63	2.66	9.35	8.44	2.67	9.01	8.26	2.73	8.67	8.06	2.81	8.31	7.84	2.99	7.88	7.55	3.25
		33°C	9.90	9.62	2.67	9.60	9.36	2.69	9.31	9.09	2.75	9.01	8.79	2.83	8.70	8.49	3.02	8.31	8.10	3.28
	22°C	27°C	10.56	5.99	2.70	10.19	5.84	2.71	9.80	5.69	2.78	9.41	5.53	2.86	9.01	5.37	3.04	8.50	5.17	3.30
		30°C	10.59	7.34	2.70	10.21	7.18	2.72	9.83	7.02	2.78	9.44	6.85	2.86	9.03	6.68	3.04	8.53	6.46	3.30
		33°C	10.62	8.61	2.70	10.24	8.45	2.72	9.86	8.28	2.78	9.46	8.11	2.86	9.07	7.93	3.05	8.57	7.69	3.30
		36°C	10.69	9.80	2.70	10.32	9.60	2.72	9.96	9.40	2.79	9.61	9.17	2.87	9.24	8.92	3.06	8.81	8.57	3.33

Remark:
AFR: Air flow rate (CFM)
EWB: Entering Wet Bulb Temp. (˚C)
EDB: Entering Dry Bulb Temp. (˚C)

TC: Total Cooling Capacity (kW)
SHC: Sensible Heat Capacity (kW)
PI: Power Input

Notes:
1. Ratings shown are gross capacities which do not include a deduction for indoor fan motor heat.
2. shows nominal capacities.
3. Direct interpolation is permissible. Do not extrapolate.

Heating Mode

ID DB°C	Outdoor WB°C													
	-9		-6		-5		6		12		15		18	
	TC(kW)	SC(kW)	TC(kW)	SC(kW)	TC(kW)	SC(kW)	TC(kW)	SC(kW)	TC(kW)	SC(kW)	TC(kW)	SC(kW)	TC(kW)	SC(kW)
15	5.582	5.582	6.437	6.437	6.722	6.722	9.858	9.858	11.569	11.569	12.424	12.424	13.279	13.279
17	5.577	5.577	6.349	6.349	6.606	6.606	9.503	9.503	11.259	11.259	12.081	12.081	12.902	12.902
19	5.573	5.573	6.261	6.261	6.491	6.491	9.148	9.148	10.950	10.950	11.737	11.737	12.524	12.524
21	5.569	5.569	6.173	6.173	6.375	6.375	8.792	8.792	10.641	10.641	11.394	11.394	12.147	12.147
23	5.429	5.429	6.051	6.051	6.259	6.259	8.672	8.672	10.332	10.332	11.051	11.051	11.770	11.770
25	5.289	5.289	5.930	5.930	6.143	6.143	8.551	8.551	10.023	10.023	10.708	10.708	11.392	11.392
27	5.149	5.149	5.808	5.808	6.027	6.027	8.431	8.431	9.714	9.714	10.364	10.364	11.015	11.015
	FROST REGION													

Model: ACC30CR - ALC~~30CR~~ (3 Phase)

Cooling Mode 30DR

AFR (CFM)	EWB	EDB	Outdoor temperature																	
			19°C			25°C			30°C			35°C			40°C			46°C		
			TC	SHC	PI	TC	SHC	PI	TC	SHC	PI	TC	SHC	PI	TC	SHC	PI	TC	SHC	PI
710	16°C	21°C	8.28	5.42	2.65	7.98	5.28	2.65	7.67	5.14	2.71	7.36	5.00	2.78	7.03	4.85	2.96	6.62	4.67	3.21
		24°C	8.31	6.58	2.65	8.01	6.43	2.66	7.71	6.29	2.71	7.39	6.14	2.78	7.07	5.98	2.96	6.66	5.78	3.21
		27°C	8.41	7.60	2.65	8.14	7.41	2.66	7.87	7.21	2.72	7.59	7.00	2.79	7.31	6.76	2.98	6.96	6.45	3.23
		30°C	8.84	8.15	2.67	8.59	7.92	2.68	8.33	7.68	2.74	8.06	7.44	2.82	7.77	7.18	3.01	7.41	6.86	3.27
	19°C	24°C	9.11	5.40	2.68	8.78	5.26	2.69	8.45	5.13	2.75	8.11	4.99	2.83	7.76	4.85	3.01	7.31	4.68	3.26
		27°C	9.14	6.59	2.68	8.81	6.44	2.69	8.48	6.30	2.75	8.14	6.15	2.83	7.78	6.00	3.01	7.34	5.82	3.27
		30°C	9.18	7.70	2.68	8.85	7.55	2.70	8.53	7.39	2.76	8.21	7.22	2.83	7.87	7.04	3.02	7.46	6.79	3.28
		33°C	9.36	8.59	2.69	9.09	8.37	2.71	8.81	8.13	2.77	8.53	7.88	2.86	8.24	7.62	3.05	7.87	7.29	3.31
	22°C	27°C	10.00	5.35	2.72	9.64	5.22	2.74	9.29	5.09	2.80	8.92	4.95	2.88	8.53	4.82	3.07	8.06	4.65	3.33
		30°C	10.02	6.56	2.72	9.67	6.42	2.74	9.31	6.28	2.80	8.94	6.14	2.88	8.55	5.99	3.07	8.08	5.81	3.33
		33°C	10.05	7.69	2.72	9.69	7.55	2.74	9.33	7.41	2.80	8.96	7.26	2.89	8.59	7.11	3.07	8.12	6.92	3.33
		36°C	10.12	8.75	2.73	9.77	8.58	2.75	9.44	8.41	2.81	9.10	8.22	2.90	8.76	8.00	3.09	8.35	7.71	3.36
760	16°C	21°C	8.49	5.71	2.66	8.18	5.56	2.67	7.87	5.41	2.72	7.54	5.26	2.79	7.21	5.10	2.97	6.79	4.90	3.22
		24°C	8.53	6.93	2.66	8.21	6.77	2.67	7.90	6.62	2.72	7.58	6.46	2.80	7.25	6.29	2.97	6.83	6.07	3.23
		27°C	8.63	8.01	2.67	8.35	7.81	2.67	8.06	7.60	2.73	7.78	7.36	2.81	7.49	7.10	2.99	7.14	6.77	3.25
		30°C	9.07	8.59	2.68	8.81	8.34	2.70	8.54	8.09	2.76	8.26	7.82	2.84	7.97	7.55	3.03	7.60	7.21	3.29
	19°C	24°C	9.34	5.69	2.69	9.01	5.54	2.71	8.67	5.40	2.76	8.32	5.25	2.84	7.95	5.10	3.02	7.50	4.91	3.28
		27°C	9.38	6.94	2.70	9.04	6.78	2.71	8.70	6.63	2.77	8.35	6.48	2.84	7.98	6.31	3.03	7.53	6.12	3.28
		30°C	9.42	8.11	2.70	9.08	7.95	2.71	8.75	7.78	2.77	8.42	7.59	2.85	8.07	7.40	3.03	7.65	7.14	3.29
		33°C	9.61	9.05	2.71	9.32	8.81	2.72	9.04	8.56	2.79	8.75	8.29	2.87	8.45	8.01	3.06	8.07	7.66	3.33
	22°C	27°C	10.26	5.63	2.73	9.89	5.50	2.75	9.52	5.36	2.82	9.14	5.21	2.90	8.75	5.07	3.08	8.26	4.88	3.35
		30°C	10.28	6.91	2.74	9.92	6.76	2.75	9.54	6.61	2.82	9.16	6.46	2.90	8.77	6.30	3.09	8.28	6.11	3.35
		33°C	10.31	8.10	2.74	9.94	7.95	2.76	9.57	7.80	2.82	9.19	7.64	2.90	8.80	7.48	3.09	8.32	7.27	3.35
		36°C	10.38	9.22	2.74	10.02	9.04	2.76	9.68	8.85	2.83	9.33	8.65	2.91	8.98	8.41	3.10	8.56	8.09	3.37
830	16°C	21°C	8.65	5.92	2.67	8.33	5.77	2.68	8.01	5.61	2.73	7.68	5.45	2.80	7.34	5.29	2.98	6.91	5.07	3.23
		24°C	8.68	7.19	2.67	8.36	7.02	2.68	8.04	6.86	2.73	7.71	6.69	2.81	7.37	6.51	2.98	6.95	6.28	3.24
		27°C	8.78	8.31	2.68	8.49	8.10	2.68	8.21	7.87	2.74	7.92	7.63	2.82	7.63	7.36	3.00	7.26	7.01	3.26
		30°C	9.24	8.91	2.69	8.96	8.65	2.71	8.69	8.38	2.77	8.41	8.11	2.85	8.11	7.82	3.04	7.73	7.46	3.30
	19°C	24°C	9.51	5.90	2.70	9.17	5.75	2.72	8.82	5.60	2.78	8.46	5.44	2.85	8.09	5.28	3.04	7.63	5.08	3.29
		27°C	9.54	7.20	2.71	9.20	7.04	2.72	8.85	6.87	2.78	8.49	6.71	2.86	8.12	6.54	3.04	7.66	6.33	3.29
		30°C	9.59	8.42	2.71	9.24	8.24	2.72	8.91	8.06	2.78	8.56	7.87	2.86	8.21	7.66	3.04	7.78	7.39	3.30
		33°C	9.78	9.39	2.72	9.49	9.14	2.73	9.20	8.87	2.80	8.90	8.59	2.88	8.60	8.29	3.07	8.21	7.92	3.34
	22°C	27°C	10.44	5.84	2.74	10.07	5.70	2.76	9.69	5.55	2.83	9.30	5.40	2.91	8.90	5.25	3.10	8.41	5.05	3.36
		30°C	10.47	7.17	2.75	10.09	7.01	2.76	9.71	6.85	2.83	9.33	6.69	2.91	8.93	6.52	3.10	8.43	6.32	3.36
		33°C	10.50	8.41	2.75	10.12	8.24	2.77	9.74	8.08	2.83	9.35	7.92	2.91	8.96	7.75	3.10	8.47	7.52	3.36
		36°C	10.57	9.57	2.75	10.20	9.37	2.77	9.85	9.18	2.84	9.49	8.96	2.92	9.14	8.71	3.11	8.71	8.38	3.39
900	16°C	21°C	8.75	6.07	2.68	8.43	5.91	2.68	8.10	5.75	2.74	7.77	5.58	2.81	7.42	5.41	2.99	6.99	5.19	3.24
		24°C	8.78	7.37	2.68	8.46	7.20	2.69	8.14	7.03	2.74	7.80	6.85	2.81	7.46	6.67	2.99	7.04	6.42	3.24
		27°C	8.89	8.51	2.68	8.59	8.29	2.69	8.30	8.06	2.75	8.01	7.81	2.82	7.71	7.53	3.01	7.35	7.17	3.27
		30°C	9.34	9.13	2.70	9.07	8.86	2.71	8.79	8.59	2.77	8.50	8.30	2.86	8.20	8.00	3.04	7.83	7.63	3.31
	19°C	24°C	9.62	6.05	2.71	9.28	5.89	2.72	8.92	5.73	2.78	8.56	5.57	2.86	8.19	5.40	3.04	7.72	5.20	3.30
		27°C	9.66	7.38	2.71	9.31	7.21	2.72	8.95	7.04	2.78	8.59	6.87	2.86	8.22	6.69	3.04	7.75	6.47	3.30
		30°C	9.70	8.63	2.71	9.35	8.44	2.73	9.01	8.26	2.79	8.67	8.06	2.87	8.31	7.84	3.05	7.88	7.55	3.31
		33°C	9.90	9.62	2.72	9.60	9.36	2.74	9.31	9.09	2.80	9.01	8.79	2.89	8.70	8.49	3.08	8.31	8.10	3.35
	22°C	27°C	10.56	5.99	2.75	10.19	5.84	2.77	9.80	5.69	2.83	9.41	5.53	2.92	9.01	5.37	3.10	8.50	5.17	3.36
		30°C	10.59	7.34	2.75	10.21	7.18	2.77	9.83	7.02	2.83	9.44	6.85	2.92	9.03	6.68	3.10	8.53	6.46	3.37
		33°C	10.62	8.61	2.75	10.24	8.45	2.77	9.86	8.28	2.84	9.46	8.11	2.92	9.07	7.93	3.11	8.57	7.69	3.37
		36°C	10.69	9.80	2.76	10.32	9.60	2.78	9.96	9.40	2.84	9.61	9.17	2.93	9.24	8.92	3.12	8.81	8.57	3.39

Remark:
AFR: Air flow rate (CFM)
EWB: Entering Wet Bulb Temp. (˚C)
EDB: Entering Dry Bulb Temp. (˚C)

TC: Total Cooling Capacity (kW)
SHC: Sensible Heat Capacity (kW)
PI: Power Input

Notes:
1. Ratings shown are gross capacities which do not include a deduction for indoor fan motor heat.
2. shows nominal capacities.
3. Direct interpolation is permissible. Do not extrapolate.

Heating Mode

ID DB°C	Outdoor WB°C													
	-9		-6		-5		6		12		15		18	
	TC(kW)	SC(kW)	TC(kW)	SC(kW)	TC(kW)	SC(kW)	TC(kW)	SC(kW)	TC(kW)	SC(kW)	TC(kW)	SC(kW)	TC(kW)	SC(kW)
15	5.582	5.582	6.437	6.437	6.722	6.722	9.858	9.858	11.569	11.569	12.424	12.424	13.279	13.279
17	5.577	5.577	6.349	6.349	6.606	6.606	9.503	9.503	11.259	11.259	12.081	12.081	12.902	12.902
19	5.573	5.573	6.261	6.261	6.491	6.491	9.148	9.148	10.950	10.950	11.737	11.737	12.524	12.524
21	5.569	5.569	6.173	6.173	6.375	6.375	8.792	8.792	10.641	10.641	11.394	11.394	12.147	12.147
23	5.429	5.429	6.051	6.051	6.259	6.259	8.672	8.672	10.332	10.332	11.051	11.051	11.770	11.770
25	5.289	5.289	5.930	5.930	6.143	6.143	8.551	8.551	10.023	10.023	10.708	10.708	11.392	11.392
27	5.149	5.149	5.808	5.808	6.027	6.027	8.431	8.431	9.714	9.714	10.364	10.364	11.015	11.015
	FROST REGION													

Model: ACC38CR - ALC~~35CR~~ 35DR

Cooling Mode

AFR (CFM)	EWB	EDB	Outdoor temperature																	
			19°C			25°C			30°C			35°C			40°C			46°C		
			TC	SHC	PI	TC	SHC	PI	TC	SHC	PI	TC	SHC	PI	TC	SHC	PI	TC	SHC	PI
1350	16°C	21°C	10.00	6.54	3.19	9.63	6.38	3.20	9.27	6.21	3.26	8.89	6.04	3.35	8.49	5.86	3.56	7.99	5.64	3.87
		24°C	10.04	7.94	3.19	9.67	7.77	3.20	9.31	7.59	3.27	8.93	7.41	3.35	8.54	7.22	3.57	8.05	6.98	3.87
		27°C	10.16	9.18	3.20	9.83	8.95	3.21	9.50	8.71	3.28	9.16	8.45	3.37	8.83	8.16	3.59	8.41	7.78	3.90
		30°C	10.68	9.84	3.22	10.37	9.56	3.24	10.06	9.28	3.31	9.73	8.98	3.41	9.38	8.67	3.63	8.95	8.29	3.95
	19°C	24°C	11.00	6.52	3.23	10.61	6.36	3.25	10.21	6.20	3.32	9.80	6.03	3.41	9.37	5.86	3.63	8.83	5.65	3.94
		27°C	11.04	7.95	3.24	10.64	7.78	3.25	10.24	7.61	3.32	9.83	7.43	3.41	9.40	7.25	3.63	8.87	7.03	3.94
		30°C	11.09	9.30	3.24	10.69	9.11	3.25	10.31	8.92	3.32	9.91	8.72	3.42	9.51	8.50	3.64	9.01	8.20	3.95
		33°C	11.31	10.37	3.25	10.97	10.11	3.27	10.64	9.82	3.34	10.31	9.51	3.45	9.95	9.20	3.67	9.51	8.80	4.00
	22°C	27°C	12.07	6.46	3.28	11.65	6.30	3.30	11.21	6.15	3.38	10.77	5.98	3.48	10.31	5.82	3.70	9.73	5.61	4.01
		30°C	12.10	7.92	3.28	11.67	7.75	3.30	11.24	7.58	3.38	10.80	7.41	3.48	10.33	7.24	3.70	9.76	7.02	4.02
		33°C	12.14	9.29	3.28	11.71	9.12	3.31	11.27	8.95	3.38	10.83	8.77	3.48	10.37	8.59	3.71	9.81	8.35	4.02
		36°C	12.22	10.57	3.29	11.80	10.36	3.31	11.40	10.16	3.39	10.99	9.93	3.49	10.58	9.66	3.72	10.08	9.31	4.05
1420	16°C	21°C	10.26	6.89	3.21	9.88	6.72	3.22	9.50	6.54	3.28	9.11	6.35	3.37	8.70	6.16	3.58	8.20	5.92	3.89
		24°C	10.30	8.37	3.21	9.92	8.18	3.22	9.54	8.00	3.28	9.15	7.80	3.37	8.75	7.60	3.59	8.25	7.33	3.89
		27°C	10.42	9.67	3.21	10.08	9.43	3.23	9.74	9.17	3.29	9.39	8.89	3.39	9.05	8.58	3.61	8.62	8.18	3.92
		30°C	10.96	10.37	3.24	10.64	10.07	3.25	10.31	9.77	3.33	9.97	9.45	3.42	9.62	9.12	3.65	9.18	8.71	3.97
	19°C	24°C	11.29	6.87	3.25	10.88	6.70	3.26	10.47	6.52	3.33	10.04	6.34	3.43	9.60	6.16	3.65	9.06	5.93	3.96
		27°C	11.32	8.38	3.25	10.91	8.19	3.27	10.50	8.01	3.34	10.08	7.82	3.43	9.64	7.63	3.65	9.09	7.39	3.96
		30°C	11.37	9.80	3.25	10.97	9.60	3.27	10.57	9.40	3.34	10.16	9.17	3.44	9.75	8.94	3.66	9.24	8.62	3.97
		33°C	11.60	10.93	3.26	11.26	10.64	3.28	10.92	10.34	3.36	10.57	10.01	3.46	10.20	9.67	3.69	9.75	9.25	4.02
	22°C	27°C	12.39	6.80	3.30	11.95	6.64	3.32	11.50	6.47	3.40	11.04	6.30	3.49	10.56	6.12	3.72	9.98	5.90	4.03
		30°C	12.42	8.34	3.30	11.98	8.16	3.32	11.53	7.98	3.40	11.07	7.80	3.50	10.59	7.61	3.72	10.00	7.38	4.04
		33°C	12.45	9.79	3.30	12.01	9.60	3.32	11.56	9.42	3.40	11.10	9.23	3.50	10.63	9.03	3.73	10.05	8.78	4.04
		36°C	12.54	11.14	3.30	12.11	10.92	3.33	11.69	10.69	3.41	11.26	10.44	3.51	10.84	10.16	3.74	10.34	9.78	4.07
1470	16°C	21°C	10.44	7.15	3.22	10.06	6.97	3.23	9.67	6.78	3.29	9.27	6.58	3.38	8.86	6.38	3.60	8.34	6.13	3.90
		24°C	10.49	8.68	3.22	10.10	8.48	3.23	9.71	8.29	3.30	9.32	8.08	3.38	8.91	7.87	3.60	8.40	7.59	3.90
		27°C	10.61	10.03	3.23	10.26	9.78	3.24	9.91	9.51	3.31	9.56	9.21	3.40	9.21	8.89	3.62	8.77	8.46	3.93
		30°C	11.15	10.76	3.25	10.83	10.44	3.27	10.50	10.12	3.34	10.15	9.79	3.44	9.79	9.45	3.66	9.34	9.01	3.98
	19°C	24°C	11.49	7.13	3.26	11.07	6.94	3.28	10.65	6.76	3.35	10.22	6.57	3.44	9.77	6.38	3.66	9.22	6.14	3.97
		27°C	11.53	8.69	3.26	11.11	8.50	3.28	10.69	8.30	3.35	10.26	8.10	3.44	9.81	7.90	3.66	9.25	7.64	3.97
		30°C	11.58	10.17	3.27	11.16	9.95	3.28	10.76	9.74	3.35	10.34	9.50	3.45	9.92	9.25	3.67	9.40	8.92	3.99
		33°C	11.81	11.33	3.28	11.46	11.04	3.30	11.11	10.72	3.37	10.75	10.37	3.48	10.38	10.02	3.71	9.92	9.57	4.03
	22°C	27°C	12.61	7.06	3.31	12.16	6.88	3.33	11.70	6.71	3.41	11.24	6.52	3.51	10.75	6.34	3.73	10.15	6.10	4.05
		30°C	12.64	8.66	3.31	12.19	8.46	3.33	11.73	8.27	3.41	11.26	8.08	3.51	10.78	7.88	3.74	10.18	7.63	4.05
		33°C	12.68	10.15	3.31	12.22	9.96	3.34	11.77	9.76	3.41	11.30	9.56	3.51	10.82	9.35	3.74	10.23	9.08	4.06
		36°C	12.76	11.55	3.32	12.32	11.32	3.34	11.90	11.08	3.42	11.46	10.82	3.52	11.04	10.52	3.76	10.52	10.12	4.08
1540	16°C	21°C	10.56	7.33	3.23	10.18	7.14	3.24	9.79	6.94	3.30	9.38	6.74	3.39	8.96	6.53	3.60	8.44	6.27	3.91
		24°C	10.61	8.90	3.23	10.22	8.69	3.24	9.83	8.49	3.30	9.43	8.27	3.39	9.01	8.05	3.61	8.50	7.76	3.91
		27°C	10.73	10.28	3.23	10.38	10.02	3.25	10.03	9.74	3.31	9.67	9.43	3.41	9.32	9.09	3.63	8.88	8.66	3.94
		30°C	11.28	11.02	3.25	10.95	10.70	3.27	10.62	10.37	3.35	10.27	10.02	3.44	9.91	9.67	3.67	9.45	9.22	3.99
	19°C	24°C	11.62	7.30	3.27	11.20	7.11	3.28	10.78	6.92	3.35	10.34	6.73	3.45	9.89	6.53	3.67	9.33	6.28	3.98
		27°C	11.66	8.91	3.27	11.24	8.70	3.29	10.81	8.50	3.36	10.38	8.29	3.45	9.92	8.08	3.67	9.36	7.82	3.98
		30°C	11.71	10.42	3.27	11.29	10.20	3.29	10.88	9.97	3.36	10.47	9.73	3.46	10.03	9.47	3.68	9.51	9.12	3.99
		33°C	11.95	11.61	3.28	11.59	11.31	3.30	11.24	10.97	3.38	10.88	10.62	3.48	10.51	10.25	3.71	10.04	9.79	4.04
	22°C	27°C	12.76	7.23	3.32	12.30	7.05	3.34	11.84	6.87	3.42	11.37	6.68	3.52	10.88	6.48	3.74	10.27	6.24	4.06
		30°C	12.79	8.87	3.32	12.33	8.67	3.34	11.87	8.47	3.42	11.40	8.27	3.52	10.91	8.06	3.74	10.30	7.81	4.06
		33°C	12.83	10.40	3.32	12.37	10.20	3.34	11.90	10.00	3.42	11.43	9.79	3.52	10.95	9.57	3.75	10.35	9.29	4.06
		36°C	12.91	11.84	3.32	12.47	11.60	3.35	12.03	11.35	3.43	11.60	11.08	3.53	11.16	10.77	3.76	10.64	10.35	4.09

Remark:
AFR: Air flow rate (CFM)
EWB: Entering Wet Bulb Temp. (˚C)
EDB: Entering Dry Bulb Temp. (˚C)
TC: Total Cooling Capacity (kW)
SHC: Sensible Heat Capacity (kW)
PI: Power Input

Notes:
1. Ratings shown are gross capacities which do not include a deduction for indoor fan motor heat.
2. shows nominal capacities.
3. Direct interpolation is permissible. Do not extrapolate.

Heating Mode

ID DB°C	Outdoor WB°C													
	-9		-6		-5		6		12		15		18	
	TC(kW)	SC(kW)	TC(kW)	SC(kW)	TC(kW)	SC(kW)	TC(kW)	SC(kW)	TC(kW)	SC(kW)	TC(kW)	SC(kW)	TC(kW)	SC(kW)
15	4.741	4.741	5.949	5.949	6.352	6.352	10.782	10.782	13.198	13.198	14.406	14.406	15.614	15.614
17	4.618	4.618	5.827	5.827	6.230	6.230	10.537	10.537	12.838	12.838	14.004	14.004	15.170	15.170
19	4.496	4.496	5.706	5.706	6.109	6.109	10.293	10.293	12.478	12.478	13.602	13.602	14.726	14.726
21	4.373	4.373	5.584	5.584	5.987	5.987	10.049	10.049	12.118	12.118	13.200	13.200	14.282	14.282
23	4.368	4.368	5.491	5.491	5.866	5.866	9.740	9.740	11.758	11.758	12.798	12.798	13.838	13.838
25	4.363	4.363	5.399	5.399	5.744	5.744	9.431	9.431	11.398	11.398	12.396	12.396	13.394	13.394
27	4.358	4.358	5.306	5.306	5.623	5.623	9.122	9.122	11.038	11.038	11.994	11.994	12.949	12.949
	FROST REGION													

Model: ACC38CR - ALC~~40CR~~ 40DR

Cooling Mode

AFR (CFM)	EWB	EDB	Outdoor temperature																	
			19°C			25°C			30°C			35°C			40°C			46°C		
			TC	SHC	PI	TC	SHC	PI	TC	SHC	PI	TC	SHC	PI	TC	SHC	PI	TC	SHC	PI
1350	16°C	21°C	10.85	7.11	3.44	10.46	6.92	3.44	10.06	6.74	3.51	9.65	6.56	3.61	9.22	6.36	3.84	8.68	6.12	4.16
		24°C	10.90	8.63	3.44	10.50	8.43	3.45	10.10	8.25	3.52	9.69	8.05	3.61	9.27	7.84	3.84	8.74	7.58	4.17
		27°C	11.03	9.97	3.44	10.67	9.72	3.45	10.31	9.46	3.53	9.95	9.18	3.63	9.58	8.86	3.86	9.13	8.45	4.20
		30°C	11.59	10.69	3.47	11.26	10.38	3.48	10.92	10.07	3.56	10.56	9.75	3.67	10.19	9.42	3.91	9.72	9.00	4.25
	19°C	24°C	11.94	7.08	3.48	11.52	6.90	3.50	11.08	6.73	3.57	10.64	6.55	3.67	10.17	6.36	3.91	9.59	6.13	4.24
		27°C	11.98	8.64	3.48	11.55	8.45	3.50	11.12	8.26	3.57	10.67	8.07	3.67	10.21	7.87	3.91	9.63	7.63	4.24
		30°C	12.04	10.10	3.48	11.61	9.90	3.50	11.19	9.69	3.58	10.76	9.47	3.68	10.32	9.23	3.92	9.78	8.91	4.25
		33°C	12.28	11.26	3.49	11.91	10.97	3.52	11.56	10.66	3.60	11.19	10.33	3.71	10.81	9.99	3.95	10.32	9.56	4.30
	22°C	27°C	13.11	7.01	3.53	12.64	6.84	3.55	12.18	6.67	3.64	11.69	6.50	3.74	11.19	6.32	3.98	10.56	6.10	4.32
		30°C	13.14	8.60	3.53	12.68	8.41	3.56	12.21	8.23	3.64	11.72	8.05	3.74	11.22	7.86	3.99	10.60	7.62	4.32
		33°C	13.18	10.08	3.54	12.71	9.90	3.56	12.24	9.71	3.64	11.76	9.52	3.75	11.26	9.33	3.99	10.65	9.07	4.33
		36°C	13.27	11.48	3.54	12.82	11.25	3.56	12.37	11.03	3.65	11.93	10.78	3.76	11.48	10.49	4.01	10.95	10.10	4.36
1420	16°C	21°C	11.14	7.49	3.45	10.73	7.29	3.46	10.32	7.10	3.53	9.89	6.90	3.63	9.45	6.69	3.86	8.90	6.43	4.18
		24°C	11.18	9.09	3.46	10.77	8.88	3.46	10.36	8.68	3.53	9.94	8.47	3.63	9.50	8.25	3.86	8.96	7.96	4.19
		27°C	11.32	10.50	3.46	10.94	10.24	3.47	10.58	9.96	3.55	10.20	9.66	3.65	9.82	9.32	3.88	9.36	8.88	4.22
		30°C	11.90	11.26	3.48	11.55	10.93	3.50	11.20	10.60	3.58	10.83	10.26	3.69	10.45	9.90	3.93	9.97	9.46	4.27
	19°C	24°C	12.25	7.46	3.50	11.81	7.27	3.51	11.37	7.08	3.59	10.91	6.89	3.69	10.43	6.69	3.93	9.83	6.44	4.26
		27°C	12.30	9.10	3.50	11.85	8.90	3.52	11.40	8.70	3.59	10.94	8.49	3.69	10.46	8.28	3.93	9.87	8.02	4.26
		30°C	12.35	10.64	3.50	11.91	10.42	3.52	11.48	10.20	3.60	11.04	9.96	3.70	10.58	9.70	3.94	10.03	9.36	4.27
		33°C	12.60	11.86	3.51	12.22	11.56	3.53	11.85	11.23	3.62	11.47	10.87	3.73	11.08	10.50	3.98	10.58	10.04	4.32
	22°C	27°C	13.45	7.39	3.55	12.97	7.21	3.57	12.49	7.02	3.66	11.99	6.84	3.76	11.47	6.64	4.00	10.83	6.40	4.34
		30°C	13.48	9.06	3.55	13.00	8.86	3.57	12.52	8.67	3.66	12.02	8.47	3.76	11.50	8.26	4.01	10.86	8.01	4.35
		33°C	13.52	10.62	3.55	13.04	10.42	3.58	12.55	10.23	3.66	12.05	10.02	3.77	11.54	9.81	4.01	10.92	9.53	4.35
		36°C	13.61	12.09	3.56	13.15	11.85	3.58	12.69	11.61	3.67	12.23	11.34	3.78	11.77	11.03	4.03	11.22	10.61	4.38
1470	16°C	21°C	11.34	7.77	3.47	10.92	7.56	3.48	10.50	7.36	3.54	10.07	7.15	3.64	9.62	6.93	3.87	9.06	6.65	4.20
		24°C	11.39	9.43	3.47	10.96	9.21	3.48	10.55	9.00	3.55	10.11	8.77	3.64	9.67	8.54	3.87	9.12	8.24	4.20
		27°C	11.52	10.89	3.47	11.14	10.62	3.49	10.76	10.32	3.56	10.38	10.00	3.66	10.00	9.65	3.90	9.52	9.19	4.23
		30°C	12.11	11.68	3.50	11.76	11.34	3.51	11.40	10.99	3.59	11.02	10.63	3.70	10.63	10.26	3.94	10.14	9.79	4.29
	19°C	24°C	12.47	7.74	3.51	12.02	7.54	3.53	11.57	7.34	3.60	11.10	7.14	3.70	10.61	6.93	3.94	10.01	6.67	4.27
		27°C	12.52	9.44	3.51	12.06	9.23	3.53	11.61	9.02	3.61	11.14	8.80	3.71	10.65	8.57	3.94	10.04	8.30	4.28
		30°C	12.57	11.04	3.51	12.12	10.81	3.53	11.68	10.57	3.61	11.23	10.32	3.71	10.77	10.05	3.95	10.21	9.69	4.29
		33°C	12.83	12.31	3.53	12.44	11.98	3.55	12.06	11.64	3.63	11.68	11.26	3.74	11.27	10.88	3.99	10.77	10.39	4.34
	22°C	27°C	13.69	7.66	3.56	13.20	7.47	3.59	12.71	7.28	3.67	12.20	7.08	3.78	11.68	6.88	4.02	11.02	6.63	4.36
		30°C	13.73	9.40	3.56	13.23	9.19	3.59	12.74	8.98	3.67	12.23	8.77	3.78	11.71	8.56	4.02	11.05	8.29	4.36
		33°C	13.77	11.02	3.57	13.27	10.81	3.59	12.78	10.60	3.67	12.27	10.38	3.78	11.75	10.16	4.03	11.11	9.86	4.37
		36°C	13.86	12.54	3.57	13.38	12.29	3.60	12.92	12.03	3.68	12.45	11.75	3.79	11.98	11.42	4.04	11.42	10.98	4.39
1540	16°C	21°C	11.47	7.96	3.47	11.05	7.75	3.48	10.62	7.54	3.55	10.19	7.32	3.65	9.73	7.09	3.88	9.16	6.80	4.21
		24°C	11.52	9.66	3.48	11.09	9.44	3.49	10.67	9.22	3.56	10.23	8.98	3.65	9.78	8.74	3.88	9.23	8.43	4.21
		27°C	11.65	11.16	3.48	11.27	10.88	3.49	10.89	10.57	3.57	10.50	10.24	3.67	10.12	9.87	3.91	9.64	9.40	4.24
		30°C	12.25	11.97	3.50	11.89	11.61	3.52	11.53	11.26	3.60	11.15	10.88	3.71	10.76	10.50	3.95	10.26	10.01	4.29
	19°C	24°C	12.62	7.93	3.52	12.16	7.72	3.53	11.70	7.52	3.61	11.23	7.31	3.71	10.74	7.09	3.95	10.13	6.82	4.28
		27°C	12.66	9.67	3.52	12.20	9.45	3.54	11.74	9.23	3.61	11.27	9.01	3.71	10.77	8.78	3.95	10.16	8.49	4.29
		30°C	12.72	11.31	3.52	12.26	11.07	3.54	11.82	10.83	3.62	11.36	10.56	3.72	10.90	10.28	3.96	10.33	9.91	4.30
		33°C	12.98	12.61	3.53	12.59	12.28	3.56	12.20	11.92	3.64	11.81	11.53	3.75	11.41	11.13	4.00	10.90	10.63	4.35
	22°C	27°C	13.85	7.85	3.57	13.36	7.66	3.59	12.86	7.46	3.68	12.34	7.25	3.78	11.81	7.04	4.03	11.15	6.78	4.37
		30°C	13.89	9.63	3.57	13.39	9.42	3.60	12.89	9.20	3.68	12.38	8.98	3.79	11.84	8.76	4.03	11.18	8.48	4.37
		33°C	13.93	11.29	3.57	13.43	11.07	3.60	12.92	10.86	3.68	12.41	10.63	3.79	11.89	10.39	4.03	11.24	10.09	4.38
		36°C	14.02	12.85	3.58	13.54	12.59	3.60	13.07	12.32	3.69	12.60	12.03	3.80	12.12	11.69	4.05	11.56	11.24	4.40

Remark:
AFR: Air flow rate (CFM)
EWB: Entering Wet Bulb Temp. (˚C)
EDB: Entering Dry Bulb Temp. (˚C)
TC: Total Cooling Capacity (kW)
SHC: Sensible Heat Capacity (kW)
PI: Power Input

Notes:
1. Ratings shown are gross capacities which do not include a deduction for indoor fan motor heat.
2. shows nominal capacities.
3. Direct interpolation is permissible. Do not extrapolate.

Heating Mode

ID DB°C	Outdoor WB°C													
	-9		-6		-5		6		12		15		18	
	TC(kW)	SC(kW)	TC(kW)	SC(kW)	TC(kW)	SC(kW)	TC(kW)	SC(kW)	TC(kW)	SC(kW)	TC(kW)	SC(kW)	TC(kW)	SC(kW)
15	6.363	6.363	7.519	7.519	7.904	7.904	12.142	12.142	14.454	14.454	15.610	15.610	16.766	16.766
17	6.313	6.313	7.401	7.401	7.763	7.763	11.856	11.856	14.065	14.065	15.177	15.177	16.289	16.289
19	6.263	6.263	7.283	7.283	7.622	7.622	11.570	11.570	13.676	13.676	14.745	14.745	15.813	15.813
21	6.213	6.213	7.165	7.165	7.482	7.482	11.284	11.284	13.287	13.287	14.312	14.312	15.336	15.336
23	6.097	6.097	7.030	7.030	7.341	7.341	10.966	10.966	12.898	12.898	13.879	13.879	14.860	14.860
25	5.980	5.980	6.895	6.895	7.200	7.200	10.649	10.649	12.509	12.509	13.446	13.446	14.383	14.383
27	5.864	5.864	6.761	6.761	7.060	7.060	10.332	10.332	12.120	12.120	13.013	13.013	13.907	13.907
	FROST REGION													

Model: ACC38CR - ALC~~40CR~~ (3 Phase)

Cooling Mode 40DR

AFR (CFM)	EWB	EDB	Outdoor temperature																	
			19°C			25°C			30°C			35°C			40°C			46°C		
			TC	SHC	PI	TC	SHC	PI	TC	SHC	PI	TC	SHC	PI	TC	SHC	PI	TC	SHC	PI
1350	16°C	21°C	10.85	7.11	3.39	10.46	6.92	3.40	10.06	6.74	3.47	9.65	6.56	3.56	9.22	6.36	3.78	8.68	6.12	4.11
		24°C	10.90	8.63	3.39	10.50	8.43	3.40	10.10	8.25	3.47	9.69	8.05	3.56	9.27	7.84	3.79	8.74	7.58	4.11
		27°C	11.03	9.97	3.40	10.67	9.72	3.41	10.31	9.46	3.48	9.95	9.18	3.58	9.58	8.86	3.81	9.13	8.45	4.14
		30°C	11.59	10.69	3.42	11.26	10.38	3.44	10.92	10.07	3.51	10.56	9.75	3.62	10.19	9.42	3.86	9.72	9.00	4.19
	19°C	24°C	11.94	7.08	3.43	11.52	6.90	3.45	11.08	6.73	3.52	10.64	6.55	3.62	10.17	6.36	3.85	9.59	6.13	4.18
		27°C	11.98	8.64	3.44	11.55	8.45	3.45	11.12	8.26	3.52	10.67	8.07	3.62	10.21	7.87	3.86	9.63	7.63	4.18
		30°C	12.04	10.10	3.44	11.61	9.90	3.45	11.19	9.69	3.53	10.76	9.47	3.63	10.32	9.23	3.86	9.78	8.91	4.20
		33°C	12.28	11.26	3.45	11.91	10.97	3.47	11.56	10.66	3.55	11.19	10.33	3.66	10.81	9.99	3.90	10.32	9.56	4.24
	22°C	27°C	13.11	7.01	3.48	12.64	6.84	3.51	12.18	6.67	3.59	11.69	6.50	3.69	11.19	6.32	3.93	10.56	6.10	4.26
		30°C	13.14	8.60	3.49	12.68	8.41	3.51	12.21	8.23	3.59	11.72	8.05	3.69	11.22	7.86	3.93	10.60	7.62	4.26
		33°C	13.18	10.08	3.49	12.71	9.90	3.51	12.24	9.71	3.59	11.76	9.52	3.70	11.26	9.33	3.94	10.65	9.07	4.27
		36°C	13.27	11.48	3.49	12.82	11.25	3.52	12.37	11.03	3.60	11.93	10.78	3.71	11.48	10.49	3.95	10.95	10.10	4.30
1420	16°C	21°C	11.14	7.49	3.41	10.73	7.29	3.42	10.32	7.10	3.48	9.89	6.90	3.58	9.45	6.69	3.80	8.90	6.43	4.13
		24°C	11.18	9.09	3.41	10.77	8.88	3.42	10.36	8.68	3.49	9.94	8.47	3.58	9.50	8.25	3.81	8.96	7.96	4.13
		27°C	11.32	10.50	3.41	10.94	10.24	3.43	10.58	9.96	3.50	10.20	9.66	3.60	9.82	9.32	3.83	9.36	8.88	4.16
		30°C	11.90	11.26	3.44	11.55	10.93	3.45	11.20	10.60	3.53	10.83	10.26	3.64	10.45	9.90	3.88	9.97	9.46	4.21
	19°C	24°C	12.25	7.46	3.45	11.81	7.27	3.47	11.37	7.08	3.54	10.91	6.89	3.64	10.43	6.69	3.87	9.83	6.44	4.20
		27°C	12.30	9.10	3.45	11.85	8.90	3.47	11.40	8.70	3.54	10.94	8.49	3.64	10.46	8.28	3.88	9.87	8.02	4.20
		30°C	12.35	10.64	3.45	11.91	10.42	3.47	11.48	10.20	3.55	11.04	9.96	3.65	10.58	9.70	3.88	10.03	9.36	4.22
		33°C	12.60	11.86	3.47	12.22	11.56	3.49	11.85	11.23	3.57	11.47	10.87	3.68	11.08	10.50	3.92	10.58	10.04	4.26
	22°C	27°C	13.45	7.39	3.50	12.97	7.21	3.52	12.49	7.02	3.61	11.99	6.84	3.71	11.47	6.64	3.95	10.83	6.40	4.28
		30°C	13.48	9.06	3.50	13.00	8.86	3.53	12.52	8.67	3.61	12.02	8.47	3.71	11.50	8.26	3.95	10.86	8.01	4.29
		33°C	13.52	10.62	3.50	13.04	10.42	3.53	12.55	10.23	3.61	12.05	10.02	3.72	11.54	9.81	3.96	10.92	9.53	4.29
		36°C	13.61	12.09	3.51	13.15	11.85	3.53	12.69	11.61	3.62	12.23	11.34	3.73	11.77	11.03	3.97	11.22	10.61	4.32
1470	16°C	21°C	11.34	7.77	3.42	10.92	7.56	3.43	10.50	7.36	3.50	10.07	7.15	3.59	9.62	6.93	3.82	9.06	6.65	4.14
		24°C	11.39	9.43	3.42	10.96	9.21	3.43	10.55	9.00	3.50	10.11	8.77	3.59	9.67	8.54	3.82	9.12	8.24	4.14
		27°C	11.52	10.89	3.43	11.14	10.62	3.44	10.76	10.32	3.51	10.38	10.00	3.61	10.00	9.65	3.84	9.52	9.19	4.18
		30°C	12.11	11.68	3.45	11.76	11.34	3.47	11.40	10.99	3.54	11.02	10.63	3.65	10.63	10.26	3.89	10.14	9.79	4.23
	19°C	24°C	12.47	7.74	3.46	12.02	7.54	3.48	11.57	7.34	3.55	11.10	7.14	3.65	10.61	6.93	3.89	10.01	6.67	4.22
		27°C	12.52	9.44	3.46	12.06	9.23	3.48	11.61	9.02	3.56	11.14	8.80	3.66	10.65	8.57	3.89	10.04	8.30	4.22
		30°C	12.57	11.04	3.47	12.12	10.81	3.48	11.68	10.57	3.56	11.23	10.32	3.66	10.77	10.05	3.90	10.21	9.69	4.23
		33°C	12.83	12.31	3.48	12.44	11.98	3.50	12.06	11.64	3.58	11.68	11.26	3.69	11.27	10.88	3.94	10.77	10.39	4.28
	22°C	27°C	13.69	7.66	3.51	13.20	7.47	3.54	12.71	7.28	3.62	12.20	7.08	3.72	11.68	6.88	3.96	11.02	6.63	4.30
		30°C	13.73	9.40	3.52	13.23	9.19	3.54	12.74	8.98	3.62	12.23	8.77	3.73	11.71	8.56	3.97	11.05	8.29	4.30
		33°C	13.77	11.02	3.52	13.27	10.81	3.54	12.78	10.60	3.62	12.27	10.38	3.73	11.75	10.16	3.97	11.11	9.86	4.31
		36°C	13.86	12.54	3.52	13.38	12.29	3.55	12.92	12.03	3.63	12.45	11.75	3.74	11.98	11.42	3.99	11.42	10.98	4.34
1540	16°C	21°C	11.47	7.96	3.43	11.05	7.75	3.44	10.62	7.54	3.50	10.19	7.32	3.60	9.73	7.09	3.83	9.16	6.80	4.15
		24°C	11.52	9.66	3.43	11.09	9.44	3.44	10.67	9.22	3.51	10.23	8.98	3.60	9.78	8.74	3.83	9.23	8.43	4.15
		27°C	11.65	11.16	3.43	11.27	10.88	3.45	10.89	10.57	3.52	10.50	10.24	3.62	10.12	9.87	3.85	9.64	9.40	4.19
		30°C	12.25	11.97	3.46	11.89	11.61	3.47	11.53	11.26	3.55	11.15	10.88	3.66	10.76	10.50	3.90	10.26	10.01	4.24
	19°C	24°C	12.62	7.93	3.47	12.16	7.72	3.49	11.70	7.52	3.56	11.23	7.31	3.66	10.74	7.09	3.90	10.13	6.82	4.22
		27°C	12.66	9.67	3.47	12.20	9.45	3.49	11.74	9.23	3.56	11.27	9.01	3.66	10.77	8.78	3.90	10.16	8.49	4.23
		30°C	12.72	11.31	3.47	12.26	11.07	3.49	11.82	10.83	3.57	11.36	10.56	3.67	10.90	10.28	3.91	10.33	9.91	4.24
		33°C	12.98	12.61	3.49	12.59	12.28	3.51	12.20	11.92	3.59	11.81	11.53	3.70	11.41	11.13	3.94	10.90	10.63	4.29
	22°C	27°C	13.85	7.85	3.52	13.36	7.66	3.55	12.86	7.46	3.63	12.34	7.25	3.73	11.81	7.04	3.97	11.15	6.78	4.31
		30°C	13.89	9.63	3.52	13.39	9.42	3.55	12.89	9.20	3.63	12.38	8.98	3.74	11.84	8.76	3.98	11.18	8.48	4.31
		33°C	13.93	11.29	3.53	13.43	11.07	3.55	12.92	10.86	3.63	12.41	10.63	3.74	11.89	10.39	3.98	11.24	10.09	4.32
		36°C	14.02	12.85	3.53	13.54	12.59	3.56	13.07	12.32	3.64	12.60	12.03	3.75	12.12	11.69	4.00	11.56	11.24	4.34

Remark:
AFR: Air flow rate (CFM)
EWB: Entering Wet Bulb Temp. (˚C)
EDB: Entering Dry Bulb Temp. (˚C)
TC: Total Cooling Capacity (kW)
SHC: Sensible Heat Capacity (kW)
PI: Power Input

Notes:
1. Ratings shown are gross capacities which do not include a deduction for indoor fan motor heat.
2. shows nominal capacities.
3. Direct interpolation is permissible. Do not extrapolate.

Heating Mode

ID DB°C	Outdoor WB°C													
	-9		-6		-5		6		12		15		18	
	TC(kW)	SC(kW)	TC(kW)	SC(kW)	TC(kW)	SC(kW)	TC(kW)	SC(kW)	TC(kW)	SC(kW)	TC(kW)	SC(kW)	TC(kW)	SC(kW)
15	6.363	6.363	7.519	7.519	7.904	7.904	12.142	12.142	14.454	14.454	15.610	15.610	16.766	16.766
17	6.313	6.313	7.401	7.401	7.763	7.763	11.856	11.856	14.065	14.065	15.177	15.177	16.289	16.289
19	6.263	6.263	7.283	7.283	7.622	7.622	11.570	11.570	13.676	13.676	14.745	14.745	15.813	15.813
21	6.213	6.213	7.165	7.165	7.482	7.482	11.284	11.284	13.287	13.287	14.312	14.312	15.336	15.336
23	6.097	6.097	7.030	7.030	7.341	7.341	10.966	10.966	12.898	12.898	13.879	13.879	14.860	14.860
25	5.980	5.980	6.895	6.895	7.200	7.200	10.649	10.649	12.509	12.509	13.446	13.446	14.383	14.383
27	5.864	5.864	6.761	6.761	7.060	7.060	10.332	10.332	12.120	12.120	13.013	13.013	13.907	13.907
	FROST REGION													

Model: ACC40CR - ALC~~35CR~~ 35DR

Cooling Mode

AFR (CFM)	EWB	EDB	Outdoor temperature																	
			19°C			25°C			30°C			35°C			40°C			46°C		
			TC	SHC	PI	TC	SHC	PI	TC	SHC	PI	TC	SHC	PI	TC	SHC	PI	TC	SHC	PI
900	16°C	21°C	9.56	6.50	3.16	9.21	6.33	3.16	8.86	6.17	3.23	8.50	6.00	3.31	8.12	5.82	3.52	7.65	5.60	3.82
		24°C	9.60	7.89	3.16	9.25	7.71	3.17	8.90	7.54	3.23	8.54	7.36	3.32	8.16	7.17	3.53	7.70	6.93	3.83
		27°C	9.71	9.11	3.16	9.40	8.89	3.17	9.09	8.65	3.24	8.76	8.39	3.33	8.44	8.10	3.55	8.04	7.73	3.86
		30°C	10.21	9.77	3.18	9.92	9.49	3.20	9.62	9.21	3.27	9.31	8.92	3.37	8.98	8.61	3.59	8.56	8.23	3.90
	19°C	24°C	10.52	6.47	3.20	10.14	6.31	3.21	9.76	6.15	3.28	9.37	5.99	3.37	8.96	5.82	3.59	8.45	5.61	3.89
		27°C	10.56	7.90	3.20	10.18	7.72	3.21	9.80	7.55	3.28	9.40	7.38	3.37	8.99	7.20	3.59	8.48	6.98	3.90
		30°C	10.60	9.23	3.20	10.23	9.05	3.22	9.86	8.86	3.29	9.48	8.66	3.38	9.09	8.44	3.60	8.62	8.15	3.91
		33°C	10.82	10.30	3.21	10.50	10.03	3.23	10.18	9.75	3.31	9.86	9.45	3.41	9.52	9.13	3.63	9.09	8.74	3.95
	22°C	27°C	11.55	6.41	3.24	11.14	6.26	3.27	10.73	6.10	3.34	10.30	5.94	3.44	9.86	5.78	3.66	9.31	5.57	3.97
		30°C	11.58	7.86	3.25	11.17	7.69	3.27	10.75	7.53	3.34	10.33	7.36	3.44	9.88	7.18	3.66	9.33	6.97	3.97
		33°C	11.61	9.22	3.25	11.20	9.05	3.27	10.78	8.88	3.35	10.36	8.71	3.44	9.92	8.53	3.67	9.38	8.29	3.98
		36°C	11.69	10.49	3.25	11.29	10.29	3.27	10.90	10.08	3.35	10.51	9.85	3.45	10.12	9.59	3.68	9.64	9.24	4.00
990	16°C	21°C	9.81	6.85	3.17	9.45	6.67	3.18	9.09	6.49	3.24	8.71	6.31	3.33	8.33	6.12	3.54	7.84	5.88	3.84
		24°C	9.85	8.31	3.17	9.49	8.12	3.18	9.13	7.94	3.25	8.75	7.74	3.33	8.37	7.54	3.55	7.89	7.28	3.85
		27°C	9.97	9.60	3.18	9.64	9.36	3.19	9.32	9.11	3.26	8.99	8.83	3.35	8.65	8.52	3.57	8.25	8.12	3.88
		30°C	10.48	10.29	3.20	10.17	10.00	3.22	9.86	9.70	3.29	9.54	9.38	3.39	9.20	9.06	3.61	8.78	8.65	3.92
	19°C	24°C	10.79	6.82	3.21	10.41	6.65	3.23	10.01	6.48	3.30	9.61	6.30	3.39	9.18	6.12	3.61	8.66	5.89	3.91
		27°C	10.83	8.32	3.22	10.44	8.13	3.23	10.05	7.95	3.30	9.64	7.76	3.39	9.22	7.57	3.61	8.69	7.33	3.92
		30°C	10.88	9.73	3.22	10.49	9.53	3.23	10.11	9.33	3.30	9.72	9.11	3.40	9.32	8.87	3.62	8.84	8.56	3.93
		33°C	11.10	10.85	3.23	10.77	10.57	3.25	10.44	10.26	3.32	10.11	9.94	3.43	9.76	9.60	3.65	9.32	9.18	3.97
	22°C	27°C	11.85	6.75	3.26	11.43	6.59	3.28	11.00	6.42	3.36	10.56	6.25	3.46	10.11	6.07	3.68	9.54	5.86	3.99
		30°C	11.88	8.28	3.26	11.45	8.10	3.28	11.03	7.93	3.36	10.59	7.74	3.46	10.13	7.55	3.68	9.57	7.32	3.99
		33°C	11.91	9.72	3.26	11.49	9.53	3.29	11.06	9.35	3.36	10.62	9.16	3.46	10.17	8.97	3.68	9.62	8.71	4.00
		36°C	11.99	11.06	3.27	11.58	10.84	3.29	11.18	10.62	3.37	10.78	10.37	3.47	10.37	10.09	3.70	9.89	9.71	4.02
1060	16°C	21°C	9.99	7.10	3.18	9.62	6.92	3.19	9.25	6.73	3.26	8.87	6.54	3.34	8.47	6.34	3.56	7.98	6.08	3.86
		24°C	10.03	8.62	3.19	9.66	8.42	3.20	9.29	8.23	3.26	8.91	8.02	3.35	8.52	7.81	3.56	8.03	7.53	3.86
		27°C	10.15	9.96	3.19	9.81	9.71	3.20	9.48	9.44	3.27	9.14	9.14	3.36	8.81	8.81	3.58	8.39	8.39	3.89
		30°C	10.67	10.67	3.21	10.36	10.36	3.23	10.04	10.04	3.30	9.71	9.71	3.40	9.37	9.37	3.62	8.93	8.93	3.94
	19°C	24°C	10.99	7.08	3.23	10.59	6.89	3.24	10.19	6.71	3.31	9.78	6.53	3.40	9.35	6.33	3.62	8.81	6.10	3.93
		27°C	11.03	8.63	3.23	10.63	8.44	3.24	10.23	8.24	3.31	9.81	8.05	3.41	9.38	7.84	3.62	8.85	7.59	3.93
		30°C	11.08	10.09	3.23	10.68	9.88	3.25	10.29	9.67	3.32	9.89	9.44	3.41	9.49	9.19	3.63	8.99	8.86	3.94
		33°C	11.30	11.25	3.24	10.96	10.96	3.26	10.63	10.63	3.34	10.29	10.29	3.44	9.93	9.93	3.67	9.49	9.49	3.99
	22°C	27°C	12.06	7.01	3.27	11.63	6.84	3.30	11.20	6.66	3.37	10.75	6.48	3.47	10.29	6.29	3.69	9.71	6.06	4.00
		30°C	12.09	8.59	3.27	11.66	8.40	3.30	11.22	8.21	3.37	10.77	8.02	3.47	10.31	7.82	3.69	9.74	7.58	4.01
		33°C	12.13	10.08	3.28	11.69	9.89	3.30	11.25	9.69	3.38	10.81	9.49	3.47	10.35	9.29	3.70	9.79	9.02	4.01
		36°C	12.21	11.47	3.28	11.79	11.24	3.30	11.38	11.00	3.38	10.97	10.74	3.49	10.56	10.45	3.71	10.06	10.04	4.04
1100	16°C	21°C	10.10	7.28	3.19	9.73	7.08	3.20	9.36	6.89	3.26	8.97	6.69	3.35	8.57	6.49	3.56	8.07	6.22	3.86
		24°C	10.15	8.83	3.19	9.77	8.63	3.20	9.40	8.43	3.27	9.02	8.21	3.35	8.62	7.99	3.57	8.13	7.70	3.87
		27°C	10.27	10.21	3.20	9.93	9.93	3.21	9.59	9.59	3.28	9.25	9.25	3.37	8.91	8.91	3.59	8.49	8.49	3.90
		30°C	10.79	10.79	3.22	10.48	10.48	3.24	10.16	10.16	3.31	9.82	9.82	3.41	9.48	9.48	3.63	9.04	9.04	3.95
	19°C	24°C	11.12	7.25	3.23	10.72	7.06	3.25	10.31	6.87	3.32	9.89	6.68	3.41	9.46	6.48	3.63	8.92	6.23	3.93
		27°C	11.16	8.84	3.23	10.75	8.64	3.25	10.34	8.44	3.32	9.93	8.24	3.41	9.49	8.02	3.63	8.95	7.76	3.94
		30°C	11.21	10.34	3.24	10.80	10.12	3.25	10.41	9.90	3.32	10.01	9.66	3.42	9.60	9.40	3.64	9.10	9.06	3.95
		33°C	11.43	11.43	3.25	11.09	11.09	3.27	10.75	10.75	3.34	10.41	10.41	3.45	10.05	10.05	3.67	9.60	9.60	3.99
	22°C	27°C	12.20	7.18	3.28	11.77	7.00	3.30	11.33	6.82	3.38	10.87	6.63	3.48	10.41	6.44	3.70	9.82	6.20	4.01
		30°C	12.24	8.81	3.28	11.80	8.61	3.30	11.35	8.41	3.38	10.90	8.21	3.48	10.43	8.01	3.70	9.85	7.75	4.02
		33°C	12.27	10.33	3.28	11.83	10.13	3.31	11.39	9.93	3.38	10.93	9.72	3.48	10.47	9.50	3.71	9.90	9.22	4.02
		36°C	12.35	11.75	3.29	11.93	11.51	3.31	11.51	11.27	3.39	11.10	11.00	3.49	10.68	10.68	3.72	10.18	10.18	4.05

Remark:
AFR: Air flow rate (CFM)
EWB: Entering Wet Bulb Temp. (˚C)
EDB: Entering Dry Bulb Temp. (˚C)

TC: Total Cooling Capacity (kW)
SHC: Sensible Heat Capacity (kW)
PI: Power Input

Notes:
1. Ratings shown are gross capacities which do not include a deduction for indoor fan motor heat.
2. shows nominal capacities.
3. Direct interpolation is permissible. Do not extrapolate.

Heating Mode

ID DB°C	Outdoor WB°C													
	-9		-6		-5		6		12		15		18	
	TC(kW)	SC(kW)	TC(kW)	SC(kW)	TC(kW)	SC(kW)	TC(kW)	SC(kW)	TC(kW)	SC(kW)	TC(kW)	SC(kW)	TC(kW)	SC(kW)
15	4.651	4.651	5.850	5.850	6.249	6.249	10.644	10.644	13.041	13.041	14.239	14.239	15.438	15.438
17	4.527	4.527	5.729	5.729	6.129	6.129	10.445	10.445	12.685	12.685	13.842	13.842	14.999	14.999
19	4.404	4.404	5.608	5.608	6.009	6.009	10.247	10.247	12.329	12.329	13.445	13.445	14.560	14.560
21	4.280	4.280	5.487	5.487	5.890	5.890	10.049	10.049	11.974	11.974	13.047	13.047	14.121	14.121
23	4.278	4.278	5.397	5.397	5.770	5.770	9.698	9.698	11.618	11.618	12.650	12.650	13.682	13.682
25	4.276	4.276	5.306	5.306	5.650	5.650	9.347	9.347	11.262	11.262	12.252	12.252	13.243	13.243
27	4.274	4.274	5.216	5.216	5.530	5.530	8.997	8.997	10.906	10.906	11.855	11.855	12.804	12.804
	FROST REGION													

Model: ACC40CR - ALC~~40CR~~ 40DR

Cooling Mode

AFR (CFM)	EWB	EDB	Outdoor temperature																	
			19°C			25°C			30°C			35°C			40°C			46°C		
			TC	SHC	PI	TC	SHC	PI	TC	SHC	PI	TC	SHC	PI	TC	SHC	PI	TC	SHC	PI
900	16°C	21°C	10.99	6.28	3.30	10.59	6.12	3.30	10.19	5.96	3.37	9.77	5.80	3.46	9.33	5.63	3.68	8.79	5.41	3.99
		24°C	11.04	7.63	3.30	10.63	7.46	3.31	10.23	7.29	3.37	9.81	7.12	3.46	9.38	6.94	3.68	8.85	6.70	4.00
		27°C	11.17	8.81	3.30	10.80	8.60	3.31	10.44	8.37	3.38	10.07	8.12	3.48	9.70	7.83	3.71	9.24	7.47	4.03
		30°C	11.74	9.45	3.32	11.40	9.18	3.34	11.05	8.91	3.42	10.70	8.62	3.52	10.32	8.33	3.75	9.84	7.96	4.08
	19°C	24°C	12.09	6.26	3.34	11.66	6.10	3.35	11.22	5.95	3.42	10.77	5.79	3.52	10.30	5.62	3.75	9.71	5.42	4.06
		27°C	12.13	7.64	3.34	11.70	7.47	3.36	11.26	7.31	3.43	10.81	7.14	3.52	10.33	6.96	3.75	9.75	6.75	4.07
		30°C	12.19	8.93	3.34	11.75	8.75	3.36	11.33	8.57	3.43	10.90	8.37	3.53	10.45	8.16	3.76	9.91	7.88	4.08
		33°C	12.43	9.96	3.35	12.06	9.70	3.37	11.70	9.43	3.45	11.33	9.14	3.56	10.94	8.83	3.79	10.45	8.45	4.13
	22°C	27°C	13.27	6.20	3.39	12.80	6.05	3.41	12.33	5.90	3.49	11.84	5.75	3.59	11.33	5.59	3.82	10.70	5.39	4.14
		30°C	13.31	7.60	3.39	12.83	7.44	3.41	12.36	7.28	3.49	11.87	7.12	3.59	11.36	6.95	3.82	10.73	6.74	4.15
		33°C	13.34	8.92	3.39	12.87	8.75	3.41	12.39	8.59	3.49	11.90	8.42	3.59	11.40	8.25	3.83	10.78	8.02	4.15
		36°C	13.43	10.15	3.39	12.98	9.95	3.42	12.53	9.75	3.50	12.08	9.53	3.61	11.63	9.28	3.84	11.08	8.93	4.18
990	16°C	21°C	11.28	6.62	3.31	10.86	6.45	3.32	10.45	6.28	3.39	10.02	6.10	3.48	9.57	5.92	3.70	9.01	5.69	4.01
		24°C	11.32	8.04	3.31	10.91	7.85	3.32	10.49	7.68	3.39	10.06	7.49	3.48	9.62	7.29	3.70	9.07	7.04	4.02
		27°C	11.46	9.29	3.32	11.08	9.05	3.33	10.71	8.81	3.40	10.33	8.54	3.50	9.95	8.24	3.73	9.48	7.85	4.05
		30°C	12.04	9.96	3.34	11.69	9.67	3.36	11.34	9.38	3.43	10.97	9.07	3.54	10.58	8.76	3.77	10.09	8.36	4.10
	19°C	24°C	12.41	6.60	3.36	11.96	6.43	3.37	11.51	6.26	3.44	11.04	6.09	3.54	10.56	5.91	3.77	9.96	5.70	4.08
		27°C	12.45	8.05	3.36	12.00	7.87	3.37	11.55	7.69	3.45	11.08	7.51	3.54	10.59	7.32	3.77	9.99	7.09	4.09
		30°C	12.50	9.41	3.36	12.06	9.22	3.38	11.62	9.02	3.45	11.17	8.81	3.55	10.71	8.58	3.78	10.16	8.28	4.10
		33°C	12.76	10.49	3.37	12.37	10.22	3.39	12.00	9.93	3.47	11.62	9.61	3.58	11.22	9.29	3.81	10.72	8.88	4.15
	22°C	27°C	13.62	6.53	3.40	13.13	6.37	3.43	12.64	6.21	3.51	12.14	6.05	3.61	11.61	5.87	3.84	10.97	5.66	4.17
		30°C	13.65	8.01	3.41	13.17	7.84	3.43	12.67	7.66	3.51	12.17	7.49	3.61	11.64	7.31	3.84	11.00	7.08	4.17
		33°C	13.69	9.40	3.41	13.20	9.22	3.43	12.71	9.04	3.51	12.20	8.86	3.61	11.69	8.67	3.85	11.05	8.43	4.17
		36°C	13.78	10.69	3.41	13.31	10.48	3.44	12.85	10.27	3.52	12.38	10.03	3.63	11.92	9.76	3.86	11.36	9.39	4.20
1060	16°C	21°C	11.48	6.87	3.32	11.06	6.69	3.33	10.63	6.51	3.40	10.19	6.32	3.49	9.74	6.13	3.71	9.17	5.88	4.03
		24°C	11.53	8.34	3.33	11.10	8.15	3.34	10.68	7.96	3.40	10.24	7.76	3.49	9.79	7.55	3.72	9.23	7.28	4.03
		27°C	11.66	9.63	3.33	11.28	9.39	3.34	10.90	9.13	3.41	10.51	8.85	3.51	10.12	8.53	3.74	9.64	8.13	4.06
		30°C	12.26	10.33	3.35	11.90	10.03	3.37	11.54	9.72	3.45	11.16	9.40	3.55	10.76	9.07	3.78	10.27	8.65	4.11
	19°C	24°C	12.63	6.84	3.37	12.17	6.67	3.38	11.71	6.49	3.46	11.24	6.31	3.55	10.74	6.12	3.78	10.13	5.89	4.10
		27°C	12.67	8.35	3.37	12.21	8.16	3.39	11.75	7.97	3.46	11.28	7.78	3.56	10.78	7.58	3.78	10.17	7.34	4.10
		30°C	12.73	9.76	3.37	12.27	9.56	3.39	11.83	9.35	3.46	11.37	9.13	3.56	10.90	8.89	3.79	10.33	8.57	4.11
		33°C	12.99	10.88	3.38	12.59	10.60	3.40	12.21	10.29	3.48	11.82	9.96	3.59	11.42	9.62	3.83	10.91	9.19	4.16
	22°C	27°C	13.86	6.78	3.42	13.37	6.61	3.44	12.87	6.44	3.52	12.35	6.26	3.62	11.82	6.08	3.85	11.16	5.86	4.18
		30°C	13.90	8.31	3.42	13.40	8.13	3.44	12.90	7.94	3.52	12.38	7.76	3.62	11.85	7.57	3.86	11.19	7.33	4.18
		33°C	13.94	9.75	3.42	13.44	9.56	3.44	12.94	9.37	3.52	12.42	9.18	3.63	11.90	8.98	3.86	11.25	8.72	4.19
		36°C	14.03	11.09	3.42	13.55	10.87	3.45	13.08	10.64	3.53	12.60	10.39	3.64	12.13	10.10	3.88	11.56	9.71	4.22
1100	16°C	21°C	11.61	7.04	3.33	11.19	6.85	3.34	10.76	6.67	3.41	10.31	6.47	3.50	9.85	6.27	3.72	9.28	6.02	4.04
		24°C	11.66	8.54	3.33	11.23	8.34	3.34	10.80	8.15	3.41	10.36	7.94	3.50	9.91	7.73	3.72	9.34	7.45	4.04
		27°C	11.80	9.87	3.34	11.41	9.62	3.35	11.03	9.35	3.42	10.63	9.06	3.52	10.24	8.73	3.75	9.76	8.31	4.07
		30°C	12.41	10.58	3.36	12.04	10.27	3.38	11.67	9.96	3.45	11.29	9.62	3.56	10.89	9.28	3.79	10.39	8.85	4.12
	19°C	24°C	12.78	7.01	3.38	12.32	6.83	3.39	11.85	6.65	3.46	11.37	6.46	3.56	10.87	6.27	3.79	10.25	6.03	4.11
		27°C	12.82	8.55	3.38	12.36	8.36	3.39	11.89	8.16	3.47	11.41	7.96	3.56	10.91	7.76	3.79	10.29	7.51	4.11
		30°C	12.88	10.00	3.38	12.41	9.79	3.40	11.96	9.58	3.47	11.51	9.34	3.57	11.03	9.09	3.80	10.46	8.76	4.12
		33°C	13.14	11.15	3.39	12.74	10.86	3.41	12.36	10.54	3.49	11.96	10.20	3.60	11.55	9.84	3.84	11.03	9.40	4.17
	22°C	27°C	14.03	6.94	3.42	13.52	6.77	3.45	13.02	6.59	3.53	12.50	6.41	3.63	11.96	6.23	3.86	11.29	5.99	4.19
		30°C	14.06	8.52	3.43	13.56	8.33	3.45	13.05	8.14	3.53	12.53	7.94	3.63	11.99	7.74	3.87	11.32	7.50	4.19
		33°C	14.10	9.99	3.43	13.60	9.79	3.45	13.09	9.60	3.53	12.57	9.40	3.64	12.04	9.19	3.87	11.38	8.92	4.20
		36°C	14.19	11.37	3.43	13.71	11.14	3.46	13.23	10.90	3.54	12.75	10.64	3.65	12.27	10.34	3.89	11.70	9.94	4.22

Remark:
AFR: Air flow rate (CFM)
EWB: Entering Wet Bulb Temp. (˚C)
EDB: Entering Dry Bulb Temp. (˚C)
TC: Total Cooling Capacity (kW)
SHC: Sensible Heat Capacity (kW)
PI: Power Input

Notes:
1. Ratings shown are gross capacities which do not include a deduction for indoor fan motor heat.
2. shows nominal capacities.
3. Direct interpolation is permissible. Do not extrapolate.

Heating Mode

ID DB°C	Outdoor WB°C													
	-9		-6		-5		6		12		15		18	
	TC(kW)	SC(kW)	TC(kW)	SC(kW)	TC(kW)	SC(kW)	TC(kW)	SC(kW)	TC(kW)	SC(kW)	TC(kW)	SC(kW)	TC(kW)	SC(kW)
15	6.607	6.607	7.814	7.814	8.216	8.216	12.639	12.639	15.052	15.052	16.258	16.258	17.464	17.464
17	6.554	6.554	7.691	7.691	8.069	8.069	12.334	12.334	14.647	14.647	15.807	15.807	16.968	16.968
19	6.501	6.501	7.567	7.567	7.923	7.923	12.029	12.029	14.241	14.241	15.356	15.356	16.471	16.471
21	6.448	6.448	7.444	7.444	7.776	7.776	11.723	11.723	13.836	13.836	14.906	14.906	15.975	15.975
23	6.328	6.328	7.305	7.305	7.630	7.630	11.400	11.400	13.431	13.431	14.455	14.455	15.479	15.479
25	6.209	6.209	7.165	7.165	7.484	7.484	11.078	11.078	13.026	13.026	14.004	14.004	14.982	14.982
27	6.089	6.089	7.025	7.025	7.337	7.337	10.755	10.755	12.621	12.621	13.553	13.553	14.486	14.486
	FROST REGION													

Model: ACC40CR - ALC~~40CR~~ (3 Phase)
Cooling Mode

40DR

AFR (CFM)	EWB	EDB	Outdoor temperature																	
			19°C			25°C			30°C			35°C			40°C			46°C		
			TC	SHC	PI	TC	SHC	PI	TC	SHC	PI	TC	SHC	PI	TC	SHC	PI	TC	SHC	PI
900	16°C	21°C	10.99	6.28	3.25	10.59	6.12	3.26	10.19	5.96	3.32	9.77	5.80	3.41	9.33	5.63	3.63	8.79	5.41	3.94
		24°C	11.04	7.63	3.25	10.63	7.46	3.26	10.23	7.29	3.33	9.81	7.12	3.41	9.38	6.94	3.63	8.85	6.70	3.94
		27°C	11.17	8.81	3.26	10.80	8.60	3.27	10.44	8.37	3.34	10.07	8.12	3.43	9.70	7.83	3.65	9.24	7.47	3.97
		30°C	11.74	9.45	3.28	11.40	9.18	3.29	11.05	8.91	3.37	10.70	8.62	3.47	10.32	8.33	3.70	9.84	7.96	4.02
	19°C	24°C	12.09	6.26	3.29	11.66	6.10	3.31	11.22	5.95	3.38	10.77	5.79	3.47	10.30	5.62	3.69	9.71	5.42	4.01
		27°C	12.13	7.64	3.29	11.70	7.47	3.31	11.26	7.31	3.38	10.81	7.14	3.47	10.33	6.96	3.70	9.75	6.75	4.01
		30°C	12.19	8.93	3.30	11.75	8.75	3.31	11.33	8.57	3.38	10.90	8.37	3.48	10.45	8.16	3.70	9.91	7.88	4.02
		33°C	12.43	9.96	3.31	12.06	9.70	3.33	11.70	9.43	3.40	11.33	9.14	3.51	10.94	8.83	3.74	10.45	8.45	4.07
	22°C	27°C	13.27	6.20	3.34	12.80	6.05	3.36	12.33	5.90	3.44	11.84	5.75	3.54	11.33	5.59	3.77	10.70	5.39	4.09
		30°C	13.31	7.60	3.34	12.83	7.44	3.36	12.36	7.28	3.44	11.87	7.12	3.54	11.36	6.95	3.77	10.73	6.74	4.09
		33°C	13.34	8.92	3.34	12.87	8.75	3.37	12.39	8.59	3.44	11.90	8.42	3.54	11.40	8.25	3.77	10.78	8.02	4.09
		36°C	13.43	10.15	3.35	12.98	9.95	3.37	12.53	9.75	3.45	12.08	9.53	3.56	11.63	9.28	3.79	11.08	8.93	4.12
990	16°C	21°C	11.28	6.62	3.27	10.86	6.45	3.27	10.45	6.28	3.34	10.02	6.10	3.43	9.57	5.92	3.65	9.01	5.69	3.96
		24°C	11.32	8.04	3.27	10.91	7.85	3.28	10.49	7.68	3.34	10.06	7.49	3.43	9.62	7.29	3.65	9.07	7.04	3.96
		27°C	11.46	9.29	3.27	11.08	9.05	3.28	10.71	8.81	3.35	10.33	8.54	3.45	9.95	8.24	3.67	9.48	7.85	3.99
		30°C	12.04	9.96	3.29	11.69	9.67	3.31	11.34	9.38	3.39	10.97	9.07	3.49	10.58	8.76	3.72	10.09	8.36	4.04
	19°C	24°C	12.41	6.60	3.31	11.96	6.43	3.32	11.51	6.26	3.39	11.04	6.09	3.49	10.56	5.91	3.71	9.96	5.70	4.03
		27°C	12.45	8.05	3.31	12.00	7.87	3.33	11.55	7.69	3.40	11.08	7.51	3.49	10.59	7.32	3.72	9.99	7.09	4.03
		30°C	12.50	9.41	3.31	12.06	9.22	3.33	11.62	9.02	3.40	11.17	8.81	3.50	10.71	8.58	3.72	10.16	8.28	4.04
		33°C	12.76	10.49	3.32	12.37	10.22	3.34	12.00	9.93	3.42	11.62	9.61	3.53	11.22	9.29	3.76	10.72	8.88	4.09
	22°C	27°C	13.62	6.53	3.36	13.13	6.37	3.38	12.64	6.21	3.46	12.14	6.05	3.56	11.61	5.87	3.79	10.97	5.66	4.11
		30°C	13.65	8.01	3.36	13.17	7.84	3.38	12.67	7.66	3.46	12.17	7.49	3.56	11.64	7.31	3.79	11.00	7.08	4.11
		33°C	13.69	9.40	3.36	13.20	9.22	3.38	12.71	9.04	3.46	12.20	8.86	3.56	11.69	8.67	3.79	11.05	8.43	4.11
		36°C	13.78	10.69	3.36	13.31	10.48	3.39	12.85	10.27	3.47	12.38	10.03	3.57	11.92	9.76	3.81	11.36	9.39	4.14
1060	16°C	21°C	11.48	6.87	3.28	11.06	6.69	3.29	10.63	6.51	3.35	10.19	6.32	3.44	9.74	6.13	3.66	9.17	5.88	3.97
		24°C	11.53	8.34	3.28	11.10	8.15	3.29	10.68	7.96	3.35	10.24	7.76	3.44	9.79	7.55	3.66	9.23	7.28	3.97
		27°C	11.66	9.63	3.28	11.28	9.39	3.30	10.90	9.13	3.37	10.51	8.85	3.46	10.12	8.53	3.69	9.64	8.13	4.00
		30°C	12.26	10.33	3.31	11.90	10.03	3.32	11.54	9.72	3.40	11.16	9.40	3.50	10.76	9.07	3.73	10.27	8.65	4.05
	19°C	24°C	12.63	6.84	3.32	12.17	6.67	3.34	11.71	6.49	3.41	11.24	6.31	3.50	10.74	6.12	3.73	10.13	5.89	4.04
		27°C	12.67	8.35	3.32	12.21	8.16	3.34	11.75	7.97	3.41	11.28	7.78	3.51	10.78	7.58	3.73	10.17	7.34	4.04
		30°C	12.73	9.76	3.32	12.27	9.56	3.34	11.83	9.35	3.41	11.37	9.13	3.51	10.90	8.89	3.74	10.33	8.57	4.06
		33°C	12.99	10.88	3.33	12.59	10.60	3.36	12.21	10.29	3.43	11.82	9.96	3.54	11.42	9.62	3.77	10.91	9.19	4.10
	22°C	27°C	13.86	6.78	3.37	13.37	6.61	3.39	12.87	6.44	3.47	12.35	6.26	3.57	11.82	6.08	3.80	11.16	5.86	4.12
		30°C	13.90	8.31	3.37	13.40	8.13	3.39	12.90	7.94	3.47	12.38	7.76	3.57	11.85	7.57	3.80	11.19	7.33	4.12
		33°C	13.94	9.75	3.37	13.44	9.56	3.40	12.94	9.37	3.47	12.42	9.18	3.58	11.90	8.98	3.81	11.25	8.72	4.13
		36°C	14.03	11.09	3.38	13.55	10.87	3.40	13.08	10.64	3.48	12.60	10.39	3.59	12.13	10.10	3.82	11.56	9.71	4.16
1100	16°C	21°C	11.61	7.04	3.28	11.19	6.85	3.29	10.76	6.67	3.36	10.31	6.47	3.45	9.85	6.27	3.67	9.28	6.02	3.98
		24°C	11.66	8.54	3.29	11.23	8.34	3.30	10.80	8.15	3.36	10.36	7.94	3.45	9.91	7.73	3.67	9.34	7.45	3.98
		27°C	11.80	9.87	3.29	11.41	9.62	3.30	11.03	9.35	3.37	10.63	9.06	3.47	10.24	8.73	3.69	9.76	8.31	4.01
		30°C	12.41	10.58	3.31	12.04	10.27	3.33	11.67	9.96	3.41	11.29	9.62	3.51	10.89	9.28	3.74	10.39	8.85	4.06
	19°C	24°C	12.78	7.01	3.33	12.32	6.83	3.34	11.85	6.65	3.41	11.37	6.46	3.51	10.87	6.27	3.73	10.25	6.03	4.05
		27°C	12.82	8.55	3.33	12.36	8.36	3.35	11.89	8.16	3.42	11.41	7.96	3.51	10.91	7.76	3.74	10.29	7.51	4.05
		30°C	12.88	10.00	3.33	12.41	9.79	3.35	11.96	9.58	3.42	11.51	9.34	3.52	11.03	9.09	3.75	10.46	8.76	4.07
		33°C	13.14	11.15	3.34	12.74	10.86	3.36	12.36	10.54	3.44	11.96	10.20	3.55	11.55	9.84	3.78	11.03	9.40	4.11
	22°C	27°C	14.03	6.94	3.38	13.52	6.77	3.40	13.02	6.59	3.48	12.50	6.41	3.58	11.96	6.23	3.81	11.29	5.99	4.13
		30°C	14.06	8.52	3.38	13.56	8.33	3.40	13.05	8.14	3.48	12.53	7.94	3.58	11.99	7.74	3.81	11.32	7.50	4.13
		33°C	14.10	9.99	3.38	13.60	9.79	3.40	13.09	9.60	3.48	12.57	9.40	3.58	12.04	9.19	3.82	11.38	8.92	4.14
		36°C	14.19	11.37	3.38	13.71	11.14	3.41	13.23	10.90	3.49	12.75	10.64	3.60	12.27	10.34	3.83	11.70	9.94	4.17

Remark:
AFR: Air flow rate (CFM)
EWB: Entering Wet Bulb Temp. (˚C)
EDB: Entering Dry Bulb Temp. (˚C)
TC: Total Cooling Capacity (kW)
SHC: Sensible Heat Capacity (kW)
PI: Power Input

Notes:
1. Ratings shown are gross capacities which do not include a deduction for indoor fan motor heat.
2. shows nominal capacities.
3. Direct interpolation is permissible. Do not extrapolate.

Heating Mode

ID DB°C	Outdoor WB°C													
	-9		-6		-5		6		12		15		18	
	TC(kW)	SC(kW)	TC(kW)	SC(kW)	TC(kW)	SC(kW)	TC(kW)	SC(kW)	TC(kW)	SC(kW)	TC(kW)	SC(kW)	TC(kW)	SC(kW)
15	6.607	6.607	7.814	7.814	8.216	8.216	12.639	12.639	15.052	15.052	16.258	16.258	17.464	17.464
17	6.554	6.554	7.691	7.691	8.069	8.069	12.334	12.334	14.647	14.647	15.807	15.807	16.968	16.968
19	6.501	6.501	7.567	7.567	7.923	7.923	12.029	12.029	14.241	14.241	15.356	15.356	16.471	16.471
21	6.448	6.448	7.444	7.444	7.776	7.776	11.723	11.723	13.836	13.836	14.906	14.906	15.975	15.975
23	6.328	6.328	7.305	7.305	7.630	7.630	11.400	11.400	13.431	13.431	14.455	14.455	15.479	15.479
25	6.209	6.209	7.165	7.165	7.484	7.484	11.078	11.078	13.026	13.026	14.004	14.004	14.982	14.982
27	6.089	6.089	7.025	7.025	7.337	7.337	10.755	10.755	12.621	12.621	13.553	13.553	14.486	14.486
	FROST REGION													

Model: ACC50CR - ALC~~50CR~~ 50DR

Cooling Mode

AFR (CFM)	EWB	EDB	Outdoor temperature																	
			19°C			25°C			30°C			35°C			40°C			46°C		
			TC	SHC	PI	TC	SHC	PI	TC	SHC	PI	TC	SHC	PI	TC	SHC	PI	TC	SHC	PI
1210	16°C	21°C	13.41	8.34	4.61	12.93	8.12	4.62	12.44	7.91	4.71	11.93	7.70	4.84	11.39	7.47	5.15	10.73	7.18	5.59
		24°C	13.47	10.12	4.61	12.98	9.90	4.63	12.49	9.68	4.72	11.98	9.44	4.85	11.46	9.20	5.15	10.80	8.89	5.59
		27°C	13.63	11.69	4.62	13.19	11.41	4.64	12.75	11.10	4.73	12.30	10.77	4.87	11.84	10.40	5.18	11.28	9.92	5.63
		30°C	14.33	12.54	4.65	13.92	12.18	4.68	13.49	11.82	4.78	13.06	11.44	4.92	12.59	11.05	5.25	12.02	10.56	5.70
	19°C	24°C	14.76	8.31	4.67	14.23	8.10	4.69	13.70	7.89	4.79	13.15	7.68	4.93	12.57	7.46	5.24	11.85	7.19	5.69
		27°C	14.81	10.13	4.67	14.28	9.91	4.69	13.75	9.69	4.80	13.19	9.47	4.93	12.61	9.24	5.25	11.90	8.96	5.69
		30°C	14.88	11.85	4.68	14.35	11.61	4.70	13.83	11.37	4.80	13.30	11.11	4.94	12.76	10.83	5.26	12.09	10.45	5.71
		33°C	15.18	13.21	4.69	14.73	12.87	4.72	14.29	12.51	4.83	13.83	12.12	4.98	13.36	11.72	5.31	12.76	11.21	5.77
	22°C	27°C	16.20	8.23	4.74	15.63	8.03	4.77	15.05	7.83	4.88	14.45	7.62	5.02	13.83	7.41	5.35	13.06	7.15	5.80
		30°C	16.24	10.09	4.74	15.67	9.87	4.77	15.09	9.66	4.88	14.49	9.44	5.03	13.87	9.22	5.35	13.10	8.95	5.80
		33°C	16.29	11.83	4.74	15.71	11.61	4.78	15.13	11.40	4.89	14.53	11.18	5.03	13.92	10.94	5.35	13.16	10.64	5.81
		36°C	16.40	13.47	4.75	15.84	13.21	4.78	15.29	12.94	4.90	14.74	12.65	5.05	14.19	12.31	5.38	13.53	11.86	5.85
1280	16°C	21°C	13.76	8.78	4.63	13.26	8.56	4.65	12.75	8.33	4.74	12.23	8.10	4.87	11.68	7.85	5.18	11.00	7.54	5.61
		24°C	13.82	10.66	4.64	13.31	10.42	4.65	12.81	10.19	4.74	12.28	9.94	4.87	11.74	9.68	5.18	11.07	9.34	5.62
		27°C	13.99	12.32	4.64	13.53	12.01	4.66	13.07	11.69	4.76	12.61	11.33	4.89	12.14	10.93	5.21	11.57	10.42	5.66
		30°C	14.70	13.21	4.68	14.27	12.83	4.70	13.84	12.44	4.80	13.39	12.04	4.95	12.91	11.62	5.27	12.32	11.09	5.73
	19°C	24°C	15.15	8.75	4.69	14.60	8.53	4.72	14.05	8.31	4.82	13.48	8.08	4.95	12.89	7.85	5.27	12.15	7.56	5.71
		27°C	15.20	10.68	4.70	14.65	10.44	4.72	14.09	10.21	4.82	13.53	9.96	4.96	12.93	9.72	5.27	12.20	9.41	5.72
		30°C	15.26	12.48	4.70	14.72	12.23	4.72	14.18	11.97	4.83	13.64	11.69	4.96	13.08	11.39	5.28	12.40	10.98	5.74
		33°C	15.57	13.92	4.71	15.11	13.56	4.74	14.65	13.17	4.86	14.18	12.75	5.00	13.69	12.32	5.34	13.08	11.78	5.80
	22°C	27°C	16.62	8.67	4.76	16.03	8.46	4.80	15.43	8.24	4.91	14.82	8.02	5.05	14.18	7.79	5.37	13.39	7.52	5.83
		30°C	16.67	10.63	4.77	16.07	10.40	4.80	15.47	10.17	4.91	14.85	9.93	5.05	14.21	9.69	5.38	13.43	9.40	5.83
		33°C	16.71	12.47	4.77	16.12	12.23	4.80	15.51	12.00	4.91	14.90	11.76	5.06	14.27	11.51	5.38	13.49	11.18	5.84
		36°C	16.82	14.19	4.77	16.25	13.91	4.81	15.68	13.62	4.92	15.12	13.30	5.07	14.55	12.94	5.41	13.87	12.46	5.88
1380	16°C	21°C	14.01	9.11	4.65	13.50	8.87	4.66	12.98	8.64	4.76	12.44	8.39	4.88	11.89	8.13	5.19	11.19	7.81	5.63
		24°C	14.07	11.06	4.65	13.55	10.81	4.67	13.03	10.56	4.76	12.50	10.30	4.89	11.95	10.02	5.20	11.27	9.67	5.64
		27°C	14.24	12.78	4.66	13.77	12.46	4.68	13.30	12.11	4.78	12.83	11.74	4.91	12.36	11.32	5.23	11.77	10.78	5.68
		30°C	14.97	13.70	4.69	14.53	13.30	4.72	14.08	12.90	4.82	13.62	12.48	4.96	13.14	12.04	5.29	12.54	11.48	5.75
	19°C	24°C	15.42	9.08	4.71	14.86	8.85	4.73	14.30	8.61	4.84	13.72	8.37	4.97	13.12	8.13	5.29	12.37	7.82	5.73
		27°C	15.47	11.08	4.71	14.91	10.83	4.74	14.35	10.58	4.84	13.77	10.32	4.97	13.16	10.06	5.29	12.41	9.74	5.74
		30°C	15.54	12.95	4.72	14.98	12.68	4.74	14.44	12.41	4.84	13.88	12.11	4.98	13.31	11.79	5.30	12.62	11.37	5.76
		33°C	15.85	14.44	4.73	15.37	14.06	4.76	14.91	13.65	4.87	14.43	13.22	5.02	13.94	12.76	5.36	13.31	12.19	5.82
	22°C	27°C	16.92	8.99	4.78	16.32	8.77	4.81	15.71	8.54	4.92	15.08	8.31	5.07	14.43	8.07	5.39	13.62	7.78	5.85
		30°C	16.97	11.03	4.78	16.36	10.78	4.82	15.75	10.54	4.93	15.12	10.29	5.07	14.47	10.04	5.40	13.66	9.73	5.85
		33°C	17.01	12.93	4.79	16.40	12.69	4.82	15.79	12.44	4.93	15.16	12.18	5.07	14.52	11.92	5.40	13.73	11.57	5.86
		36°C	17.13	14.72	4.79	16.54	14.42	4.83	15.96	14.12	4.94	15.39	13.79	5.09	14.81	13.40	5.43	14.12	12.89	5.90
1590	16°C	21°C	14.18	9.34	4.66	13.66	9.09	4.67	13.13	8.84	4.77	12.59	8.59	4.90	12.03	8.32	5.21	11.33	7.98	5.65
		24°C	14.24	11.34	4.66	13.71	11.07	4.68	13.19	10.81	4.77	12.65	10.54	4.90	12.09	10.26	5.21	11.40	9.89	5.65
		27°C	14.40	13.10	4.67	13.93	12.76	4.69	13.46	12.41	4.79	12.98	12.02	4.92	12.50	11.58	5.24	11.91	11.03	5.70
		30°C	15.14	14.04	4.70	14.70	13.63	4.73	14.25	13.21	4.83	13.78	12.77	4.98	13.29	12.32	5.30	12.68	11.74	5.76
	19°C	24°C	15.60	9.30	4.72	15.03	9.06	4.74	14.46	8.82	4.85	13.88	8.57	4.98	13.27	8.32	5.30	12.51	8.00	5.75
		27°C	15.65	11.35	4.72	15.08	11.09	4.75	14.51	10.83	4.85	13.93	10.57	4.99	13.32	10.30	5.30	12.56	9.96	5.75
		30°C	15.72	13.27	4.73	15.15	12.99	4.75	14.61	12.71	4.85	14.05	12.40	4.99	13.47	12.07	5.31	12.77	11.62	5.77
		33°C	16.04	14.80	4.74	15.56	14.41	4.77	15.08	13.98	4.89	14.60	13.53	5.03	14.10	13.06	5.37	13.47	12.47	5.83
	22°C	27°C	17.12	9.21	4.79	16.51	8.98	4.82	15.89	8.75	4.94	15.26	8.51	5.08	14.60	8.26	5.41	13.78	7.95	5.86
		30°C	17.17	11.30	4.79	16.55	11.05	4.83	15.93	10.80	4.94	15.30	10.54	5.08	14.64	10.27	5.41	13.82	9.95	5.87
		33°C	17.21	13.25	4.80	16.60	12.99	4.83	15.97	12.74	4.94	15.34	12.47	5.09	14.69	12.20	5.41	13.89	11.84	5.87
		36°C	17.33	15.08	4.80	16.73	14.78	4.84	16.15	14.46	4.95	15.57	14.11	5.10	14.98	13.72	5.44	14.28	13.18	5.91

Remark:
AFR: Air flow rate (CFM)
EWB: Entering Wet Bulb Temp. (˚C)
EDB: Entering Dry Bulb Temp. (˚C)

TC: Total Cooling Capacity (kW)
SHC: Sensible Heat Capacity (kW)
PI: Power Input

Notes:
1. Ratings shown are gross capacities which do not include a deduction for indoor fan motor heat.
2. shows nominal capacities.
3. Direct interpolation is permissible. Do not extrapolate.

Heating Mode

ID DB°C	Outdoor WB°C													
	-9		-6		-5		6		12		15		18	
	TC(kW)	SC(kW)	TC(kW)	SC(kW)	TC(kW)	SC(kW)	TC(kW)	SC(kW)	TC(kW)	SC(kW)	TC(kW)	SC(kW)	TC(kW)	SC(kW)
15	8.814	8.814	10.164	10.164	10.614	10.614	15.565	15.565	18.266	18.266	19.617	19.617	20.967	20.967
17	8.807	8.807	10.025	10.025	10.431	10.431	15.555	15.555	17.778	17.778	19.075	19.075	20.371	20.371
19	8.799	8.799	9.886	9.886	10.248	10.248	15.544	15.544	17.290	17.290	18.533	18.533	19.775	19.775
21	8.792	8.792	9.747	9.747	10.065	10.065	15.533	15.533	16.802	16.802	17.991	17.991	19.180	19.180
23	8.572	8.572	9.555	9.555	9.883	9.883	14.764	14.764	16.314	16.314	17.449	17.449	18.584	18.584
25	8.351	8.351	9.363	9.363	9.700	9.700	13.994	13.994	15.826	15.826	16.907	16.907	17.988	17.988
27	8.131	8.131	9.170	9.170	9.517	9.517	13.225	13.225	15.338	15.338	16.365	16.365	17.392	17.392
	FROST REGION													

Model: ACC60CR - ALC~~61CR~~ 61DR

Cooling Mode

AFR (CFM)	EWB	EDB	Outdoor temperature																	
			19°C			25°C			30°C			35°C			40°C			46°C		
			TC	SHC	PI	TC	SHC	PI	TC	SHC	PI	TC	SHC	PI	TC	SHC	PI	TC	SHC	PI
1290	16°C	21°C	15.99	9.94	5.57	15.41	9.69	5.58	14.83	9.43	5.69	14.22	9.17	5.85	13.58	8.90	6.22	12.79	8.56	6.74
		24°C	16.06	12.07	5.57	15.47	11.80	5.59	14.89	11.54	5.70	14.28	11.26	5.85	13.66	10.97	6.22	12.88	10.60	6.75
		27°C	16.25	13.94	5.58	15.72	13.60	5.60	15.20	13.23	5.72	14.66	12.84	5.88	14.12	12.39	6.26	13.45	11.82	6.80
		30°C	17.08	14.95	5.62	16.59	14.52	5.65	16.09	14.09	5.77	15.56	13.64	5.94	15.01	13.18	6.33	14.32	12.59	6.88
	19°C	24°C	17.60	9.90	5.64	16.97	9.66	5.67	16.33	9.41	5.79	15.67	9.16	5.95	14.99	8.90	6.33	14.13	8.58	6.86
		27°C	17.66	12.08	5.64	17.02	11.82	5.67	16.39	11.56	5.79	15.73	11.29	5.95	15.04	11.02	6.33	14.18	10.68	6.87
		30°C	17.73	14.13	5.65	17.10	13.84	5.67	16.49	13.56	5.80	15.86	13.24	5.96	15.21	12.91	6.35	14.42	12.46	6.89
		33°C	18.09	15.75	5.66	17.56	15.35	5.70	17.03	14.92	5.83	16.49	14.45	6.01	15.92	13.97	6.41	15.21	13.37	6.97
	22°C	27°C	19.32	9.81	5.72	18.63	9.57	5.76	17.94	9.33	5.89	17.23	9.09	6.06	16.49	8.84	6.46	15.57	8.53	7.00
		30°C	19.36	12.03	5.73	18.68	11.77	5.76	17.98	11.52	5.90	17.27	11.26	6.07	16.53	10.99	6.46	15.61	10.66	7.01
		33°C	19.42	14.11	5.73	18.73	13.85	5.77	18.04	13.59	5.90	17.32	13.32	6.07	16.59	13.05	6.47	15.69	12.69	7.01
		36°C	19.55	16.05	5.73	18.88	15.74	5.78	18.23	15.43	5.91	17.58	15.08	6.09	16.92	14.68	6.49	16.13	14.13	7.06
1430	16°C	21°C	16.41	10.47	5.60	15.81	10.20	5.61	15.20	9.93	5.72	14.58	9.65	5.88	13.93	9.36	6.25	13.11	8.99	6.78
		24°C	16.48	12.71	5.60	15.87	12.43	5.61	15.27	12.14	5.73	14.64	11.85	5.88	14.00	11.54	6.26	13.20	11.13	6.79
		27°C	16.67	14.69	5.61	16.13	14.32	5.63	15.58	13.93	5.75	15.03	13.51	5.91	14.48	13.03	6.29	13.79	12.42	6.84
		30°C	17.53	15.75	5.65	17.02	15.29	5.67	16.50	14.83	5.80	15.96	14.35	5.97	15.39	13.86	6.37	14.69	13.23	6.92
	19°C	24°C	18.06	10.43	5.67	17.41	10.17	5.69	16.75	9.91	5.82	16.07	9.63	5.98	15.36	9.36	6.36	14.49	9.01	6.90
		27°C	18.12	12.73	5.67	17.46	12.44	5.70	16.80	12.17	5.82	16.12	11.88	5.98	15.42	11.58	6.37	14.54	11.22	6.91
		30°C	18.20	14.88	5.68	17.54	14.58	5.70	16.91	14.27	5.83	16.26	13.93	5.99	15.59	13.57	6.38	14.78	13.09	6.93
		33°C	18.57	16.60	5.69	18.01	16.17	5.73	17.46	15.70	5.86	16.91	15.20	6.04	16.32	14.69	6.44	15.60	14.05	7.01
	22°C	27°C	19.82	10.33	5.75	19.11	10.08	5.79	18.40	9.83	5.92	17.66	9.56	6.10	16.90	9.29	6.49	15.96	8.96	7.04
		30°C	19.87	12.67	5.75	19.16	12.40	5.79	18.44	12.12	5.93	17.71	11.84	6.10	16.95	11.56	6.49	16.01	11.20	7.04
		33°C	19.93	14.86	5.76	19.21	14.58	5.80	18.49	14.31	5.93	17.76	14.02	6.11	17.01	13.72	6.50	16.08	13.33	7.05
		36°C	20.06	16.91	5.76	19.37	16.58	5.81	18.70	16.24	5.94	18.02	15.86	6.12	17.35	15.43	6.53	16.54	14.85	7.10
1530	16°C	21°C	16.70	10.86	5.62	16.09	10.58	5.63	15.47	10.30	5.74	14.83	10.00	5.90	14.17	9.70	6.27	13.34	9.31	6.80
		24°C	16.78	13.19	5.62	16.15	12.89	5.64	15.54	12.59	5.75	14.90	12.27	5.90	14.25	11.95	6.28	13.43	11.52	6.81
		27°C	16.97	15.24	5.63	16.41	14.85	5.65	15.86	14.44	5.77	15.30	14.00	5.93	14.73	13.50	6.32	14.03	12.85	6.86
		30°C	17.84	16.34	5.67	17.32	15.86	5.70	16.79	15.38	5.82	16.24	14.87	5.99	15.67	14.35	6.39	14.94	13.69	6.94
	19°C	24°C	18.38	10.82	5.69	17.72	10.55	5.72	17.05	10.27	5.84	16.35	9.98	6.00	15.64	9.69	6.39	14.74	9.32	6.92
		27°C	18.44	13.20	5.69	17.77	12.91	5.72	17.10	12.61	5.84	16.41	12.31	6.01	15.69	11.99	6.39	14.80	11.61	6.93
		30°C	18.53	15.44	5.70	17.86	15.12	5.72	17.21	14.79	5.85	16.55	14.44	6.01	15.87	14.06	6.40	15.04	13.55	6.95
		33°C	18.90	17.22	5.71	18.33	16.76	5.75	17.77	16.28	5.89	17.21	15.76	6.06	16.61	15.21	6.47	15.87	14.54	7.03
	22°C	27°C	20.18	10.72	5.77	19.45	10.46	5.81	18.73	10.19	5.95	17.98	9.91	6.12	17.20	9.62	6.51	16.24	9.27	7.06
		30°C	20.23	13.15	5.78	19.50	12.86	5.82	18.77	12.57	5.95	18.02	12.27	6.12	17.25	11.97	6.52	16.29	11.59	7.07
		33°C	20.28	15.42	5.78	19.56	15.12	5.82	18.83	14.83	5.95	18.07	14.53	6.13	17.31	14.21	6.52	16.37	13.80	7.08
		36°C	20.42	17.55	5.78	19.71	17.20	5.83	19.03	16.83	5.97	18.34	16.44	6.15	17.66	15.98	6.55	16.83	15.37	7.12
1650	16°C	21°C	16.90	11.13	5.63	16.28	10.84	5.64	15.66	10.54	5.76	15.01	10.24	5.91	14.34	9.92	6.29	13.50	9.52	6.82
		24°C	16.97	13.52	5.63	16.34	13.20	5.65	15.72	12.89	5.76	15.08	12.56	5.92	14.42	12.23	6.29	13.59	11.79	6.82
		27°C	17.17	15.61	5.64	16.61	15.21	5.66	16.05	14.79	5.78	15.48	14.33	5.94	14.91	13.81	6.33	14.20	13.15	6.88
		30°C	18.05	16.74	5.68	17.52	16.25	5.71	16.99	15.75	5.84	16.43	15.22	6.01	15.85	14.68	6.40	15.12	14.00	6.96
	19°C	24°C	18.60	11.09	5.70	17.92	10.80	5.73	17.24	10.52	5.85	16.55	10.22	6.01	15.82	9.91	6.40	14.92	9.54	6.94
		27°C	18.66	13.53	5.70	17.98	13.22	5.73	17.30	12.92	5.86	16.60	12.60	6.02	15.87	12.28	6.40	14.97	11.87	6.95
		30°C	18.74	15.82	5.71	18.07	15.49	5.74	17.41	15.15	5.86	16.74	14.78	6.03	16.05	14.39	6.42	15.22	13.86	6.97
		33°C	19.12	17.64	5.73	18.54	17.17	5.76	17.98	16.67	5.90	17.41	16.13	6.08	16.81	15.57	6.48	16.06	14.87	7.05
	22°C	27°C	20.41	10.98	5.79	19.68	10.71	5.83	18.94	10.43	5.96	18.19	10.14	6.13	17.40	9.85	6.53	16.43	9.48	7.08
		30°C	20.46	13.47	5.79	19.73	13.17	5.83	18.99	12.87	5.96	18.23	12.56	6.14	17.45	12.25	6.53	16.48	11.86	7.08
		33°C	20.52	15.80	5.79	19.79	15.49	5.83	19.04	15.19	5.97	18.29	14.87	6.14	17.52	14.54	6.54	16.56	14.11	7.09
		36°C	20.66	17.98	5.80	19.95	17.61	5.84	19.25	17.24	5.98	18.56	16.82	6.16	17.86	16.35	6.57	17.03	15.72	7.14

Remark:
AFR: Air flow rate (CFM)
EWB: Entering Wet Bulb Temp. (˚C)
EDB: Entering Dry Bulb Temp. (˚C)

TC: Total Cooling Capacity (kW)
SHC: Sensible Heat Capacity (kW)
PI: Power Input

Notes:
1. Ratings shown are gross capacities which do not include a deduction for indoor fan motor heat.
2. shows nominal capacities.
3. Direct interpolation is permissible. Do not extrapolate.

Heating Mode

ID DB°C	Outdoor WB°C													
	-9		-6		-5		6		12		15		18	
	TC(kW)	SC(kW)	TC(kW)	SC(kW)	TC(kW)	SC(kW)	TC(kW)	SC(kW)	TC(kW)	SC(kW)	TC(kW)	SC(kW)	TC(kW)	SC(kW)
15	9.190	9.190	10.827	10.827	11.373	11.373	17.377	17.377	20.653	20.653	22.290	22.290	23.928	23.928
17	9.126	9.126	10.660	10.660	11.171	11.171	17.056	17.056	20.097	20.097	21.672	21.672	23.248	23.248
19	9.062	9.062	10.493	10.493	10.970	10.970	16.734	16.734	19.542	19.542	21.055	21.055	22.567	22.567
21	8.998	8.998	10.325	10.325	10.768	10.768	16.413	16.413	18.987	18.987	20.437	20.437	21.887	21.887
23	8.822	8.822	10.130	10.130	10.566	10.566	15.867	15.867	18.431	18.431	19.819	19.819	21.207	21.207
25	8.646	8.646	9.935	9.935	10.364	10.364	15.322	15.322	17.876	17.876	19.202	19.202	20.527	20.527
27	8.470	8.470	9.740	9.740	10.163	10.163	14.777	14.777	17.321	17.321	18.584	18.584	19.847	19.847
	FROST REGION													

Cooling Only (R410A)

Model: A5CC10C - A5LC10C
Cooling Mode

AFR (CFM)	EWB	EDB	Outdoor temperature																	
			19°C			25°C			30°C			35°C			40°C			46°C		
			TC	SHC	PI	TC	SHC	PI	TC	SHC	PI	TC	SHC	PI	TC	SHC	PI	TC	SHC	PI
210	16°C	21°C	2.62	1.83	0.73	2.53	1.78	0.79	2.44	1.74	0.86	2.34	1.69	0.93	2.15	1.57	1.01	1.98	1.48	1.11
		24°C	2.63	2.19	0.73	2.53	2.14	0.79	2.44	2.09	0.86	2.34	2.04	0.93	2.15	1.91	1.01	1.99	1.80	1.11
		27°C	2.65	2.49	0.73	2.56	2.43	0.79	2.47	2.37	0.86	2.38	2.31	0.93	2.19	2.15	1.01	2.04	2.02	1.11
		30°C	2.73	2.73	0.73	2.65	2.65	0.80	2.57	2.57	0.86	2.49	2.49	0.94	2.30	2.30	1.02	2.16	2.16	1.12
	19°C	24°C	2.89	1.71	0.74	2.79	1.67	0.80	2.69	1.62	0.87	2.58	1.58	0.94	2.37	1.47	1.02	2.19	1.38	1.13
		27°C	2.89	1.96	0.74	2.79	1.91	0.80	2.69	1.87	0.87	2.58	1.82	0.94	2.37	1.70	1.02	2.20	1.62	1.13
		30°C	2.90	2.41	0.74	2.80	2.36	0.80	2.70	2.31	0.87	2.60	2.25	0.94	2.39	2.11	1.03	2.22	1.99	1.13
		33°C	2.93	2.93	0.74	2.84	2.84	0.81	2.75	2.75	0.87	2.65	2.65	0.95	2.45	2.45	1.03	2.29	2.29	1.14
	22°C	27°C	3.18	1.67	0.76	3.07	1.63	0.82	2.96	1.59	0.89	2.84	1.55	0.96	2.62	1.44	1.04	2.42	1.36	1.15
		30°C	3.18	2.04	0.76	3.07	2.00	0.82	2.96	1.95	0.89	2.84	1.90	0.96	2.62	1.78	1.04	2.42	1.69	1.15
		33°C	3.18	2.38	0.76	3.07	2.34	0.82	2.96	2.29	0.89	2.85	2.24	0.96	2.62	2.10	1.04	2.43	2.00	1.15
		36°C	3.19	2.70	0.76	3.09	2.65	0.82	2.98	2.59	0.89	2.87	2.53	0.96	2.65	2.38	1.05	2.46	2.25	1.15
235	16°C	21°C	2.73	1.91	0.74	2.63	1.86	0.80	2.53	1.81	0.86	2.43	1.76	0.94	2.23	1.64	1.01	2.05	1.54	1.12
		24°C	2.74	2.32	0.74	2.64	2.26	0.80	2.54	2.21	0.86	2.44	2.15	0.94	2.24	2.01	1.02	2.07	1.90	1.12
		27°C	2.77	2.63	0.74	2.68	2.57	0.80	2.58	2.50	0.87	2.49	2.43	0.94	2.30	2.26	1.02	2.14	2.11	1.13
		30°C	2.88	2.88	0.74	2.80	2.80	0.81	2.72	2.72	0.87	2.63	2.63	0.95	2.43	2.43	1.03	2.28	2.28	1.14
	19°C	24°C	3.00	1.81	0.75	2.90	1.76	0.81	2.79	1.71	0.88	2.68	1.67	0.95	2.46	1.55	1.03	2.27	1.46	1.14
		27°C	3.01	2.08	0.75	2.90	2.03	0.81	2.79	1.99	0.88	2.68	1.94	0.95	2.46	1.81	1.03	2.28	1.72	1.14
		30°C	3.02	2.57	0.75	2.92	2.51	0.81	2.81	2.45	0.88	2.71	2.39	0.95	2.49	2.24	1.04	2.31	2.11	1.14
		33°C	3.07	3.07	0.75	2.98	2.98	0.82	2.89	2.89	0.88	2.79	2.79	0.96	2.58	2.58	1.04	2.42	2.42	1.15
	22°C	27°C	3.30	1.77	0.76	3.19	1.73	0.83	3.07	1.68	0.90	2.95	1.64	0.97	2.71	1.53	1.05	2.50	1.44	1.16
		30°C	3.31	2.17	0.76	3.19	2.12	0.83	3.07	2.08	0.90	2.95	2.03	0.97	2.71	1.90	1.05	2.51	1.80	1.16
		33°C	3.31	2.54	0.76	3.20	2.49	0.83	3.08	2.44	0.90	2.96	2.39	0.97	2.72	2.24	1.05	2.52	2.13	1.16
		36°C	3.33	2.87	0.76	3.22	2.82	0.83	3.11	2.76	0.90	3.00	2.70	0.98	2.77	2.52	1.06	2.58	2.38	1.17
250	16°C	21°C	2.83	1.99	0.74	2.72	1.94	0.80	2.62	1.89	0.87	2.51	1.84	0.94	2.30	1.71	1.02	2.12	1.61	1.13
		24°C	2.84	2.42	0.74	2.74	2.36	0.80	2.64	2.30	0.87	2.53	2.24	0.94	2.32	2.09	1.02	2.15	1.97	1.13
		27°C	2.89	2.77	0.75	2.79	2.70	0.81	2.70	2.63	0.87	2.60	2.54	0.95	2.41	2.36	1.03	2.24	2.20	1.14
		30°C	3.03	3.03	0.75	2.94	2.94	0.81	2.85	2.85	0.88	2.76	2.76	0.96	2.56	2.56	1.04	2.39	2.39	1.15
	19°C	24°C	3.11	1.91	0.76	3.00	1.86	0.82	2.89	1.82	0.89	2.77	1.77	0.96	2.54	1.65	1.04	2.35	1.55	1.15
		27°C	3.12	2.21	0.76	3.01	2.16	0.82	2.90	2.11	0.89	2.78	2.06	0.96	2.55	1.92	1.04	2.36	1.82	1.15
		30°C	3.15	2.72	0.76	3.04	2.66	0.82	2.93	2.60	0.89	2.82	2.53	0.96	2.59	2.37	1.05	2.41	2.23	1.15
		33°C	3.22	3.22	0.76	3.12	3.12	0.82	3.03	3.03	0.89	2.93	2.93	0.97	2.71	2.71	1.06	2.54	2.54	1.16
	22°C	27°C	3.42	1.87	0.77	3.29	1.83	0.83	3.17	1.78	0.90	3.04	1.73	0.98	2.80	1.62	1.06	2.58	1.53	1.17
		30°C	3.42	2.30	0.77	3.30	2.26	0.83	3.18	2.21	0.90	3.05	2.16	0.98	2.80	2.02	1.06	2.59	1.92	1.17
		33°C	3.43	2.70	0.77	3.32	2.65	0.83	3.19	2.60	0.91	3.07	2.54	0.98	2.82	2.38	1.06	2.62	2.26	1.17
		36°C	3.47	3.05	0.77	3.36	2.99	0.84	3.24	2.93	0.91	3.12	2.85	0.99	2.89	2.66	1.07	2.69	2.51	1.18

Model: A5CC15C - A5LC15C
Cooling Mode

AFR (CFM)	EWB	EDB	Outdoor temperature																	
			19°C			25°C			30°C			35°C			40°C			46°C		
			TC	SHC	PI	TC	SHC	PI	TC	SHC	PI	TC	SHC	PI	TC	SHC	PI	TC	SHC	PI
250	16°C	21°C	3.45	2.37	0.99	3.33	2.31	1.07	3.20	2.25	1.15	3.08	2.19	1.25	2.82	2.03	1.36	2.61	1.91	1.50
		24°C	3.45	2.84	0.99	3.33	2.78	1.07	3.21	2.71	1.15	3.08	2.65	1.25	2.83	2.47	1.36	2.62	2.33	1.50
		27°C	3.48	3.22	0.99	3.37	3.15	1.07	3.25	3.08	1.16	3.12	3.00	1.25	2.88	2.79	1.36	2.68	2.62	1.50
		30°C	3.59	3.59	0.99	3.49	3.49	1.07	3.38	3.38	1.16	3.27	3.27	1.26	3.03	3.03	1.37	2.84	2.84	1.52
	19°C	24°C	3.80	2.22	1.00	3.67	2.16	1.08	3.54	2.10	1.17	3.40	2.04	1.27	3.12	1.90	1.38	2.89	1.79	1.52
		27°C	3.81	2.54	1.00	3.67	2.48	1.08	3.54	2.42	1.17	3.40	2.36	1.27	3.12	2.21	1.38	2.89	2.09	1.52
		30°C	3.81	3.13	1.00	3.68	3.06	1.08	3.55	3.00	1.18	3.42	2.92	1.27	3.15	2.73	1.38	2.92	2.59	1.53
		33°C	3.86	3.86	1.00	3.73	3.73	1.09	3.61	3.61	1.18	3.49	3.49	1.28	3.23	3.23	1.39	3.02	3.02	1.53
	22°C	27°C	4.19	2.17	1.02	4.04	2.12	1.10	3.89	2.06	1.20	3.74	2.01	1.30	3.44	1.87	1.41	3.18	1.76	1.55
		30°C	4.19	2.64	1.02	4.04	2.59	1.10	3.89	2.53	1.20	3.74	2.47	1.30	3.44	2.31	1.41	3.19	2.19	1.55
		33°C	4.19	3.09	1.02	4.04	3.03	1.10	3.90	2.97	1.20	3.74	2.91	1.30	3.45	2.73	1.41	3.19	2.59	1.55
		36°C	4.20	3.50	1.02	4.06	3.43	1.11	3.92	3.36	1.20	3.78	3.29	1.30	3.49	3.08	1.41	3.24	2.92	1.56
370	16°C	21°C	3.59	2.48	0.99	3.46	2.41	1.08	3.33	2.35	1.16	3.19	2.28	1.26	2.93	2.13	1.37	2.70	2.00	1.51
		24°C	3.60	3.01	0.99	3.47	2.94	1.08	3.34	2.87	1.17	3.21	2.80	1.26	2.95	2.61	1.37	2.72	2.46	1.51
		27°C	3.64	3.42	1.00	3.52	3.34	1.08	3.40	3.25	1.17	3.28	3.16	1.27	3.03	2.93	1.38	2.82	2.74	1.52
		30°C	3.80	3.80	1.00	3.69	3.69	1.09	3.57	3.57	1.18	3.46	3.46	1.28	3.20	3.20	1.39	3.00	3.00	1.54
	19°C	24°C	3.96	2.35	1.01	3.81	2.29	1.09	3.67	2.23	1.19	3.52	2.17	1.29	3.24	2.02	1.39	2.99	1.90	1.54
		27°C	3.96	2.70	1.01	3.82	2.64	1.09	3.68	2.58	1.19	3.53	2.52	1.29	3.24	2.36	1.39	3.00	2.23	1.54
		30°C	3.98	3.33	1.01	3.84	3.26	1.10	3.71	3.19	1.19	3.56	3.11	1.29	3.28	2.91	1.40	3.04	2.75	1.54
		33°C	4.05	4.05	1.02	3.92	3.92	1.10	3.80	3.80	1.19	3.67	3.67	1.30	3.40	3.40	1.41	3.18	3.18	1.55
	22°C	27°C	4.35	2.30	1.03	4.19	2.24	1.11	4.04	2.19	1.21	3.88	2.13	1.31	3.56	1.98	1.42	3.30	1.87	1.57
		30°C	4.35	2.82	1.03	4.20	2.76	1.12	4.04	2.70	1.21	3.88	2.63	1.31	3.57	2.47	1.42	3.30	2.34	1.57
		33°C	4.36	3.30	1.03	4.21	3.24	1.12	4.05	3.17	1.21	3.89	3.10	1.31	3.58	2.91	1.42	3.32	2.76	1.57
		36°C	4.39	3.73	1.03	4.24	3.66	1.12	4.10	3.59	1.21	3.95	3.50	1.32	3.64	3.28	1.43	3.40	3.09	1.58
410	16°C	21°C	3.72	2.59	1.00	3.59	2.52	1.08	3.45	2.45	1.17	3.31	2.39	1.27	3.03	2.22	1.38	2.80	2.09	1.52
		24°C	3.74	3.14	1.00	3.61	3.07	1.09	3.47	2.99	1.18	3.33	2.91	1.27	3.06	2.72	1.38	2.83	2.56	1.52
		27°C	3.80	3.60	1.01	3.68	3.51	1.09	3.55	3.41	1.18	3.43	3.30	1.28	3.17	3.06	1.39	2.95	2.86	1.54
		30°C	3.99	3.99	1.02	3.88	3.88	1.10	3.76	3.76	1.19	3.63	3.63	1.30	3.36	3.36	1.41	3.14	3.14	1.55
	19°C	24°C	4.10	2.48	1.02	3.95	2.42	1.10	3.80	2.36	1.19	3.65	2.29	1.30	3.35	2.14	1.41	3.09	2.02	1.55
		27°C	4.11	2.87	1.02	3.96	2.80	1.10	3.81	2.74	1.20	3.66	2.67	1.30	3.36	2.50	1.41	3.11	2.36	1.55
		30°C	4.14	3.53	1.02	4.00	3.46	1.11	3.85	3.38	1.20	3.71	3.29	1.30	3.41	3.07	1.41	3.17	2.90	1.56
		33°C	4.23	4.23	1.03	4.11	4.11	1.11	3.98	3.98	1.21	3.85	3.85	1.31	3.57	3.57	1.42	3.34	3.34	1.57
	22°C	27°C	4.50	2.43	1.04	4.34	2.37	1.12	4.17	2.31	1.22	4.01	2.25	1.32	3.68	2.10	1.43	3.40	1.99	1.58
		30°C	4.51	2.99	1.04	4.35	2.94	1.13	4.18	2.87	1.22	4.01	2.81	1.32	3.69	2.63	1.43	3.41	2.49	1.58
		33°C	4.52	3.51	1.04	4.37	3.44	1.13	4.21	3.37	1.22	4.04	3.30	1.32	3.72	3.09	1.44	3.44	2.93	1.58
		36°C	4.56	3.96	1.04	4.42	3.89	1.13	4.27	3.80	1.23	4.11	3.71	1.33	3.80	3.46	1.44	3.55	3.26	1.59

Remark:
AFR: Air flow rate (CFM)
EWB: Entering Wet Bulb Temp. (˚C)
EDB: Entering Dry Bulb Temp. (˚C)
TC: Total Cooling Capacity (kW)
SHC: Sensible Heat Capacity (kW)
PI: Power Input

Notes:
1. Ratings shown are gross capacities which do not include a deduction for indoor fan motor heat.
2. shows nominal capacities.
3. Direct interpolation is permissible. Do not extrapolate.

Model: A5CC20C - A5LC20C
Cooling Mode

AFR (CFM)	EWB	EDB	Outdoor temperature																	
			19°C			25°C			30°C			35°C			40°C			46°C		
			TC	SHC	PI	TC	SHC	PI	TC	SHC	PI	TC	SHC	PI	TC	SHC	PI	TC	SHC	PI
480	16°C	21°C	4.98	3.48	1.34	4.80	3.39	1.44	4.63	3.30	1.56	4.44	3.20	1.70	4.08	2.98	1.84	3.76	2.80	2.03
		24°C	4.99	4.16	1.34	4.81	4.07	1.44	4.63	3.97	1.56	4.45	3.88	1.70	4.08	3.62	1.84	3.78	3.41	2.03
		27°C	5.03	4.72	1.34	4.86	4.61	1.45	4.69	4.50	1.57	4.51	4.39	1.70	4.16	4.09	1.85	3.87	3.84	2.04
		30°C	5.18	5.18	1.34	5.03	5.03	1.46	4.88	4.88	1.58	4.72	4.72	1.71	4.38	4.38	1.86	4.10	4.10	2.06
	19°C	24°C	5.49	3.25	1.36	5.30	3.16	1.47	5.11	3.08	1.59	4.90	2.99	1.73	4.51	2.79	1.87	4.17	2.63	2.06
		27°C	5.50	3.71	1.36	5.30	3.63	1.47	5.11	3.55	1.59	4.91	3.46	1.73	4.51	3.24	1.87	4.17	3.07	2.06
		30°C	5.51	4.58	1.36	5.31	4.49	1.47	5.13	4.39	1.59	4.93	4.28	1.73	4.54	4.00	1.87	4.21	3.79	2.07
		33°C	5.57	5.57	1.36	5.39	5.39	1.47	5.21	5.21	1.60	5.04	5.04	1.73	4.66	4.66	1.88	4.36	4.36	2.08
	22°C	27°C	6.04	3.18	1.38	5.83	3.10	1.50	5.62	3.02	1.62	5.40	2.94	1.76	4.97	2.74	1.91	4.60	2.58	2.10
		30°C	6.04	3.87	1.38	5.84	3.79	1.50	5.62	3.70	1.62	5.40	3.62	1.76	4.97	3.38	1.91	4.60	3.21	2.10
		33°C	6.05	4.52	1.38	5.84	4.44	1.50	5.63	4.35	1.62	5.41	4.26	1.76	4.97	4.00	1.91	4.61	3.80	2.10
		36°C	6.07	5.13	1.38	5.87	5.03	1.50	5.66	4.92	1.62	5.46	4.81	1.76	5.03	4.51	1.91	4.68	4.28	2.11
558	16°C	21°C	5.18	3.63	1.35	4.99	3.53	1.46	4.80	3.44	1.58	4.61	3.34	1.71	4.23	3.11	1.86	3.90	2.93	2.04
		24°C	5.20	4.40	1.35	5.01	4.30	1.46	4.82	4.20	1.58	4.63	4.09	1.71	4.25	3.82	1.86	3.93	3.60	2.05
		27°C	5.26	5.00	1.35	5.08	4.88	1.46	4.91	4.76	1.58	4.73	4.61	1.72	4.37	4.29	1.87	4.07	4.01	2.06
		30°C	5.48	5.48	1.36	5.32	5.32	1.47	5.16	5.16	1.60	4.99	4.99	1.74	4.62	4.62	1.88	4.32	4.32	2.08
	19°C	24°C	5.71	3.43	1.37	5.50	3.34	1.48	5.30	3.26	1.61	5.08	3.17	1.74	4.67	2.95	1.89	4.31	2.78	2.08
		27°C	5.72	3.95	1.37	5.51	3.86	1.48	5.31	3.78	1.61	5.09	3.69	1.74	4.68	3.45	1.89	4.33	3.26	2.08
		30°C	5.74	4.87	1.37	5.54	4.77	1.48	5.35	4.66	1.61	5.14	4.55	1.74	4.73	4.25	1.89	4.39	4.02	2.09
		33°C	5.84	5.84	1.38	5.66	5.66	1.49	5.48	5.48	1.62	5.30	5.30	1.76	4.91	4.91	1.91	4.59	4.59	2.11
	22°C	27°C	6.27	3.36	1.39	6.05	3.28	1.51	5.83	3.20	1.64	5.59	3.11	1.78	5.14	2.90	1.93	4.75	2.74	2.12
		30°C	6.28	4.12	1.39	6.06	4.04	1.51	5.83	3.95	1.64	5.60	3.85	1.78	5.15	3.61	1.93	4.76	3.43	2.12
		33°C	6.29	4.83	1.40	6.07	4.74	1.51	5.85	4.64	1.64	5.62	4.54	1.78	5.17	4.26	1.93	4.79	4.04	2.12
		36°C	6.33	5.46	1.40	6.12	5.36	1.52	5.91	5.24	1.64	5.70	5.12	1.78	5.25	4.79	1.93	4.90	4.52	2.13
570	16°C	21°C	5.37	3.78	1.36	5.17	3.69	1.47	4.98	3.59	1.59	4.77	3.49	1.72	4.37	3.25	1.87	4.03	3.06	2.06
		24°C	5.40	4.60	1.36	5.20	4.49	1.47	5.01	4.38	1.59	4.81	4.26	1.73	4.41	3.98	1.87	4.08	3.75	2.06
		27°C	5.49	5.27	1.36	5.31	5.13	1.48	5.13	4.99	1.60	4.94	4.83	1.74	4.57	4.48	1.88	4.26	4.18	2.08
		30°C	5.76	5.76	1.38	5.59	5.59	1.49	5.42	5.42	1.62	5.24	5.24	1.75	4.85	4.85	1.91	4.53	4.53	2.10
	19°C	24°C	5.91	3.63	1.38	5.70	3.54	1.49	5.48	3.45	1.62	5.26	3.35	1.76	4.83	3.13	1.90	4.46	2.95	2.10
		27°C	5.93	4.20	1.38	5.72	4.10	1.50	5.50	4.01	1.62	5.28	3.91	1.76	4.85	3.65	1.91	4.48	3.46	2.10
		30°C	5.98	5.17	1.38	5.77	5.05	1.50	5.56	4.94	1.62	5.35	4.81	1.76	4.92	4.50	1.91	4.57	4.24	2.11
		33°C	6.11	6.11	1.39	5.93	5.93	1.51	5.75	5.75	1.64	5.56	5.56	1.78	5.15	5.15	1.93	4.81	4.81	2.13
	22°C	27°C	6.49	3.55	1.41	6.26	3.47	1.52	6.02	3.38	1.65	5.78	3.30	1.79	5.31	3.07	1.94	4.91	2.90	2.14
		30°C	6.50	4.38	1.41	6.27	4.29	1.52	6.03	4.20	1.65	5.79	4.10	1.79	5.32	3.84	1.94	4.92	3.64	2.14
		33°C	6.52	5.13	1.41	6.30	5.04	1.53	6.07	4.93	1.65	5.83	4.82	1.79	5.36	4.52	1.95	4.97	4.29	2.14
		36°C	6.58	5.79	1.41	6.38	5.68	1.53	6.16	5.56	1.66	5.93	5.42	1.80	5.48	5.06	1.96	5.11	4.76	2.16

Model: A5CC20C - A5LC20C (3 Phase)
Cooling Mode

AFR (CFM)	EWB	EDB	Outdoor temperature																	
			19°C			25°C			30°C			35°C			40°C			46°C		
			TC	SHC	PI	TC	SHC	PI	TC	SHC	PI	TC	SHC	PI	TC	SHC	PI	TC	SHC	PI
480	16°C	21°C	4.98	3.48	1.36	4.80	3.39	1.47	4.63	3.30	1.59	4.44	3.20	1.73	4.08	2.98	1.87	3.76	2.80	2.07
		24°C	4.99	4.16	1.36	4.81	4.07	1.47	4.63	3.97	1.59	4.45	3.88	1.73	4.08	3.62	1.88	3.78	3.41	2.07
		27°C	5.03	4.72	1.36	4.86	4.61	1.47	4.69	4.50	1.60	4.51	4.39	1.73	4.16	4.09	1.88	3.87	3.84	2.08
		30°C	5.18	5.18	1.37	5.03	5.03	1.48	4.88	4.88	1.61	4.72	4.72	1.75	4.38	4.38	1.90	4.10	4.10	2.10
	19°C	24°C	5.49	3.25	1.38	5.30	3.16	1.50	5.11	3.08	1.62	4.90	2.99	1.76	4.51	2.79	1.91	4.17	2.63	2.10
		27°C	5.50	3.71	1.38	5.30	3.63	1.50	5.11	3.55	1.62	4.91	3.46	1.76	4.51	3.24	1.91	4.17	3.07	2.10
		30°C	5.51	4.58	1.38	5.31	4.49	1.50	5.13	4.39	1.62	4.93	4.28	1.76	4.54	4.00	1.91	4.21	3.79	2.11
		33°C	5.57	5.57	1.39	5.39	5.39	1.50	5.21	5.21	1.63	5.04	5.04	1.77	4.66	4.66	1.92	4.36	4.36	2.12
	22°C	27°C	6.04	3.18	1.41	5.83	3.10	1.52	5.62	3.02	1.65	5.40	2.94	1.79	4.97	2.74	1.94	4.60	2.58	2.14
		30°C	6.04	3.87	1.41	5.84	3.79	1.52	5.62	3.70	1.65	5.40	3.62	1.79	4.97	3.38	1.95	4.60	3.21	2.14
		33°C	6.05	4.52	1.41	5.84	4.44	1.53	5.63	4.35	1.65	5.41	4.26	1.79	4.97	4.00	1.95	4.61	3.80	2.14
		36°C	6.07	5.13	1.41	5.87	5.03	1.53	5.66	4.92	1.66	5.46	4.81	1.80	5.03	4.51	1.95	4.68	4.28	2.15
558	16°C	21°C	5.18	3.63	1.37	4.99	3.53	1.48	4.80	3.44	1.61	4.61	3.34	1.74	4.23	3.11	1.89	3.90	2.93	2.08
		24°C	5.20	4.40	1.37	5.01	4.30	1.49	4.82	4.20	1.61	4.63	4.09	1.75	4.25	3.82	1.89	3.93	3.60	2.09
		27°C	5.26	5.00	1.38	5.08	4.88	1.49	4.91	4.76	1.61	4.73	4.61	1.75	4.37	4.29	1.90	4.07	4.01	2.10
		30°C	5.48	5.48	1.39	5.32	5.32	1.50	5.16	5.16	1.63	4.99	4.99	1.77	4.62	4.62	1.92	4.32	4.32	2.12
	19°C	24°C	5.71	3.43	1.40	5.50	3.34	1.51	5.30	3.26	1.64	5.08	3.17	1.77	4.67	2.95	1.92	4.31	2.78	2.12
		27°C	5.72	3.95	1.40	5.51	3.86	1.51	5.31	3.78	1.64	5.09	3.69	1.78	4.68	3.45	1.93	4.33	3.26	2.12
		30°C	5.74	4.87	1.40	5.54	4.77	1.51	5.35	4.66	1.64	5.14	4.55	1.78	4.73	4.25	1.93	4.39	4.02	2.13
		33°C	5.84	5.84	1.40	5.66	5.66	1.52	5.48	5.48	1.65	5.30	5.30	1.79	4.91	4.91	1.94	4.59	4.59	2.15
	22°C	27°C	6.27	3.36	1.42	6.05	3.28	1.54	5.83	3.20	1.67	5.59	3.11	1.81	5.14	2.90	1.96	4.75	2.74	2.16
		30°C	6.28	4.12	1.42	6.06	4.04	1.54	5.83	3.95	1.67	5.60	3.85	1.81	5.15	3.61	1.96	4.76	3.43	2.16
		33°C	6.29	4.83	1.42	6.07	4.74	1.54	5.85	4.64	1.67	5.62	4.54	1.81	5.17	4.26	1.97	4.79	4.04	2.17
		36°C	6.33	5.46	1.42	6.12	5.36	1.54	5.91	5.24	1.67	5.70	5.12	1.82	5.25	4.79	1.97	4.90	4.52	2.18
570	16°C	21°C	5.37	3.78	1.38	5.17	3.69	1.50	4.98	3.59	1.62	4.77	3.49	1.76	4.37	3.25	1.91	4.03	3.06	2.10
		24°C	5.40	4.60	1.39	5.20	4.49	1.50	5.01	4.38	1.62	4.81	4.26	1.76	4.41	3.98	1.91	4.08	3.75	2.10
		27°C	5.49	5.27	1.39	5.31	5.13	1.50	5.13	4.99	1.63	4.94	4.83	1.77	4.57	4.48	1.92	4.26	4.18	2.12
		30°C	5.76	5.76	1.40	5.59	5.59	1.52	5.42	5.42	1.65	5.24	5.24	1.79	4.85	4.85	1.94	4.53	4.53	2.14
	19°C	24°C	5.91	3.63	1.41	5.70	3.54	1.52	5.48	3.45	1.65	5.26	3.35	1.79	4.83	3.13	1.94	4.46	2.95	2.14
		27°C	5.93	4.20	1.41	5.72	4.10	1.52	5.50	4.01	1.65	5.28	3.91	1.79	4.85	3.65	1.94	4.48	3.46	2.14
		30°C	5.98	5.17	1.41	5.77	5.05	1.53	5.56	4.94	1.66	5.35	4.81	1.80	4.92	4.50	1.95	4.57	4.24	2.15
		33°C	6.11	6.11	1.42	5.93	5.93	1.54	5.75	5.75	1.67	5.56	5.56	1.81	5.15	5.15	1.97	4.81	4.81	2.17
	22°C	27°C	6.49	3.55	1.43	6.26	3.47	1.55	6.02	3.38	1.68	5.78	3.30	1.83	5.31	3.07	1.98	4.91	2.90	2.18
		30°C	6.50	4.38	1.43	6.27	4.29	1.55	6.03	4.20	1.68	5.79	4.10	1.83	5.32	3.84	1.98	4.92	3.64	2.18
		33°C	6.52	5.13	1.44	6.30	5.04	1.56	6.07	4.93	1.69	5.83	4.82	1.83	5.36	4.52	1.98	4.97	4.29	2.19
		36°C	6.58	5.79	1.44	6.38	5.68	1.56	6.16	5.56	1.69	5.93	5.42	1.84	5.48	5.06	1.99	5.11	4.76	2.20

Remark:
AFR: Air flow rate (CFM)
EWB: Entering Wet Bulb Temp. (˚C)
EDB: Entering Dry Bulb Temp. (˚C)

TC: Total Cooling Capacity (kW)
SHC: Sensible Heat Capacity (kW)
PI: Power Input

Notes:
1. Ratings shown are gross capacities which do not include a deduction for indoor fan motor heat.
2. shows nominal capacities.
3. Direct interpolation is permissible. Do not extrapolate.

Model: A5CC25C - A5LC25C
Cooling Mode

AFR (CFM)	EWB	EDB	Outdoor temperature																	
			19°C			25°C			30°C			35°C			40°C			46°C		
			TC	SHC	PI	TC	SHC	PI	TC	SHC	PI	TC	SHC	PI	TC	SHC	PI	TC	SHC	PI
535	16°C	21°C	5.80	4.05	1.52	5.60	3.95	1.65	5.39	3.84	1.78	5.17	3.73	1.93	4.75	3.47	2.10	4.39	3.26	2.31
		24°C	5.81	4.85	1.52	5.61	4.74	1.65	5.40	4.63	1.78	5.18	4.52	1.93	4.76	4.22	2.10	4.40	3.98	2.31
		27°C	5.86	5.50	1.52	5.66	5.38	1.65	5.46	5.25	1.79	5.26	5.12	1.94	4.85	4.76	2.10	4.51	4.47	2.32
		30°C	6.04	6.04	1.53	5.86	5.86	1.66	5.69	5.69	1.80	5.50	5.50	1.95	5.10	5.10	2.12	4.77	4.77	2.34
	19°C	24°C	6.40	3.78	1.55	6.18	3.69	1.67	5.95	3.59	1.81	5.72	3.49	1.97	5.25	3.25	2.13	4.86	3.06	2.35
		27°C	6.41	4.33	1.55	6.18	4.23	1.67	5.95	4.13	1.81	5.72	4.03	1.97	5.26	3.77	2.13	4.86	3.57	2.35
		30°C	6.42	5.34	1.55	6.19	5.23	1.67	5.98	5.11	1.82	5.75	4.99	1.97	5.29	4.67	2.14	4.91	4.41	2.36
		33°C	6.49	6.49	1.55	6.28	6.28	1.68	6.08	6.08	1.82	5.87	5.87	1.98	5.43	5.43	2.15	5.08	5.08	2.37
	22°C	27°C	7.04	3.70	1.57	6.80	3.61	1.71	6.55	3.52	1.85	6.30	3.43	2.01	5.79	3.19	2.18	5.36	3.01	2.40
		30°C	7.05	4.51	1.57	6.80	4.42	1.71	6.55	4.32	1.85	6.30	4.21	2.01	5.79	3.94	2.18	5.36	3.74	2.40
		33°C	7.05	5.27	1.57	6.80	5.17	1.71	6.56	5.07	1.85	6.30	4.96	2.01	5.80	4.66	2.18	5.37	4.43	2.40
		36°C	7.07	5.98	1.58	6.84	5.86	1.71	6.60	5.73	1.85	6.36	5.61	2.01	5.87	5.26	2.18	5.45	4.99	2.40
660	16°C	21°C	6.04	4.23	1.54	5.82	4.12	1.66	5.60	4.01	1.80	5.37	3.89	1.95	4.93	3.63	2.11	4.55	3.41	2.33
		24°C	6.06	5.13	1.54	5.84	5.01	1.66	5.62	4.89	1.80	5.39	4.77	1.95	4.96	4.45	2.12	4.58	4.20	2.33
		27°C	6.13	5.83	1.54	5.92	5.69	1.67	5.72	5.54	1.81	5.51	5.38	1.96	5.09	5.00	2.13	4.74	4.67	2.35
		30°C	6.39	6.39	1.55	6.20	6.20	1.68	6.01	6.01	1.82	5.82	5.82	1.98	5.39	5.39	2.15	5.04	5.04	2.37
	19°C	24°C	6.65	4.00	1.56	6.42	3.90	1.69	6.18	3.80	1.83	5.93	3.69	1.98	5.44	3.44	2.15	5.03	3.24	2.37
		27°C	6.66	4.61	1.56	6.43	4.50	1.69	6.19	4.40	1.83	5.94	4.30	1.99	5.46	4.02	2.15	5.04	3.80	2.37
		30°C	6.70	5.68	1.56	6.46	5.56	1.69	6.23	5.43	1.83	5.99	5.30	1.99	5.52	4.96	2.16	5.12	4.68	2.38
		33°C	6.81	6.81	1.57	6.60	6.60	1.70	6.39	6.39	1.84	6.18	6.18	2.00	5.72	5.72	2.17	5.35	5.35	2.40
	22°C	27°C	7.31	3.91	1.59	7.05	3.82	1.72	6.79	3.73	1.87	6.52	3.63	2.02	5.99	3.38	2.20	5.54	3.19	2.42
		30°C	7.32	4.80	1.59	7.06	4.70	1.72	6.80	4.60	1.87	6.53	4.49	2.02	6.00	4.21	2.20	5.55	3.99	2.42
		33°C	7.33	5.63	1.59	7.08	5.52	1.72	6.82	5.41	1.87	6.55	5.29	2.03	6.03	4.97	2.20	5.58	4.71	2.42
		36°C	7.38	6.36	1.59	7.14	6.24	1.73	6.89	6.11	1.87	6.64	5.97	2.03	6.13	5.59	2.21	5.71	5.27	2.43
690	16°C	21°C	6.26	4.41	1.55	6.03	4.30	1.67	5.80	4.18	1.81	5.56	4.07	1.97	5.10	3.79	2.13	4.70	3.56	2.35
		24°C	6.29	5.36	1.55	6.07	5.23	1.68	5.84	5.10	1.82	5.60	4.97	1.97	5.14	4.64	2.14	4.75	4.37	2.35
		27°C	6.40	6.14	1.55	6.19	5.98	1.68	5.98	5.81	1.82	5.76	5.63	1.98	5.33	5.22	2.15	4.96	4.87	2.37
		30°C	6.72	6.72	1.57	6.52	6.52	1.70	6.32	6.32	1.84	6.11	6.11	2.00	5.66	5.66	2.17	5.28	5.28	2.40
	19°C	24°C	6.89	4.23	1.57	6.64	4.12	1.70	6.39	4.02	1.85	6.13	3.91	2.00	5.63	3.64	2.17	5.19	3.44	2.39
		27°C	6.91	4.89	1.57	6.66	4.78	1.70	6.41	4.67	1.85	6.16	4.55	2.00	5.65	4.26	2.17	5.22	4.03	2.39
		30°C	6.97	6.02	1.58	6.72	5.89	1.71	6.48	5.76	1.85	6.23	5.61	2.01	5.74	5.24	2.18	5.33	4.94	2.40
		33°C	7.12	7.12	1.59	6.91	6.91	1.72	6.70	6.70	1.86	6.48	6.48	2.02	6.00	6.00	2.20	5.61	5.61	2.43
	22°C	27°C	7.56	4.14	1.60	7.29	4.05	1.74	7.02	3.94	1.88	6.74	3.84	2.04	6.19	3.58	2.21	5.72	3.38	2.44
		30°C	7.58	5.10	1.60	7.31	5.00	1.74	7.03	4.89	1.88	6.75	4.78	2.04	6.20	4.48	2.21	5.74	4.25	2.44
		33°C	7.60	5.98	1.61	7.34	5.87	1.74	7.07	5.75	1.89	6.79	5.62	2.05	6.25	5.27	2.22	5.79	5.00	2.44
		36°C	7.67	6.75	1.61	7.43	6.63	1.75	7.18	6.48	1.89	6.92	6.32	2.05	6.39	5.90	2.23	5.96	5.55	2.46

Model: A5CC25C - A5LC25C (3 Phase)
Cooling Mode

AFR (CFM)	EWB	EDB	Outdoor temperature																	
			19°C			25°C			30°C			35°C			40°C			46°C		
			TC	SHC	PI	TC	SHC	PI	TC	SHC	PI	TC	SHC	PI	TC	SHC	PI	TC	SHC	PI
535	16°C	21°C	6.32	4.41	1.73	6.09	4.30	1.87	5.87	4.18	2.02	5.63	4.06	2.19	5.17	3.78	2.38	4.77	3.55	2.62
		24°C	6.33	5.28	1.73	6.10	5.16	1.87	5.88	5.04	2.02	5.64	4.92	2.20	5.18	4.59	2.38	4.79	4.33	2.63
		27°C	6.38	5.99	1.73	6.16	5.85	1.87	5.95	5.71	2.03	5.72	5.57	2.20	5.28	5.18	2.39	4.91	4.87	2.64
		30°C	6.57	6.57	1.74	6.38	6.38	1.88	6.19	6.19	2.04	5.99	5.99	2.22	5.55	5.55	2.41	5.20	5.20	2.66
	19°C	24°C	6.97	4.12	1.76	6.72	4.01	1.90	6.48	3.91	2.06	6.22	3.80	2.23	5.72	3.54	2.42	5.29	3.33	2.67
		27°C	6.97	4.71	1.76	6.73	4.61	1.90	6.48	4.50	2.06	6.23	4.39	2.23	5.72	4.11	2.42	5.29	3.89	2.67
		30°C	6.98	5.81	1.76	6.74	5.69	1.90	6.50	5.56	2.06	6.26	5.43	2.24	5.76	5.08	2.43	5.35	4.81	2.67
		33°C	7.07	7.07	1.76	6.84	6.84	1.91	6.62	6.62	2.07	6.39	6.39	2.24	5.91	5.91	2.44	5.53	5.53	2.69
	22°C	27°C	7.67	4.03	1.79	7.40	3.93	1.94	7.13	3.83	2.10	6.85	3.73	2.28	6.30	3.47	2.47	5.83	3.28	2.72
		30°C	7.67	4.91	1.79	7.40	4.81	1.94	7.13	4.70	2.10	6.85	4.59	2.28	6.30	4.29	2.47	5.84	4.07	2.72
		33°C	7.67	5.74	1.79	7.41	5.63	1.94	7.14	5.52	2.10	6.86	5.40	2.28	6.31	5.07	2.47	5.85	4.82	2.72
		36°C	7.70	6.51	1.79	7.44	6.37	1.94	7.19	6.24	2.10	6.92	6.10	2.28	6.39	5.72	2.48	5.94	5.43	2.73
660	16°C	21°C	6.57	4.60	1.74	6.34	4.48	1.89	6.10	4.36	2.04	5.85	4.24	2.21	5.37	3.95	2.40	4.95	3.72	2.65
		24°C	6.59	5.58	1.74	6.36	5.45	1.89	6.12	5.32	2.04	5.87	5.19	2.22	5.39	4.84	2.40	4.99	4.57	2.65
		27°C	6.67	6.34	1.75	6.45	6.19	1.89	6.23	6.04	2.05	6.00	5.86	2.22	5.54	5.44	2.41	5.16	5.09	2.66
		30°C	6.95	6.95	1.76	6.75	6.75	1.91	6.54	6.54	2.07	6.33	6.33	2.25	5.87	5.87	2.44	5.48	5.48	2.69
	19°C	24°C	7.24	4.35	1.77	6.98	4.24	1.92	6.72	4.13	2.08	6.45	4.02	2.25	5.93	3.74	2.44	5.47	3.53	2.69
		27°C	7.26	5.01	1.77	7.00	4.90	1.92	6.73	4.79	2.08	6.46	4.68	2.25	5.94	4.37	2.45	5.49	4.14	2.69
		30°C	7.29	6.18	1.77	7.04	6.05	1.92	6.78	5.91	2.08	6.52	5.77	2.26	6.01	5.40	2.45	5.57	5.10	2.70
		33°C	7.41	7.41	1.78	7.19	7.19	1.93	6.96	6.96	2.09	6.73	6.73	2.27	6.23	6.23	2.47	5.82	5.82	2.73
	22°C	27°C	7.96	4.26	1.80	7.68	4.16	1.95	7.39	4.06	2.12	7.10	3.95	2.30	6.52	3.68	2.49	6.03	3.47	2.74
		30°C	7.97	5.23	1.81	7.69	5.12	1.96	7.40	5.01	2.12	7.11	4.89	2.30	6.53	4.58	2.49	6.04	4.35	2.75
		33°C	7.98	6.13	1.81	7.70	6.01	1.96	7.42	5.89	2.12	7.13	5.76	2.30	6.56	5.41	2.50	6.08	5.13	2.75
		36°C	8.03	6.93	1.81	7.77	6.80	1.96	7.50	6.65	2.13	7.23	6.50	2.31	6.67	6.08	2.50	6.22	5.74	2.76
690	16°C	21°C	6.82	4.80	1.76	6.57	4.68	1.90	6.31	4.55	2.06	6.05	4.43	2.23	5.55	4.12	2.42	5.12	3.88	2.67
		24°C	6.85	5.83	1.76	6.60	5.69	1.90	6.35	5.55	2.06	6.10	5.41	2.23	5.60	5.05	2.42	5.17	4.76	2.67
		27°C	6.96	6.68	1.76	6.73	6.51	1.91	6.51	6.33	2.07	6.27	6.13	2.25	5.80	5.68	2.44	5.40	5.30	2.69
		30°C	7.31	7.31	1.78	7.10	7.10	1.93	6.88	6.88	2.09	6.65	6.65	2.27	6.16	6.16	2.47	5.75	5.75	2.72
	19°C	24°C	7.50	4.60	1.79	7.23	4.49	1.93	6.96	4.37	2.10	6.67	4.26	2.27	6.12	3.97	2.46	5.65	3.74	2.71
		27°C	7.52	5.33	1.79	7.25	5.20	1.94	6.98	5.08	2.10	6.70	4.96	2.27	6.15	4.64	2.47	5.69	4.39	2.72
		30°C	7.59	6.55	1.79	7.32	6.41	1.94	7.06	6.26	2.10	6.79	6.11	2.28	6.25	5.70	2.47	5.80	5.38	2.73
		33°C	7.75	7.75	1.80	7.52	7.52	1.95	7.29	7.29	2.12	7.05	7.05	2.30	6.53	6.53	2.50	6.11	6.11	2.76
	22°C	27°C	8.23	4.50	1.82	7.94	4.40	1.97	7.64	4.29	2.14	7.33	4.18	2.32	6.74	3.90	2.51	6.23	3.68	2.77
		30°C	8.25	5.55	1.82	7.96	5.45	1.97	7.66	5.33	2.14	7.35	5.21	2.32	6.75	4.88	2.51	6.24	4.62	2.77
		33°C	8.28	6.51	1.82	7.99	6.39	1.98	7.70	6.26	2.14	7.40	6.12	2.32	6.80	5.74	2.52	6.30	5.44	2.77
		36°C	8.35	7.35	1.83	8.09	7.21	1.98	7.81	7.05	2.15	7.53	6.88	2.33	6.96	6.42	2.53	6.49	6.04	2.79

Remark:
AFR: Air flow rate (CFM)
EWB: Entering Wet Bulb Temp. (˚C)
EDB: Entering Dry Bulb Temp. (˚C)
TC: Total Cooling Capacity (kW)
SHC: Sensible Heat Capacity (kW)
PI: Power Input

Notes:
1. Ratings shown are gross capacities which do not include a deduction for indoor fan motor heat.
2. shows nominal capacities.
3. Direct interpolation is permissible. Do not extrapolate.

Model: A5CC28C - A5LC28C
Cooling Mode

AFR (CFM)	EWB	EDB	Outdoor temperature																	
			19°C			25°C			30°C			35°C			40°C			46°C		
			TC	SHC	PI	TC	SHC	PI	TC	SHC	PI	TC	SHC	PI	TC	SHC	PI	TC	SHC	PI
710	16°C	21°C	7.19	5.09	2.20	6.93	4.95	2.38	6.68	4.82	2.57	6.41	4.68	2.79	5.88	4.36	3.03	5.43	4.10	3.34
		24°C	7.20	6.09	2.20	6.94	5.95	2.38	6.68	5.81	2.57	6.42	5.67	2.79	5.90	5.29	3.03	5.45	5.00	3.34
		27°C	7.25	6.91	2.20	7.01	6.75	2.38	6.77	6.59	2.58	6.51	6.42	2.80	6.01	5.98	3.04	5.59	5.59	3.35
		30°C	7.48	7.48	2.21	7.26	7.26	2.40	7.04	7.04	2.60	6.82	6.82	2.82	6.32	6.32	3.06	5.91	5.91	3.38
	19°C	24°C	7.93	4.75	2.23	7.65	4.63	2.42	7.37	4.51	2.62	7.08	4.38	2.84	6.50	4.08	3.08	6.01	3.84	3.40
		27°C	7.93	5.43	2.23	7.65	5.31	2.42	7.37	5.19	2.62	7.08	5.06	2.84	6.51	4.74	3.08	6.02	4.49	3.40
		30°C	7.95	6.71	2.23	7.67	6.56	2.42	7.40	6.42	2.62	7.12	6.26	2.84	6.55	5.86	3.09	6.08	5.54	3.40
		33°C	8.04	8.04	2.24	7.78	7.78	2.42	7.53	7.53	2.63	7.27	7.27	2.85	6.73	6.73	3.10	6.29	6.29	3.42
	22°C	27°C	8.72	4.65	2.27	8.42	4.54	2.46	8.11	4.42	2.67	7.80	4.30	2.90	7.17	4.01	3.14	6.64	3.78	3.46
		30°C	8.72	5.67	2.27	8.42	5.54	2.46	8.11	5.42	2.67	7.80	5.29	2.90	7.17	4.95	3.14	6.64	4.70	3.46
		33°C	8.73	6.62	2.27	8.43	6.49	2.46	8.12	6.36	2.67	7.80	6.23	2.90	7.18	5.85	3.14	6.66	5.56	3.46
		36°C	8.76	7.50	2.27	8.47	7.35	2.47	8.17	7.20	2.67	7.88	7.04	2.90	7.26	6.60	3.15	6.75	6.26	3.47
770	16°C	21°C	7.48	5.30	2.22	7.21	5.17	2.40	6.93	5.03	2.60	6.65	4.89	2.82	6.10	4.55	3.05	5.63	4.28	3.37
		24°C	7.50	6.44	2.22	7.23	6.29	2.40	6.96	6.14	2.60	6.68	5.98	2.82	6.13	5.58	3.06	5.67	5.27	3.37
		27°C	7.59	7.31	2.22	7.33	7.14	2.41	7.08	6.96	2.61	6.83	6.75	2.83	6.30	6.27	3.07	5.87	5.86	3.39
		30°C	7.91	7.91	2.24	7.68	7.68	2.43	7.44	7.44	2.63	7.20	7.20	2.86	6.67	6.67	3.10	6.24	6.24	3.43
	19°C	24°C	8.24	5.02	2.25	7.94	4.89	2.44	7.65	4.76	2.64	7.34	4.63	2.87	6.74	4.32	3.11	6.23	4.07	3.42
		27°C	8.25	5.78	2.25	7.96	5.65	2.44	7.66	5.52	2.64	7.35	5.39	2.87	6.75	5.04	3.11	6.24	4.77	3.43
		30°C	8.29	7.13	2.26	8.00	6.97	2.44	7.72	6.82	2.65	7.42	6.65	2.87	6.83	6.22	3.12	6.34	5.88	3.44
		33°C	8.43	8.43	2.26	8.17	8.17	2.45	7.91	7.91	2.66	7.65	7.65	2.89	7.08	7.08	3.14	6.62	6.62	3.47
	22°C	27°C	9.05	4.91	2.30	8.73	4.80	2.49	8.41	4.68	2.69	8.07	4.55	2.92	7.42	4.24	3.17	6.86	4.00	3.49
		30°C	9.06	6.03	2.30	8.74	5.90	2.49	8.42	5.77	2.70	8.08	5.64	2.92	7.43	5.28	3.17	6.87	5.01	3.49
		33°C	9.08	7.06	2.30	8.76	6.93	2.49	8.44	6.79	2.70	8.11	6.64	2.93	7.46	6.23	3.17	6.91	5.92	3.50
		36°C	9.13	7.98	2.30	8.84	7.83	2.49	8.53	7.67	2.70	8.22	7.49	2.93	7.58	7.01	3.18	7.07	6.61	3.51
810	16°C	21°C	7.75	5.53	2.24	7.47	5.39	2.42	7.18	5.25	2.62	6.88	5.10	2.84	6.31	4.75	3.08	5.82	4.47	3.39
		24°C	7.79	6.72	2.24	7.51	6.56	2.42	7.23	6.40	2.62	6.94	6.23	2.84	6.37	5.82	3.08	5.88	5.49	3.40
		27°C	7.92	7.70	2.24	7.66	7.50	2.43	7.40	7.29	2.63	7.14	7.07	2.86	6.59	6.55	3.10	6.14	6.11	3.42
		30°C	8.31	8.31	2.26	8.07	8.07	2.45	7.82	7.82	2.66	7.57	7.57	2.89	7.01	7.01	3.14	6.54	6.54	3.46
	19°C	24°C	8.53	5.31	2.27	8.22	5.18	2.46	7.91	5.04	2.66	7.59	4.91	2.89	6.96	4.57	3.13	6.43	4.31	3.45
		27°C	8.56	6.14	2.27	8.25	6.00	2.46	7.94	5.86	2.67	7.62	5.72	2.89	7.00	5.34	3.14	6.47	5.06	3.46
		30°C	8.63	7.56	2.28	8.32	7.39	2.47	8.02	7.22	2.67	7.72	7.04	2.90	7.11	6.58	3.15	6.60	6.20	3.47
		33°C	8.82	8.82	2.29	8.56	8.56	2.48	8.29	8.29	2.69	8.02	8.02	2.92	7.43	7.43	3.18	6.95	6.95	3.51
	22°C	27°C	9.36	5.19	2.32	9.03	5.08	2.51	8.69	4.95	2.72	8.34	4.82	2.95	7.66	4.50	3.20	7.08	4.25	3.52
		30°C	9.38	6.40	2.32	9.05	6.28	2.51	8.71	6.14	2.72	8.36	6.00	2.95	7.68	5.62	3.20	7.10	5.33	3.52
		33°C	9.41	7.50	2.32	9.09	7.37	2.51	8.75	7.21	2.72	8.41	7.05	2.95	7.74	6.61	3.20	7.17	6.28	3.53
		36°C	9.50	8.47	2.32	9.20	8.31	2.52	8.88	8.13	2.73	8.56	7.93	2.97	7.91	7.40	3.22	7.38	6.96	3.55
850	16°C	21°C	7.75	5.58	2.26	7.48	5.44	2.43	7.20	5.31	2.63	6.92	5.17	2.86	6.36	4.82	3.11	5.87	4.54	3.46
		24°C	7.78	6.82	2.26	7.50	6.68	2.43	7.23	6.53	2.63	6.95	6.37	2.86	6.39	5.96	3.11	5.92	5.62	3.46
		27°C	7.90	7.82	2.26	7.66	7.63	2.44	7.42	7.42	2.64	7.17	7.17	2.87	6.64	6.64	3.13	6.21	6.21	3.49
		30°C	8.33	8.33	2.29	8.10	8.10	2.46	7.86	7.86	2.67	7.62	7.62	2.90	7.07	7.07	3.17	6.62	6.62	3.52
	19°C	24°C	8.53	5.35	2.29	8.23	5.22	2.47	7.94	5.10	2.67	7.63	4.97	2.90	7.02	4.64	3.16	6.50	4.39	3.51
		27°C	8.55	6.20	2.30	8.25	6.07	2.47	7.96	5.95	2.67	7.65	5.82	2.90	7.04	5.45	3.16	6.52	5.18	3.51
		30°C	8.59	7.71	2.30	8.31	7.54	2.48	8.03	7.38	2.68	7.74	7.21	2.91	7.14	6.74	3.17	6.66	6.35	3.52
		33°C	8.82	8.82	2.31	8.57	8.57	2.49	8.33	8.33	2.70	8.08	8.08	2.93	7.50	7.50	3.20	7.04	7.04	3.56
	22°C	27°C	9.37	5.25	2.34	9.05	5.13	2.52	8.73	5.01	2.72	8.40	4.88	2.96	7.74	4.56	3.22	7.17	4.32	3.57
		30°C	9.39	6.49	2.34	9.07	6.36	2.52	8.75	6.22	2.73	8.42	6.09	2.96	7.75	5.71	3.22	7.19	5.43	3.57
		33°C	9.42	7.65	2.34	9.09	7.51	2.52	8.77	7.38	2.73	8.45	7.23	2.96	7.78	6.80	3.22	7.23	6.46	3.57
		36°C	9.50	8.66	2.35	9.20	8.49	2.53	8.91	8.32	2.74	8.62	8.11	2.97	7.98	7.58	3.24	7.47	7.16	3.60

Model: A5CC28C - A5LC28C (3 Phase)
Cooling Mode

AFR (CFM)	EWB	EDB	Outdoor temperature																	
			19°C			25°C			30°C			35°C			40°C			46°C		
			TC	SHC	PI	TC	SHC	PI	TC	SHC	PI	TC	SHC	PI	TC	SHC	PI	TC	SHC	PI
710	16°C	21°C	7.46	5.28	2.19	7.20	5.14	2.36	6.93	5.00	2.56	6.65	4.86	2.78	6.11	4.52	3.01	5.64	4.26	3.32
		24°C	7.47	6.32	2.19	7.21	6.18	2.36	6.94	6.04	2.56	6.66	5.89	2.78	6.12	5.50	3.01	5.66	5.19	3.32
		27°C	7.53	7.17	2.19	7.28	7.01	2.37	7.02	6.84	2.57	6.76	6.67	2.78	6.24	6.20	3.02	5.80	5.80	3.33
		30°C	7.76	7.76	2.20	7.54	7.54	2.38	7.31	7.31	2.58	7.07	7.07	2.80	6.56	6.56	3.05	6.14	6.14	3.37
	19°C	24°C	8.23	4.93	2.22	7.94	4.81	2.40	7.65	4.68	2.60	7.35	4.55	2.82	6.75	4.23	3.06	6.24	3.99	3.38
		27°C	8.24	5.64	2.22	7.95	5.51	2.40	7.65	5.39	2.60	7.35	5.26	2.82	6.76	4.92	3.06	6.25	4.66	3.38
		30°C	8.25	6.96	2.22	7.96	6.81	2.40	7.68	6.66	2.61	7.39	6.50	2.83	6.80	6.08	3.07	6.31	5.75	3.38
		33°C	8.35	8.35	2.23	8.07	8.07	2.41	7.81	7.81	2.61	7.55	7.55	2.84	6.98	6.98	3.08	6.53	6.53	3.40
	22°C	27°C	9.05	4.83	2.26	8.74	4.71	2.45	8.42	4.59	2.65	8.09	4.46	2.88	7.44	4.16	3.12	6.89	3.92	3.44
		30°C	9.06	5.88	2.26	8.74	5.76	2.45	8.42	5.62	2.65	8.09	5.49	2.88	7.44	5.14	3.12	6.89	4.87	3.44
		33°C	9.06	6.87	2.26	8.75	6.74	2.45	8.43	6.60	2.66	8.10	6.47	2.88	7.45	6.07	3.12	6.91	5.77	3.44
		36°C	9.09	7.79	2.26	8.79	7.63	2.45	8.49	7.47	2.66	8.18	7.31	2.89	7.54	6.85	3.13	7.01	6.50	3.45
770	16°C	21°C	7.76	5.50	2.20	7.48	5.36	2.38	7.20	5.22	2.58	6.90	5.07	2.80	6.33	4.72	3.04	5.84	4.45	3.35
		24°C	7.78	6.68	2.21	7.50	6.52	2.39	7.22	6.37	2.58	6.93	6.21	2.80	6.37	5.79	3.04	5.89	5.47	3.35
		27°C	7.88	7.59	2.21	7.61	7.41	2.39	7.35	7.22	2.59	7.09	7.01	2.81	6.54	6.51	3.05	6.10	6.09	3.37
		30°C	8.21	8.21	2.23	7.97	7.97	2.41	7.73	7.73	2.62	7.48	7.48	2.84	6.93	6.93	3.09	6.47	6.47	3.41
	19°C	24°C	8.55	5.21	2.24	8.25	5.08	2.43	7.94	4.94	2.63	7.62	4.81	2.85	7.00	4.48	3.09	6.46	4.22	3.41
		27°C	8.57	6.00	2.24	8.26	5.87	2.43	7.95	5.73	2.63	7.63	5.60	2.85	7.01	5.23	3.09	6.48	4.95	3.41
		30°C	8.61	7.40	2.24	8.31	7.24	2.43	8.01	7.08	2.63	7.70	6.90	2.86	7.09	6.46	3.10	6.58	6.10	3.42
		33°C	8.75	8.75	2.25	8.48	8.48	2.44	8.21	8.21	2.65	7.94	7.94	2.87	7.35	7.35	3.12	6.88	6.88	3.45
	22°C	27°C	9.39	5.10	2.28	9.06	4.98	2.47	8.73	4.85	2.68	8.38	4.72	2.91	7.70	4.40	3.15	7.12	4.16	3.47
		30°C	9.41	6.26	2.28	9.07	6.13	2.47	8.74	5.99	2.68	8.39	5.85	2.91	7.71	5.48	3.15	7.13	5.20	3.47
		33°C	9.42	7.33	2.28	9.10	7.19	2.47	8.76	7.04	2.68	8.42	6.89	2.91	7.74	6.47	3.16	7.18	6.14	3.48
		36°C	9.48	8.29	2.29	9.17	8.13	2.48	8.85	7.96	2.69	8.53	7.78	2.92	7.87	7.28	3.17	7.34	6.86	3.49
810	16°C	21°C	8.05	5.74	2.22	7.75	5.60	2.40	7.45	5.45	2.60	7.15	5.30	2.82	6.55	4.93	3.06	6.04	4.64	3.37
		24°C	8.09	6.98	2.23	7.80	6.81	2.41	7.50	6.65	2.61	7.20	6.47	2.83	6.61	6.04	3.07	6.11	5.69	3.38
		27°C	8.22	8.00	2.23	7.95	7.79	2.42	7.68	7.57	2.62	7.41	7.34	2.84	6.84	6.80	3.08	6.38	6.35	3.40
		30°C	8.63	8.63	2.25	8.38	8.38	2.44	8.12	8.12	2.65	7.85	7.85	2.87	7.27	7.27	3.12	6.79	6.79	3.44
	19°C	24°C	8.86	5.51	2.26	8.54	5.37	2.45	8.21	5.23	2.65	7.88	5.09	2.87	7.23	4.75	3.12	6.67	4.48	3.43
		27°C	8.88	6.37	2.26	8.56	6.23	2.45	8.24	6.08	2.65	7.91	5.93	2.88	7.26	5.55	3.12	6.71	5.25	3.44
		30°C	8.96	7.84	2.27	8.64	7.67	2.45	8.33	7.50	2.66	8.01	7.31	2.88	7.38	6.83	3.13	6.85	6.43	3.45
		33°C	9.15	9.15	2.28	8.88	8.88	2.47	8.61	8.61	2.68	8.33	8.33	2.91	7.71	7.71	3.16	7.21	7.21	3.49
	22°C	27°C	9.72	5.39	2.30	9.37	5.27	2.49	9.02	5.14	2.70	8.66	5.00	2.93	7.95	4.67	3.18	7.35	4.41	3.50
		30°C	9.74	6.64	2.30	9.39	6.52	2.50	9.04	6.38	2.70	8.68	6.23	2.93	7.97	5.83	3.18	7.37	5.53	3.50
		33°C	9.77	7.79	2.31	9.44	7.65	2.50	9.09	7.49	2.71	8.73	7.32	2.94	8.03	6.86	3.19	7.44	6.51	3.51
		36°C	9.86	8.79	2.31	9.55	8.63	2.51	9.22	8.44	2.72	8.89	8.23	2.95	8.21	7.68	3.20	7.66	7.23	3.53
850	16°C	21°C	8.04	5.79	2.24	7.76	5.65	2.42	7.48	5.51	2.61	7.18	5.37	2.84	6.60	5.00	3.09	6.10	4.71	3.44
		24°C	8.07	7.08	2.25	7.78	6.93	2.42	7.50	6.78	2.62	7.21	6.62	2.84	6.63	6.19	3.10	6.14	5.84	3.44
		27°C	8.21	8.12	2.25	7.95	7.92	2.43	7.70	7.70	2.63	7.44	7.44	2.86	6.89	6.89	3.12	6.44	6.44	3.47
		30°C	8.65	8.65	2.27	8.40	8.40	2.45	8.16	8.16	2.65	7.91	7.91	2.89	7.34	7.34	3.15	6.87	6.87	3.50
	19°C	24°C	8.85	5.55	2.28	8.55	5.42	2.46	8.24	5.29	2.66	7.92	5.16	2.89	7.29	4.82	3.14	6.74	4.55	3.49
		27°C	8.88	6.44	2.28	8.57	6.31	2.46	8.26	6.17	2.66	7.94	6.04	2.89	7.31	5.66	3.15	6.76	5.37	3.49
		30°C	8.92	8.00	2.29	8.62	7.83	2.46	8.33	7.66	2.66	8.03	7.48	2.89	7.42	6.99	3.15	6.91	6.59	3.50
		33°C	9.16	9.16	2.30	8.90	8.90	2.48	8.65	8.65	2.68	8.39	8.39	2.92	7.79	7.79	3.18	7.30	7.30	3.54
	22°C	27°C	9.73	5.45	2.33	9.39	5.32	2.51	9.07	5.20	2.71	8.72	5.07	2.94	8.03	4.74	3.20	7.44	4.48	3.55
		30°C	9.75	6.74	2.33	9.42	6.60	2.51	9.08	6.46	2.71	8.74	6.32	2.94	8.05	5.93	3.20	7.46	5.64	3.55
		33°C	9.77	7.94	2.33	9.44	7.80	2.51	9.10	7.66	2.71	8.77	7.51	2.94	8.08	7.05	3.20	7.51	6.70	3.55
		36°C	9.87	8.99	2.33	9.55	8.82	2.51	9.24	8.63	2.72	8.94	8.42	2.96	8.28	7.87	3.22	7.75	7.43	3.58

Remark:
AFR: Air flow rate (CFM)
EWB: Entering Wet Bulb Temp. (˚C)
EDB: Entering Dry Bulb Temp. (˚C)
TC: Total Cooling Capacity (kW)
SHC: Sensible Heat Capacity (kW)
PI: Power Input

Notes:
1. Ratings shown are gross capacities which do not include a deduction for indoor fan motor heat.
2. shows nominal capacities.
3. Direct interpolation is permissible. Do not extrapolate.

Model: A5CC38C - A5LC~~35C~~ 35D
Cooling Mode

AFR (CFM)	EWB	EDB	Outdoor temperature																	
			19°C			25°C			30°C			35°C			40°C			46°C		
			TC	SHC	PI	TC	SHC	PI	TC	SHC	PI	TC	SHC	PI	TC	SHC	PI	TC	SHC	PI
920	16°C	21°C	9.14	5.00	3.05	8.81	4.87	3.05	8.47	4.75	3.12	8.13	4.61	3.20	7.76	4.48	3.40	7.31	4.31	3.69
		24°C	9.18	6.07	3.05	8.84	5.93	3.06	8.51	5.80	3.12	8.16	5.66	3.20	7.81	5.52	3.41	7.36	5.33	3.69
		27°C	9.29	7.01	3.05	8.99	6.84	3.06	8.69	6.66	3.13	8.38	6.46	3.22	8.07	6.23	3.43	7.69	5.95	3.72
		30°C	9.76	7.52	3.07	9.48	7.30	3.09	9.20	7.09	3.16	8.90	6.86	3.25	8.58	6.63	3.47	8.19	6.33	3.77
	19°C	24°C	10.06	4.98	3.09	9.70	4.86	3.10	9.33	4.73	3.17	8.96	4.61	3.26	8.57	4.48	3.46	8.08	4.31	3.76
		27°C	10.09	6.08	3.09	9.73	5.94	3.10	9.37	5.81	3.17	8.99	5.68	3.26	8.60	5.54	3.47	8.11	5.37	3.76
		30°C	10.14	7.11	3.09	9.78	6.96	3.11	9.43	6.82	3.17	9.07	6.66	3.26	8.69	6.49	3.47	8.24	6.27	3.77
		33°C	10.34	7.92	3.10	10.03	7.72	3.12	9.73	7.50	3.19	9.42	7.27	3.29	9.10	7.03	3.51	8.70	6.73	3.81
	22°C	27°C	11.04	4.93	3.13	10.65	4.82	3.15	10.26	4.69	3.22	9.85	4.57	3.32	9.42	4.45	3.53	8.90	4.29	3.83
		30°C	11.07	6.05	3.13	10.68	5.92	3.15	10.28	5.79	3.23	9.87	5.66	3.32	9.45	5.53	3.54	8.92	5.36	3.83
		33°C	11.10	7.10	3.14	10.71	6.96	3.16	10.31	6.84	3.23	9.90	6.70	3.32	9.48	6.56	3.54	8.97	6.38	3.84
		36°C	11.17	8.08	3.14	10.79	7.92	3.16	10.42	7.76	3.24	10.05	7.58	3.33	9.67	7.38	3.55	9.22	7.11	3.86
1050	16°C	21°C	9.38	5.27	3.06	9.04	5.13	3.07	8.69	5.00	3.13	8.33	4.85	3.22	7.96	4.71	3.42	7.50	4.52	3.71
		24°C	9.42	6.40	3.06	9.07	6.25	3.07	8.73	6.11	3.13	8.37	5.96	3.22	8.00	5.80	3.42	7.55	5.60	3.71
		27°C	9.53	7.39	3.07	9.22	7.20	3.08	8.91	7.01	3.14	8.59	6.79	3.23	8.27	6.56	3.44	7.88	6.25	3.74
		30°C	10.02	7.92	3.09	9.73	7.69	3.11	9.43	7.46	3.18	9.12	7.22	3.27	8.80	6.97	3.48	8.39	6.65	3.79
	19°C	24°C	10.32	5.25	3.10	9.95	5.12	3.12	9.57	4.98	3.18	9.19	4.85	3.27	8.78	4.71	3.48	8.28	4.53	3.78
		27°C	10.36	6.40	3.10	9.98	6.26	3.12	9.60	6.12	3.19	9.22	5.97	3.27	8.81	5.83	3.48	8.31	5.64	3.78
		30°C	10.40	7.49	3.11	10.03	7.33	3.12	9.67	7.18	3.19	9.29	7.01	3.28	8.91	6.83	3.49	8.45	6.59	3.79
		33°C	10.61	8.35	3.12	10.29	8.13	3.14	9.98	7.90	3.21	9.66	7.65	3.31	9.33	7.39	3.53	8.91	7.07	3.83
	22°C	27°C	11.33	5.20	3.15	10.92	5.07	3.17	10.52	4.94	3.24	10.10	4.81	3.34	9.66	4.67	3.55	9.12	4.51	3.85
		30°C	11.36	6.38	3.15	10.95	6.24	3.17	10.54	6.10	3.24	10.12	5.96	3.34	9.69	5.81	3.55	9.15	5.64	3.85
		33°C	11.39	7.48	3.15	10.98	7.34	3.17	10.57	7.20	3.25	10.15	7.05	3.34	9.72	6.90	3.56	9.19	6.71	3.86
		36°C	11.46	8.51	3.15	11.07	8.34	3.18	10.69	8.17	3.25	10.30	7.98	3.35	9.92	7.76	3.57	9.45	7.47	3.88
1160	16°C	21°C	9.55	5.46	3.07	9.20	5.32	3.08	8.85	5.18	3.14	8.48	5.03	3.23	8.10	4.88	3.43	7.63	4.68	3.72
		24°C	9.59	6.63	3.08	9.23	6.48	3.08	8.88	6.33	3.15	8.52	6.17	3.23	8.15	6.01	3.44	7.68	5.80	3.73
		27°C	9.70	7.66	3.08	9.38	7.47	3.09	9.07	7.26	3.16	8.74	7.04	3.25	8.42	6.79	3.46	8.02	6.47	3.76
		30°C	10.20	8.22	3.10	9.90	7.98	3.12	9.60	7.73	3.19	9.28	7.48	3.28	8.95	7.22	3.50	8.54	6.89	3.80
	19°C	24°C	10.51	5.44	3.11	10.13	5.31	3.13	9.74	5.17	3.20	9.35	5.02	3.28	8.94	4.87	3.49	8.43	4.69	3.79
		27°C	10.54	6.64	3.12	10.16	6.49	3.13	9.78	6.34	3.20	9.38	6.19	3.29	8.97	6.03	3.50	8.46	5.84	3.79
		30°C	10.59	7.77	3.12	10.21	7.61	3.13	9.84	7.44	3.20	9.46	7.26	3.29	9.07	7.07	3.50	8.60	6.82	3.80
		33°C	10.80	8.66	3.13	10.48	8.43	3.15	10.16	8.19	3.22	9.83	7.93	3.32	9.50	7.65	3.54	9.07	7.31	3.85
	22°C	27°C	11.53	5.39	3.16	11.12	5.26	3.18	10.70	5.12	3.25	10.28	4.98	3.35	9.83	4.84	3.56	9.28	4.66	3.86
		30°C	11.56	6.61	3.16	11.15	6.47	3.18	10.73	6.32	3.26	10.30	6.17	3.35	9.86	6.02	3.57	9.31	5.83	3.87
		33°C	11.59	7.76	3.16	11.18	7.61	3.18	10.76	7.46	3.26	10.33	7.31	3.35	9.90	7.15	3.57	9.36	6.94	3.87
		36°C	11.67	8.83	3.17	11.27	8.65	3.19	10.88	8.47	3.27	10.48	8.27	3.36	10.09	8.04	3.59	9.62	7.73	3.90
1280	16°C	21°C	9.66	5.60	3.08	9.31	5.45	3.09	8.95	5.30	3.15	8.58	5.15	3.23	8.20	4.99	3.44	7.72	4.79	3.73
		24°C	9.70	6.80	3.08	9.34	6.64	3.09	8.99	6.48	3.15	8.62	6.32	3.24	8.24	6.15	3.44	7.77	5.93	3.73
		27°C	9.82	7.85	3.09	9.49	7.65	3.10	9.17	7.44	3.16	8.85	7.21	3.25	8.52	6.95	3.46	8.12	6.61	3.76
		30°C	10.32	8.42	3.11	10.02	8.17	3.12	9.71	7.92	3.19	9.39	7.66	3.29	9.06	7.39	3.50	8.64	7.04	3.81
	19°C	24°C	10.63	5.58	3.12	10.25	5.43	3.14	9.86	5.29	3.20	9.46	5.14	3.29	9.04	4.99	3.50	8.53	4.80	3.80
		27°C	10.67	6.81	3.12	10.28	6.65	3.14	9.89	6.50	3.20	9.49	6.34	3.29	9.07	6.17	3.51	8.56	5.97	3.80
		30°C	10.71	7.96	3.12	10.33	7.79	3.14	9.95	7.62	3.21	9.57	7.43	3.30	9.18	7.24	3.51	8.70	6.97	3.81
		33°C	10.93	8.87	3.13	10.60	8.64	3.15	10.28	8.38	3.23	9.95	8.11	3.33	9.61	7.83	3.55	9.18	7.48	3.86
	22°C	27°C	11.67	5.53	3.17	11.25	5.39	3.19	10.83	5.25	3.26	10.40	5.10	3.36	9.95	4.95	3.57	9.39	4.77	3.87
		30°C	11.70	6.78	3.17	11.28	6.62	3.19	10.85	6.47	3.26	10.42	6.32	3.36	9.97	6.16	3.57	9.42	5.97	3.88
		33°C	11.73	7.95	3.17	11.31	7.79	3.19	10.89	7.64	3.27	10.45	7.48	3.36	10.01	7.31	3.58	9.47	7.10	3.88
		36°C	11.81	9.04	3.17	11.40	8.86	3.20	11.00	8.67	3.27	10.61	8.46	3.37	10.21	8.23	3.59	9.73	7.91	3.91

Model: A5CC38C - A5LC~~35C~~ (3 Phase)
Cooling Mode 35D

AFR (CFM)	EWB	EDB	Outdoor temperature																	
			19°C			25°C			30°C			35°C			40°C			46°C		
			TC	SHC	PI	TC	SHC	PI	TC	SHC	PI	TC	SHC	PI	TC	SHC	PI	TC	SHC	PI
920	16°C	21°C	9.42	5.15	3.18	9.08	5.02	3.19	8.74	4.89	3.25	8.38	4.76	3.34	8.00	4.62	3.55	7.54	4.44	3.85
		24°C	9.46	6.26	3.18	9.12	6.12	3.19	8.77	5.98	3.25	8.42	5.84	3.34	8.05	5.69	3.55	7.59	5.50	3.85
		27°C	9.58	7.23	3.18	9.26	7.05	3.19	8.96	6.86	3.26	8.64	6.66	3.35	8.32	6.43	3.57	7.93	6.13	3.88
		30°C	10.07	7.75	3.20	9.78	7.53	3.22	9.48	7.31	3.29	9.17	7.07	3.39	8.85	6.83	3.61	8.44	6.53	3.93
	19°C	24°C	10.37	5.14	3.22	10.00	5.01	3.23	9.62	4.88	3.30	9.24	4.75	3.39	8.83	4.61	3.61	8.33	4.45	3.92
		27°C	10.40	6.26	3.22	10.03	6.13	3.23	9.66	5.99	3.30	9.27	5.85	3.40	8.86	5.71	3.61	8.36	5.54	3.92
		30°C	10.45	7.33	3.22	10.08	7.18	3.24	9.72	7.03	3.31	9.35	6.87	3.40	8.96	6.69	3.62	8.50	6.46	3.93
		33°C	10.66	8.17	3.23	10.34	7.96	3.25	10.04	7.73	3.33	9.72	7.49	3.43	9.38	7.25	3.66	8.96	6.93	3.98
	22°C	27°C	11.38	5.09	3.27	10.98	4.96	3.29	10.57	4.84	3.36	10.15	4.71	3.46	9.72	4.58	3.68	9.17	4.42	3.99
		30°C	11.41	6.24	3.27	11.01	6.10	3.29	10.60	5.97	3.36	10.18	5.84	3.46	9.74	5.70	3.69	9.20	5.53	4.00
		33°C	11.44	7.32	3.27	11.04	7.18	3.29	10.63	7.05	3.37	10.21	6.91	3.47	9.78	6.77	3.69	9.24	6.58	4.00
		36°C	11.52	8.32	3.27	11.13	8.16	3.30	10.74	8.00	3.37	10.36	7.82	3.48	9.97	7.61	3.71	9.51	7.33	4.03
1050	16°C	21°C	9.67	5.43	3.19	9.32	5.29	3.20	8.96	5.15	3.27	8.59	5.00	3.35	8.21	4.85	3.57	7.73	4.66	3.87
		24°C	9.71	6.59	3.19	9.35	6.44	3.20	9.00	6.30	3.27	8.63	6.14	3.36	8.25	5.98	3.57	7.78	5.77	3.87
		27°C	9.82	7.62	3.20	9.50	7.43	3.21	9.18	7.22	3.28	8.86	7.00	3.37	8.53	6.76	3.59	8.13	6.44	3.90
		30°C	10.33	8.17	3.22	10.03	7.93	3.24	9.72	7.69	3.31	9.40	7.44	3.41	9.07	7.18	3.63	8.65	6.86	3.95
	19°C	24°C	10.64	5.41	3.23	10.26	5.27	3.25	9.87	5.14	3.32	9.47	5.00	3.41	9.05	4.85	3.63	8.54	4.67	3.94
		27°C	10.68	6.60	3.24	10.29	6.45	3.25	9.90	6.31	3.32	9.50	6.16	3.41	9.08	6.01	3.63	8.57	5.82	3.94
		30°C	10.72	7.72	3.24	10.34	7.56	3.25	9.96	7.40	3.32	9.58	7.22	3.42	9.19	7.04	3.64	8.71	6.79	3.95
		33°C	10.94	8.61	3.25	10.61	8.38	3.27	10.29	8.14	3.35	9.96	7.88	3.45	9.62	7.62	3.68	9.19	7.28	4.00
	22°C	27°C	11.68	5.36	3.28	11.26	5.23	3.30	10.84	5.10	3.38	10.41	4.96	3.48	9.96	4.82	3.70	9.40	4.65	4.02
		30°C	11.71	6.57	3.28	11.29	6.43	3.31	10.87	6.29	3.38	10.43	6.14	3.48	9.99	5.99	3.71	9.43	5.81	4.02
		33°C	11.74	7.71	3.29	11.32	7.56	3.31	10.90	7.42	3.38	10.47	7.27	3.48	10.02	7.11	3.71	9.48	6.91	4.02
		36°C	11.82	8.77	3.29	11.41	8.60	3.31	11.02	8.42	3.39	10.62	8.23	3.49	10.22	8.00	3.73	9.75	7.70	4.05
1160	16°C	21°C	9.84	5.63	3.20	9.48	5.49	3.21	9.12	5.34	3.28	8.74	5.19	3.37	8.35	5.03	3.58	7.86	4.83	3.88
		24°C	9.89	6.84	3.21	9.52	6.68	3.22	9.16	6.53	3.28	8.78	6.37	3.37	8.40	6.20	3.58	7.92	5.98	3.89
		27°C	10.00	7.90	3.21	9.67	7.70	3.22	9.35	7.49	3.29	9.01	7.26	3.38	8.68	7.00	3.60	8.27	6.67	3.92
		30°C	10.52	8.47	3.23	10.21	8.22	3.25	9.89	7.97	3.32	9.57	7.71	3.42	9.23	7.44	3.65	8.81	7.10	3.96
	19°C	24°C	10.83	5.61	3.25	10.44	5.47	3.26	10.04	5.32	3.33	9.64	5.18	3.42	9.21	5.02	3.64	8.69	4.84	3.95
		27°C	10.87	6.85	3.25	10.47	6.69	3.26	10.08	6.54	3.33	9.67	6.38	3.43	9.25	6.22	3.65	8.72	6.02	3.95
		30°C	10.92	8.01	3.25	10.52	7.84	3.27	10.14	7.67	3.34	9.75	7.49	3.43	9.35	7.29	3.65	8.86	7.03	3.97
		33°C	11.14	8.93	3.26	10.80	8.69	3.28	10.47	8.44	3.36	10.14	8.17	3.46	9.79	7.89	3.69	9.35	7.54	4.01
	22°C	27°C	11.89	5.56	3.29	11.46	5.42	3.32	11.03	5.28	3.39	10.59	5.14	3.49	10.14	4.99	3.72	9.57	4.81	4.03
		30°C	11.92	6.82	3.30	11.49	6.67	3.32	11.06	6.52	3.39	10.62	6.36	3.49	10.16	6.21	3.72	9.60	6.01	4.03
		33°C	11.95	8.00	3.30	11.52	7.84	3.32	11.09	7.69	3.40	10.65	7.53	3.50	10.20	7.37	3.72	9.64	7.15	4.04
		36°C	12.03	9.10	3.30	11.62	8.92	3.33	11.21	8.73	3.40	10.81	8.52	3.51	10.40	8.29	3.74	9.92	7.97	4.06
1280	16°C	21°C	9.96	5.77	3.21	9.59	5.62	3.22	9.23	5.47	3.29	8.85	5.31	3.37	8.45	5.15	3.59	7.96	4.94	3.89
		24°C	10.00	7.01	3.21	9.63	6.85	3.22	9.26	6.69	3.29	8.89	6.52	3.38	8.49	6.34	3.59	8.01	6.11	3.89
		27°C	10.12	8.10	3.22	9.79	7.89	3.23	9.46	7.67	3.30	9.12	7.43	3.39	8.78	7.16	3.61	8.37	6.82	3.92
		30°C	10.64	8.68	3.24	10.33	8.42	3.26	10.01	8.17	3.33	9.68	7.90	3.43	9.34	7.61	3.65	8.91	7.26	3.97
	19°C	24°C	10.96	5.75	3.25	10.56	5.60	3.27	10.16	5.45	3.34	9.75	5.30	3.43	9.32	5.14	3.65	8.79	4.95	3.96
		27°C	11.00	7.02	3.26	10.60	6.86	3.27	10.20	6.70	3.34	9.78	6.53	3.43	9.35	6.37	3.65	8.82	6.16	3.96
		30°C	11.04	8.20	3.26	10.65	8.03	3.27	10.26	7.86	3.34	9.87	7.66	3.44	9.46	7.46	3.66	8.97	7.19	3.97
		33°C	11.27	9.15	3.27	10.93	8.91	3.29	10.60	8.64	3.37	10.26	8.36	3.47	9.90	8.07	3.70	9.46	7.71	4.02
	22°C	27°C	12.03	5.70	3.30	11.60	5.55	3.32	11.16	5.41	3.40	10.72	5.26	3.50	10.26	5.11	3.72	9.68	4.92	4.04
		30°C	12.06	6.99	3.30	11.63	6.83	3.33	11.19	6.67	3.40	10.75	6.51	3.50	10.28	6.35	3.73	9.71	6.15	4.04
		33°C	12.09	8.19	3.30	11.66	8.03	3.33	11.22	7.88	3.40	10.78	7.71	3.50	10.32	7.54	3.73	9.76	7.32	4.05
		36°C	12.17	9.32	3.31	11.75	9.13	3.33	11.35	8.94	3.41	10.94	8.72	3.52	10.53	8.48	3.75	10.03	8.15	4.07

Remark:
AFR: Air flow rate (CFM)
EWB: Entering Wet Bulb Temp. (˚C)
EDB: Entering Dry Bulb Temp. (˚C)

TC: Total Cooling Capacity (kW)
SHC: Sensible Heat Capacity (kW)
PI: Power Input

Notes:
1. Ratings shown are gross capacities which do not include a deduction for indoor fan motor heat.
2. shows nominal capacities.
3. Direct interpolation is permissible. Do not extrapolate.

Model: A5CC38C - A5LC~~40C~~ 40D
Cooling Mode

AFR (CFM)	EWB	EDB	Outdoor temperature																	
			19°C			25°C			30°C			35°C			40°C			46°C		
			TC	SHC	PI	TC	SHC	PI	TC	SHC	PI	TC	SHC	PI	TC	SHC	PI	TC	SHC	PI
920	16°C	21°C	11.14	6.09	3.97	10.73	5.94	3.98	10.33	5.78	4.06	9.90	5.62	4.17	9.46	5.46	4.44	8.91	5.25	4.81
		24°C	11.19	7.40	3.98	10.78	7.23	3.99	10.37	7.07	4.07	9.95	6.90	4.18	9.51	6.73	4.44	8.97	6.50	4.82
		27°C	11.32	8.54	3.98	10.95	8.33	4.00	10.58	8.11	4.08	10.21	7.87	4.19	9.84	7.60	4.47	9.37	7.25	4.86
		30°C	11.90	9.16	4.01	11.56	8.90	4.03	11.21	8.64	4.12	10.84	8.36	4.24	10.46	8.08	4.52	9.98	7.72	4.91
	19°C	24°C	12.26	6.07	4.03	11.82	5.92	4.04	11.38	5.77	4.13	10.92	5.61	4.25	10.44	5.45	4.52	9.84	5.26	4.90
		27°C	12.30	7.40	4.03	11.86	7.24	4.05	11.41	7.08	4.13	10.95	6.92	4.25	10.47	6.75	4.52	9.88	6.55	4.90
		30°C	12.35	8.66	4.03	11.91	8.48	4.05	11.49	8.31	4.14	11.05	8.12	4.26	10.59	7.91	4.53	10.04	7.64	4.92
		33°C	12.60	9.65	4.04	12.23	9.41	4.07	11.86	9.14	4.16	11.48	8.86	4.29	11.09	8.56	4.57	10.60	8.19	4.98
	22°C	27°C	13.45	6.01	4.09	12.98	5.87	4.11	12.50	5.72	4.21	12.00	5.57	4.33	11.48	5.42	4.61	10.84	5.23	5.00
		30°C	13.49	7.37	4.09	13.01	7.22	4.11	12.53	7.06	4.21	12.03	6.90	4.33	11.51	6.74	4.61	10.87	6.54	5.00
		33°C	13.53	8.65	4.09	13.05	8.49	4.12	12.56	8.33	4.21	12.06	8.17	4.34	11.56	8.00	4.62	10.93	7.78	5.01
		36°C	13.61	9.84	4.09	13.15	9.65	4.12	12.70	9.46	4.22	12.24	9.24	4.35	11.79	9.00	4.64	11.24	8.66	5.04
1050	16°C	21°C	11.43	6.42	3.99	11.01	6.25	4.01	10.59	6.09	4.08	10.15	5.92	4.19	9.70	5.74	4.46	9.13	5.51	4.84
		24°C	11.48	7.79	4.00	11.05	7.62	4.01	10.63	7.44	4.09	10.20	7.26	4.20	9.75	7.07	4.47	9.20	6.83	4.84
		27°C	11.61	9.00	4.00	11.23	8.78	4.02	10.85	8.54	4.10	10.47	8.28	4.22	10.08	7.99	4.49	9.61	7.61	4.88
		30°C	12.21	9.65	4.03	11.85	9.37	4.05	11.49	9.09	4.14	11.12	8.80	4.26	10.72	8.49	4.54	10.23	8.11	4.94
	19°C	24°C	12.58	6.40	4.05	12.12	6.23	4.06	11.66	6.07	4.15	11.19	5.91	4.27	10.70	5.73	4.54	10.09	5.52	4.93
		27°C	12.62	7.80	4.05	12.16	7.63	4.07	11.70	7.46	4.15	11.23	7.28	4.27	10.74	7.10	4.55	10.13	6.88	4.93
		30°C	12.67	9.12	4.05	12.22	8.94	4.07	11.78	8.75	4.16	11.33	8.54	4.28	10.86	8.32	4.55	10.29	8.02	4.94
		33°C	12.93	10.17	4.06	12.54	9.91	4.09	12.16	9.62	4.19	11.78	9.32	4.31	11.37	9.01	4.60	10.86	8.61	5.00
	22°C	27°C	13.80	6.33	4.11	13.31	6.18	4.13	12.81	6.02	4.23	12.30	5.86	4.35	11.77	5.70	4.63	11.12	5.49	5.02
		30°C	13.84	7.77	4.11	13.34	7.60	4.14	12.85	7.43	4.23	12.33	7.26	4.35	11.80	7.08	4.64	11.15	6.87	5.03
		33°C	13.88	9.11	4.11	13.38	8.94	4.14	12.88	8.77	4.23	12.37	8.59	4.36	11.85	8.41	4.64	11.20	8.17	5.03
		36°C	13.97	10.37	4.11	13.49	10.16	4.14	13.02	9.95	4.24	12.55	9.72	4.37	12.08	9.46	4.66	11.52	9.10	5.07
1160	16°C	21°C	11.64	6.66	4.01	11.21	6.48	4.02	10.78	6.31	4.10	10.33	6.13	4.21	9.87	5.94	4.48	9.29	5.70	4.86
		24°C	11.68	8.08	4.01	11.25	7.90	4.02	10.82	7.72	4.10	10.38	7.52	4.21	9.93	7.32	4.48	9.36	7.06	4.86
		27°C	11.82	9.34	4.02	11.43	9.10	4.03	11.05	8.85	4.12	10.65	8.58	4.23	10.26	8.27	4.51	9.77	7.88	4.90
		30°C	12.43	10.01	4.04	12.06	9.72	4.07	11.70	9.42	4.16	11.31	9.12	4.28	10.91	8.79	4.56	10.41	8.39	4.96
	19°C	24°C	12.80	6.63	4.06	12.34	6.46	4.08	11.87	6.29	4.17	11.39	6.12	4.28	10.89	5.94	4.56	10.27	5.72	4.94
		27°C	12.85	8.09	4.06	12.38	7.91	4.08	11.91	7.73	4.17	11.43	7.54	4.29	10.93	7.35	4.56	10.31	7.12	4.95
		30°C	12.90	9.46	4.07	12.44	9.27	4.09	11.99	9.07	4.17	11.53	8.85	4.29	11.05	8.62	4.57	10.48	8.30	4.96
		33°C	13.17	10.55	4.08	12.77	10.28	4.10	12.38	9.98	4.20	11.98	9.66	4.33	11.57	9.33	4.62	11.05	8.91	5.02
	22°C	27°C	14.05	6.57	4.12	13.55	6.41	4.15	13.04	6.24	4.24	12.52	6.07	4.37	11.98	5.90	4.65	11.31	5.68	5.04
		30°C	14.09	8.06	4.12	13.58	7.88	4.15	13.07	7.70	4.25	12.55	7.52	4.37	12.01	7.34	4.65	11.34	7.11	5.04
		33°C	14.13	9.45	4.12	13.62	9.27	4.15	13.11	9.09	4.25	12.59	8.90	4.37	12.06	8.71	4.66	11.40	8.46	5.05
		36°C	14.22	10.76	4.13	13.73	10.54	4.16	13.26	10.32	4.26	12.78	10.07	4.39	12.30	9.80	4.68	11.72	9.42	5.08
1280	16°C	21°C	11.77	6.82	4.02	11.34	6.64	4.03	10.90	6.46	4.11	10.45	6.28	4.22	9.99	6.08	4.49	9.40	5.83	4.87
		24°C	11.82	8.28	4.02	11.38	8.09	4.03	10.95	7.90	4.11	10.50	7.70	4.22	10.04	7.49	4.49	9.47	7.22	4.87
		27°C	11.96	9.57	4.03	11.57	9.32	4.04	11.18	9.07	4.13	10.78	8.78	4.24	10.38	8.47	4.52	9.89	8.06	4.91
		30°C	12.57	10.26	4.05	12.21	9.96	4.07	11.83	9.65	4.17	11.45	9.33	4.29	11.04	9.00	4.57	10.53	8.58	4.97
	19°C	24°C	12.95	6.80	4.07	12.48	6.62	4.09	12.01	6.45	4.18	11.53	6.26	4.29	11.02	6.08	4.57	10.39	5.85	4.95
		27°C	13.00	8.29	4.07	12.52	8.10	4.09	12.05	7.92	4.18	11.57	7.72	4.30	11.06	7.52	4.57	10.43	7.28	4.96
		30°C	13.05	9.70	4.07	12.58	9.49	4.10	12.13	9.29	4.18	11.66	9.06	4.30	11.18	8.82	4.58	10.60	8.49	4.97
		33°C	13.32	10.81	4.09	12.92	10.53	4.11	12.52	10.22	4.21	12.13	9.89	4.34	11.71	9.54	4.63	11.19	9.11	5.03
	22°C	27°C	14.22	6.73	4.13	13.71	6.57	4.16	13.19	6.39	4.25	12.67	6.22	4.38	12.12	6.04	4.66	11.45	5.81	5.05
		30°C	14.25	8.26	4.13	13.74	8.07	4.16	13.23	7.89	4.26	12.70	7.70	4.38	12.15	7.51	4.66	11.48	7.27	5.06
		33°C	14.29	9.68	4.13	13.78	9.50	4.16	13.26	9.31	4.26	12.74	9.11	4.38	12.20	8.91	4.67	11.54	8.65	5.06
		36°C	14.39	11.02	4.14	13.89	10.80	4.17	13.41	10.57	4.27	12.93	10.31	4.40	12.44	10.02	4.69	11.86	9.63	5.09

Model: A5CC38C - A5LC~~40C~~ (3 Phase)
Cooling Mode
40D

AFR (CFM)	EWB	EDB	Outdoor temperature																	
			19°C			25°C			30°C			35°C			40°C			46°C		
			TC	SHC	PI	TC	SHC	PI	TC	SHC	PI	TC	SHC	PI	TC	SHC	PI	TC	SHC	PI
920	16°C	21°C	11.14	6.09	3.97	10.73	5.94	3.98	10.33	5.78	4.06	9.90	5.62	4.17	9.46	5.46	4.44	8.91	5.25	4.81
		24°C	11.19	7.40	3.98	10.78	7.23	3.99	10.37	7.07	4.07	9.95	6.90	4.18	9.51	6.73	4.44	8.97	6.50	4.82
		27°C	11.32	8.54	3.98	10.95	8.33	4.00	10.58	8.11	4.08	10.21	7.87	4.19	9.84	7.60	4.47	9.37	7.25	4.86
		30°C	11.90	9.16	4.01	11.56	8.90	4.03	11.21	8.64	4.12	10.84	8.36	4.24	10.46	8.08	4.52	9.98	7.72	4.91
	19°C	24°C	12.26	6.07	4.03	11.82	5.92	4.04	11.38	5.77	4.13	10.92	5.61	4.25	10.44	5.45	4.52	9.84	5.26	4.90
		27°C	12.30	7.40	4.03	11.86	7.24	4.05	11.41	7.08	4.13	10.95	6.92	4.25	10.47	6.75	4.52	9.88	6.55	4.90
		30°C	12.35	8.66	4.03	11.91	8.48	4.05	11.49	8.31	4.14	11.05	8.12	4.26	10.59	7.91	4.53	10.04	7.64	4.92
		33°C	12.60	9.65	4.04	12.23	9.41	4.07	11.86	9.14	4.16	11.48	8.86	4.29	11.09	8.56	4.57	10.60	8.19	4.98
	22°C	27°C	13.45	6.01	4.09	12.98	5.87	4.11	12.50	5.72	4.21	12.00	5.57	4.33	11.48	5.42	4.61	10.84	5.23	5.00
		30°C	13.49	7.37	4.09	13.01	7.22	4.11	12.53	7.06	4.21	12.03	6.90	4.33	11.51	6.74	4.61	10.87	6.54	5.00
		33°C	13.53	8.65	4.09	13.05	8.49	4.12	12.56	8.33	4.21	12.06	8.17	4.34	11.56	8.00	4.62	10.93	7.78	5.01
		36°C	13.61	9.84	4.09	13.15	9.65	4.12	12.70	9.46	4.22	12.24	9.24	4.35	11.79	9.00	4.64	11.24	8.66	5.04
1050	16°C	21°C	11.43	6.42	3.99	11.01	6.25	4.01	10.59	6.09	4.08	10.15	5.92	4.19	9.70	5.74	4.46	9.13	5.51	4.84
		24°C	11.48	7.79	4.00	11.05	7.62	4.01	10.63	7.44	4.09	10.20	7.26	4.20	9.75	7.07	4.47	9.20	6.83	4.84
		27°C	11.61	9.00	4.00	11.23	8.78	4.02	10.85	8.54	4.10	10.47	8.28	4.22	10.08	7.99	4.49	9.61	7.61	4.88
		30°C	12.21	9.65	4.03	11.85	9.37	4.05	11.49	9.09	4.14	11.12	8.80	4.26	10.72	8.49	4.54	10.23	8.11	4.94
	19°C	24°C	12.58	6.40	4.05	12.12	6.23	4.06	11.66	6.07	4.15	11.19	5.91	4.27	10.70	5.73	4.54	10.09	5.52	4.93
		27°C	12.62	7.80	4.05	12.16	7.63	4.07	11.70	7.46	4.15	11.23	7.28	4.27	10.74	7.10	4.55	10.13	6.88	4.93
		30°C	12.67	9.12	4.05	12.22	8.94	4.07	11.78	8.75	4.16	11.33	8.54	4.28	10.86	8.32	4.55	10.29	8.02	4.94
		33°C	12.93	10.17	4.06	12.54	9.91	4.09	12.16	9.62	4.19	11.78	9.32	4.31	11.37	9.01	4.60	10.86	8.61	5.00
	22°C	27°C	13.80	6.33	4.11	13.31	6.18	4.13	12.81	6.02	4.23	12.30	5.86	4.35	11.77	5.70	4.63	11.12	5.49	5.02
		30°C	13.84	7.77	4.11	13.34	7.60	4.14	12.85	7.43	4.23	12.33	7.26	4.35	11.80	7.08	4.64	11.15	6.87	5.03
		33°C	13.88	9.11	4.11	13.38	8.94	4.14	12.88	8.77	4.23	12.37	8.59	4.36	11.85	8.41	4.64	11.20	8.17	5.03
		36°C	13.97	10.37	4.11	13.49	10.16	4.14	13.02	9.95	4.24	12.55	9.72	4.37	12.08	9.46	4.66	11.52	9.10	5.07
1160	16°C	21°C	11.64	6.66	4.01	11.21	6.48	4.02	10.78	6.31	4.10	10.33	6.13	4.21	9.87	5.94	4.48	9.29	5.70	4.86
		24°C	11.68	8.08	4.01	11.25	7.90	4.02	10.82	7.72	4.10	10.38	7.52	4.21	9.93	7.32	4.48	9.36	7.06	4.86
		27°C	11.82	9.34	4.02	11.43	9.10	4.03	11.05	8.85	4.12	10.65	8.58	4.23	10.26	8.27	4.51	9.77	7.88	4.90
		30°C	12.43	10.01	4.04	12.06	9.72	4.07	11.70	9.42	4.16	11.31	9.12	4.28	10.91	8.79	4.56	10.41	8.39	4.96
	19°C	24°C	12.80	6.63	4.06	12.34	6.46	4.08	11.87	6.29	4.17	11.39	6.12	4.28	10.89	5.94	4.56	10.27	5.72	4.94
		27°C	12.85	8.09	4.06	12.38	7.91	4.08	11.91	7.73	4.17	11.43	7.54	4.29	10.93	7.35	4.56	10.31	7.12	4.95
		30°C	12.90	9.46	4.07	12.44	9.27	4.09	11.99	9.07	4.17	11.53	8.85	4.29	11.05	8.62	4.57	10.48	8.30	4.96
		33°C	13.17	10.55	4.08	12.77	10.28	4.10	12.38	9.98	4.20	11.98	9.66	4.33	11.57	9.33	4.62	11.05	8.91	5.02
	22°C	27°C	14.05	6.57	4.12	13.55	6.41	4.15	13.04	6.24	4.24	12.52	6.07	4.37	11.98	5.90	4.65	11.31	5.68	5.04
		30°C	14.09	8.06	4.12	13.58	7.88	4.15	13.07	7.70	4.25	12.55	7.52	4.37	12.01	7.34	4.65	11.34	7.11	5.04
		33°C	14.13	9.45	4.12	13.62	9.27	4.15	13.11	9.09	4.25	12.59	8.90	4.37	12.06	8.71	4.66	11.40	8.46	5.05
		36°C	14.22	10.76	4.13	13.73	10.54	4.16	13.26	10.32	4.26	12.78	10.07	4.39	12.30	9.80	4.68	11.72	9.42	5.08
1280	16°C	21°C	11.77	6.82	4.02	11.34	6.64	4.03	10.90	6.46	4.11	10.45	6.28	4.22	9.99	6.08	4.49	9.40	5.83	4.87
		24°C	11.82	8.28	4.02	11.38	8.09	4.03	10.95	7.90	4.11	10.50	7.70	4.22	10.04	7.49	4.49	9.47	7.22	4.87
		27°C	11.96	9.57	4.03	11.57	9.32	4.04	11.18	9.07	4.13	10.78	8.78	4.24	10.38	8.47	4.52	9.89	8.06	4.91
		30°C	12.57	10.26	4.05	12.21	9.96	4.07	11.83	9.65	4.17	11.45	9.33	4.29	11.04	9.00	4.57	10.53	8.58	4.97
	19°C	24°C	12.95	6.80	4.07	12.48	6.62	4.09	12.01	6.45	4.18	11.53	6.26	4.29	11.02	6.08	4.57	10.39	5.85	4.95
		27°C	13.00	8.29	4.07	12.52	8.10	4.09	12.05	7.92	4.18	11.57	7.72	4.30	11.06	7.52	4.57	10.43	7.28	4.96
		30°C	13.05	9.70	4.07	12.58	9.49	4.10	12.13	9.29	4.18	11.66	9.06	4.30	11.18	8.82	4.58	10.60	8.49	4.97
		33°C	13.32	10.81	4.09	12.92	10.53	4.11	12.52	10.22	4.21	12.13	9.89	4.34	11.71	9.54	4.63	11.19	9.11	5.03
	22°C	27°C	14.22	6.73	4.13	13.71	6.57	4.16	13.19	6.39	4.25	12.67	6.22	4.38	12.12	6.04	4.66	11.45	5.81	5.05
		30°C	14.25	8.26	4.13	13.74	8.07	4.16	13.23	7.89	4.26	12.70	7.70	4.38	12.15	7.51	4.66	11.48	7.27	5.06
		33°C	14.29	9.68	4.13	13.78	9.50	4.16	13.26	9.31	4.26	12.74	9.11	4.38	12.20	8.91	4.67	11.54	8.65	5.06
		36°C	14.39	11.02	4.14	13.89	10.80	4.17	13.41	10.57	4.27	12.93	10.31	4.40	12.44	10.02	4.69	11.86	9.63	5.09

Remark:
AFR: Air flow rate (CFM)
EWB: Entering Wet Bulb Temp. (˚C)
EDB: Entering Dry Bulb Temp. (˚C)
TC: Total Cooling Capacity (kW)
SHC: Sensible Heat Capacity (kW)
PI: Power Input

Notes:
1. Ratings shown are gross capacities which do not include a deduction for indoor fan motor heat.
2. shows nominal capacities.
3. Direct interpolation is permissible. Do not extrapolate.

A5CC38C - A5LC40D (3 Phase)

Model: ~~A5CC50C - A5LC50C~~

Cooling Mode

AFR (CFM)	EWB	EDB	Outdoor temperature																	
			19°C			25°C			30°C			35°C			40°C			46°C		
			TC	SHC	PI	TC	SHC	PI	TC	SHC	PI	TC	SHC	PI	TC	SHC	PI	TC	SHC	PI
920	16°C	21°C	11.14	6.09	3.97	10.73	5.94	3.98	10.33	5.78	4.06	9.90	5.62	4.17	9.46	5.46	4.44	8.91	5.25	4.81
		24°C	11.19	7.40	3.98	10.78	7.23	3.99	10.37	7.07	4.07	9.95	6.90	4.18	9.51	6.73	4.44	8.97	6.50	4.82
		27°C	11.32	8.54	3.98	10.95	8.33	4.00	10.58	8.11	4.08	10.21	7.87	4.19	9.84	7.60	4.47	9.37	7.25	4.86
		30°C	11.90	9.16	4.01	11.56	8.90	4.03	11.21	8.64	4.12	10.84	8.36	4.24	10.46	8.08	4.52	9.98	7.72	4.91
	19°C	24°C	12.26	6.07	4.03	11.82	5.92	4.04	11.38	5.77	4.13	10.92	5.61	4.25	10.44	5.45	4.52	9.84	5.26	4.90
		27°C	12.30	7.40	4.03	11.86	7.24	4.05	11.41	7.08	4.13	10.95	6.92	4.25	10.47	6.75	4.52	9.88	6.55	4.90
		30°C	12.35	8.66	4.03	11.91	8.48	4.05	11.49	8.31	4.14	11.05	8.12	4.26	10.59	7.91	4.53	10.04	7.64	4.92
		33°C	12.60	9.65	4.04	12.23	9.41	4.07	11.86	9.14	4.16	11.48	8.86	4.29	11.09	8.56	4.57	10.60	8.19	4.98
	22°C	27°C	13.45	6.01	4.09	12.98	5.87	4.11	12.50	5.72	4.21	12.00	5.57	4.33	11.48	5.42	4.61	10.84	5.23	5.00
		30°C	13.49	7.37	4.09	13.01	7.22	4.11	12.53	7.06	4.21	12.03	6.90	4.33	11.51	6.74	4.61	10.87	6.54	5.00
		33°C	13.53	8.65	4.09	13.05	8.49	4.12	12.56	8.33	4.21	12.06	8.17	4.34	11.56	8.00	4.62	10.93	7.78	5.01
		36°C	13.61	9.84	4.09	13.15	9.65	4.12	12.70	9.46	4.22	12.24	9.24	4.35	11.79	9.00	4.64	11.24	8.66	5.04
1050	16°C	21°C	11.43	6.42	3.99	11.01	6.25	4.01	10.59	6.09	4.08	10.15	5.92	4.19	9.70	5.74	4.46	9.13	5.51	4.84
		24°C	11.48	7.79	4.00	11.05	7.62	4.01	10.63	7.44	4.09	10.20	7.26	4.20	9.75	7.07	4.47	9.20	6.83	4.84
		27°C	11.61	9.00	4.00	11.23	8.78	4.02	10.85	8.54	4.10	10.47	8.28	4.22	10.08	7.99	4.49	9.61	7.61	4.88
		30°C	12.21	9.65	4.03	11.85	9.37	4.05	11.49	9.09	4.14	11.12	8.80	4.26	10.72	8.49	4.54	10.23	8.11	4.94
	19°C	24°C	12.58	6.40	4.05	12.12	6.23	4.06	11.66	6.07	4.15	11.19	5.91	4.27	10.70	5.73	4.54	10.09	5.52	4.93
		27°C	12.62	7.80	4.05	12.16	7.63	4.07	11.70	7.46	4.15	11.23	7.28	4.27	10.74	7.10	4.55	10.13	6.88	4.93
		30°C	12.67	9.12	4.05	12.22	8.94	4.07	11.78	8.75	4.16	11.33	8.54	4.28	10.86	8.32	4.55	10.29	8.02	4.94
		33°C	12.93	10.17	4.06	12.54	9.91	4.09	12.16	9.62	4.19	11.78	9.32	4.31	11.37	9.01	4.60	10.86	8.61	5.00
	22°C	27°C	13.80	6.33	4.11	13.31	6.18	4.13	12.81	6.02	4.23	12.30	5.86	4.35	11.77	5.70	4.63	11.12	5.49	5.02
		30°C	13.84	7.77	4.11	13.34	7.60	4.14	12.85	7.43	4.23	12.33	7.26	4.35	11.80	7.08	4.64	11.15	6.87	5.03
		33°C	13.88	9.11	4.11	13.38	8.94	4.14	12.88	8.77	4.23	12.37	8.59	4.36	11.85	8.41	4.64	11.20	8.17	5.03
		36°C	13.97	10.37	4.11	13.49	10.16	4.14	13.02	9.95	4.24	12.55	9.72	4.37	12.08	9.46	4.66	11.52	9.10	5.07
1160	16°C	21°C	11.64	6.66	4.01	11.21	6.48	4.02	10.78	6.31	4.10	10.33	6.13	4.21	9.87	5.94	4.48	9.29	5.70	4.86
		24°C	11.68	8.08	4.01	11.25	7.90	4.02	10.82	7.72	4.10	10.38	7.52	4.21	9.93	7.32	4.48	9.36	7.06	4.86
		27°C	11.82	9.34	4.02	11.43	9.10	4.03	11.05	8.85	4.12	10.65	8.58	4.23	10.26	8.27	4.51	9.77	7.88	4.90
		30°C	12.43	10.01	4.04	12.06	9.72	4.07	11.70	9.42	4.16	11.31	9.12	4.28	10.91	8.79	4.56	10.41	8.39	4.96
	19°C	24°C	12.80	6.63	4.06	12.34	6.46	4.08	11.87	6.29	4.17	11.39	6.12	4.28	10.89	5.94	4.56	10.27	5.72	4.94
		27°C	12.85	8.09	4.06	12.38	7.91	4.08	11.91	7.73	4.17	11.43	7.54	4.29	10.93	7.35	4.56	10.31	7.12	4.95
		30°C	12.90	9.46	4.07	12.44	9.27	4.09	11.99	9.07	4.17	11.53	8.85	4.29	11.05	8.62	4.57	10.48	8.30	4.96
		33°C	13.17	10.55	4.08	12.77	10.28	4.10	12.38	9.98	4.20	11.98	9.66	4.33	11.57	9.33	4.62	11.05	8.91	5.02
	22°C	27°C	14.05	6.57	4.12	13.55	6.41	4.15	13.04	6.24	4.24	12.52	6.07	4.37	11.98	5.90	4.65	11.31	5.68	5.04
		30°C	14.09	8.06	4.12	13.58	7.88	4.15	13.07	7.70	4.25	12.55	7.52	4.37	12.01	7.34	4.65	11.34	7.11	5.04
		33°C	14.13	9.45	4.12	13.62	9.27	4.15	13.11	9.09	4.25	12.59	8.90	4.37	12.06	8.71	4.66	11.40	8.46	5.05
		36°C	14.22	10.76	4.13	13.73	10.54	4.16	13.26	10.32	4.26	12.78	10.07	4.39	12.30	9.80	4.68	11.72	9.42	5.08
1280	16°C	21°C	11.77	6.82	4.02	11.34	6.64	4.03	10.90	6.46	4.11	10.45	6.28	4.22	9.99	6.08	4.49	9.40	5.83	4.87
		24°C	11.82	8.28	4.02	11.38	8.09	4.03	10.95	7.90	4.11	10.50	7.70	4.22	10.04	7.49	4.49	9.47	7.22	4.87
		27°C	11.96	9.57	4.03	11.57	9.32	4.04	11.18	9.07	4.13	10.78	8.78	4.24	10.38	8.47	4.52	9.89	8.06	4.91
		30°C	12.57	10.26	4.05	12.21	9.96	4.07	11.83	9.65	4.17	11.45	9.33	4.29	11.04	9.00	4.57	10.53	8.58	4.97
	19°C	24°C	12.95	6.80	4.07	12.48	6.62	4.09	12.01	6.45	4.18	11.53	6.26	4.29	11.02	6.08	4.57	10.39	5.85	4.95
		27°C	13.00	8.29	4.07	12.52	8.10	4.09	12.05	7.92	4.18	11.57	7.72	4.30	11.06	7.52	4.57	10.43	7.28	4.96
		30°C	13.05	9.70	4.07	12.58	9.49	4.10	12.13	9.29	4.18	11.66	9.06	4.30	11.18	8.82	4.58	10.60	8.49	4.97
		33°C	13.32	10.81	4.09	12.92	10.53	4.11	12.52	10.22	4.21	12.13	9.89	4.34	11.71	9.54	4.63	11.19	9.11	5.03
	22°C	27°C	14.22	6.73	4.13	13.71	6.57	4.16	13.19	6.39	4.25	12.67	6.22	4.38	12.12	6.04	4.66	11.45	5.81	5.05
		30°C	14.25	8.26	4.13	13.74	8.07	4.16	13.23	7.89	4.26	12.70	7.70	4.38	12.15	7.51	4.66	11.48	7.27	5.06
		33°C	14.29	9.68	4.13	13.78	9.50	4.16	13.26	9.31	4.26	12.74	9.11	4.38	12.20	8.91	4.67	11.54	8.65	5.06
		36°C	14.39	11.02	4.14	13.89	10.80	4.17	13.41	10.57	4.27	12.93	10.31	4.40	12.44	10.02	4.69	11.86	9.63	5.09

Model: ~~A5CC38C - A5LC40C (3 Phase)~~ A5CC50C - A5LC50D

Cooling Mode

AFR (CFM)	EWB	EDB	Outdoor temperature																	
			19°C			25°C			30°C			35°C			40°C			46°C		
			TC	SHC	PI	TC	SHC	PI	TC	SHC	PI	TC	SHC	PI	TC	SHC	PI	TC	SHC	PI
1130	16°C	21°C	12.85	7.46	4.26	12.39	7.27	4.28	11.92	7.08	4.36	11.43	6.88	4.48	10.92	6.68	4.76	10.28	6.42	5.17
		24°C	12.91	9.05	4.27	12.44	8.85	4.28	11.97	8.65	4.36	11.48	8.45	4.48	10.98	8.23	4.77	10.35	7.95	5.17
		27°C	13.06	10.46	4.27	12.64	10.20	4.29	12.21	9.93	4.38	11.78	9.63	4.50	11.35	9.30	4.80	10.81	8.87	5.21
		30°C	13.73	11.21	4.30	13.33	10.89	4.32	12.93	10.57	4.42	12.51	10.23	4.55	12.07	9.88	4.85	11.51	9.44	5.27
	19°C	24°C	14.14	7.43	4.32	13.64	7.24	4.34	13.13	7.06	4.43	12.60	6.87	4.56	12.04	6.67	4.85	11.36	6.43	5.26
		27°C	14.19	9.06	4.32	13.68	8.86	4.34	13.17	8.67	4.43	12.64	8.47	4.56	12.09	8.26	4.85	11.40	8.01	5.26
		30°C	14.25	10.60	4.32	13.75	10.38	4.35	13.25	10.17	4.44	12.75	9.93	4.57	12.22	9.68	4.86	11.59	9.35	5.28
		33°C	14.54	11.81	4.34	14.11	11.51	4.36	13.69	11.19	4.47	13.25	10.84	4.60	12.80	10.48	4.91	12.23	10.03	5.34
	22°C	27°C	15.53	7.36	4.38	14.98	7.18	4.41	14.42	7.00	4.51	13.85	6.82	4.64	13.25	6.63	4.94	12.51	6.40	5.36
		30°C	15.56	9.02	4.39	15.01	8.83	4.41	14.46	8.64	4.52	13.88	8.44	4.65	13.29	8.24	4.95	12.55	8.00	5.37
		33°C	15.61	10.58	4.39	15.06	10.39	4.42	14.50	10.19	4.52	13.92	9.99	4.65	13.34	9.79	4.95	12.61	9.52	5.37
		36°C	15.71	12.04	4.39	15.18	11.81	4.42	14.66	11.57	4.53	14.13	11.31	4.67	13.60	11.01	4.97	12.97	10.60	5.41
1230	16°C	21°C	13.19	7.86	4.29	12.71	7.65	4.30	12.22	7.45	4.38	11.72	7.24	4.50	11.19	7.02	4.79	10.54	6.75	5.19
		24°C	13.25	9.54	4.29	12.76	9.32	4.30	12.27	9.11	4.39	11.77	8.89	4.50	11.25	8.66	4.79	10.61	8.35	5.20
		27°C	13.40	11.02	4.29	12.96	10.74	4.31	12.53	10.45	4.40	12.08	10.13	4.52	11.64	9.78	4.82	11.08	9.32	5.24
		30°C	14.09	11.81	4.32	13.68	11.47	4.35	13.26	11.13	4.44	12.83	10.77	4.57	12.37	10.39	4.88	11.80	9.92	5.30
	19°C	24°C	14.51	7.83	4.34	13.99	7.63	4.36	13.46	7.43	4.45	12.92	7.23	4.58	12.35	7.02	4.87	11.65	6.76	5.28
		27°C	14.56	9.55	4.34	14.04	9.34	4.36	13.51	9.13	4.46	12.96	8.91	4.58	12.39	8.69	4.88	11.69	8.41	5.29
		30°C	14.63	11.16	4.35	14.10	10.94	4.37	13.59	10.70	4.46	13.07	10.45	4.59	12.53	10.18	4.89	11.88	9.82	5.31
		33°C	14.92	12.45	4.36	14.47	12.13	4.39	14.04	11.78	4.49	13.59	11.41	4.63	13.12	11.02	4.93	12.54	10.54	5.37
	22°C	27°C	15.93	7.75	4.41	15.36	7.56	4.44	14.79	7.37	4.54	14.20	7.17	4.67	13.59	6.97	4.97	12.83	6.72	5.39
		30°C	15.97	9.51	4.41	15.40	9.30	4.44	14.82	9.09	4.54	14.23	8.88	4.67	13.62	8.67	4.97	12.87	8.40	5.39
		33°C	16.02	11.15	4.41	15.44	10.94	4.44	14.87	10.73	4.54	14.27	10.52	4.68	13.67	10.29	4.98	12.93	10.00	5.40
		36°C	16.12	12.69	4.41	15.57	12.44	4.45	15.03	12.18	4.55	14.49	11.90	4.69	13.94	11.58	5.00	13.29	11.14	5.44
1320	16°C	21°C	13.43	8.15	4.30	12.93	7.94	4.31	12.44	7.72	4.40	11.92	7.50	4.52	11.39	7.27	4.80	10.72	6.98	5.21
		24°C	13.48	9.89	4.30	12.98	9.67	4.32	12.49	9.44	4.40	11.98	9.21	4.52	11.45	8.96	4.81	10.80	8.64	5.22
		27°C	13.64	11.43	4.31	13.19	11.14	4.33	12.75	10.83	4.42	12.29	10.50	4.54	11.84	10.12	4.84	11.28	9.64	5.26
		30°C	14.34	12.26	4.34	13.92	11.90	4.36	13.50	11.53	4.46	13.05	11.16	4.59	12.59	10.76	4.89	12.01	10.27	5.32
	19°C	24°C	14.77	8.12	4.36	14.24	7.91	4.38	13.70	7.70	4.47	13.15	7.49	4.60	12.57	7.27	4.89	11.85	6.99	5.30
		27°C	14.82	9.90	4.36	14.29	9.68	4.38	13.75	9.46	4.47	13.19	9.23	4.60	12.61	9.00	4.89	11.89	8.71	5.31
		30°C	14.89	11.58	4.36	14.35	11.34	4.38	13.83	11.10	4.48	13.30	10.83	4.61	12.76	10.54	4.90	12.09	10.16	5.32
		33°C	15.19	12.91	4.38	14.73	12.58	4.40	14.29	12.21	4.51	13.83	11.82	4.64	13.35	11.41	4.95	12.76	10.90	5.38
	22°C	27°C	16.22	8.04	4.42	15.63	7.84	4.45	15.05	7.64	4.55	14.45	7.43	4.69	13.83	7.22	4.99	13.05	6.95	5.41
		30°C	16.26	9.86	4.42	15.67	9.64	4.45	15.09	9.43	4.56	14.49	9.20	4.69	13.86	8.98	4.99	13.09	8.70	5.41
		33°C	16.30	11.57	4.43	15.72	11.34	4.46	15.13	11.12	4.56	14.53	10.90	4.69	13.92	10.66	5.00	13.16	10.35	5.42
		36°C	16.41	13.16	4.43	15.85	12.90	4.46	15.30	12.63	4.57	14.74	12.33	4.71	14.19	11.99	5.02	13.53	11.53	5.45
1430	16°C	21°C	13.58	8.35	4.31	13.08	8.13	4.32	12.58	7.91	4.41	12.06	7.68	4.53	11.53	7.44	4.81	10.85	7.14	5.22
		24°C	13.64	10.14	4.31	13.14	9.90	4.33	12.63	9.67	4.41	12.12	9.42	4.53	11.59	9.17	4.82	10.93	8.84	5.23
		27°C	13.80	11.71	4.32	13.35	11.41	4.34	12.90	11.09	4.43	12.44	10.75	4.55	11.98	10.36	4.85	11.41	9.86	5.27
		30°C	14.51	12.56	4.35	14.09	12.19	4.37	13.65	11.81	4.47	13.21	11.42	4.60	12.74	11.01	4.90	12.15	10.50	5.33
	19°C	24°C	14.95	8.32	4.37	14.41	8.10	4.39	13.86	7.89	4.48	13.30	7.67	4.61	12.72	7.44	4.90	11.99	7.15	5.31
		27°C	15.00	10.15	4.37	14.45	9.92	4.39	13.91	9.69	4.48	13.35	9.45	4.61	12.76	9.21	4.91	12.04	8.91	5.32
		30°C	15.06	11.87	4.37	14.52	11.62	4.39	14.00	11.36	4.49	13.46	11.08	4.62	12.90	10.79	4.92	12.23	10.39	5.34
		33°C	15.37	13.23	4.39	14.91	12.88	4.41	14.45	12.50	4.52	13.99	12.10	4.65	13.51	11.68	4.96	12.91	11.15	5.40
	22°C	27°C	16.41	8.24	4.43	15.82	8.03	4.46	15.23	7.82	4.56	14.62	7.61	4.70	13.99	7.39	5.00	13.21	7.11	5.42
		30°C	16.45	10.11	4.43	15.86	9.88	4.46	15.26	9.65	4.57	14.66	9.42	4.70	14.03	9.19	5.00	13.25	8.90	5.42
		33°C	16.50	11.85	4.44	15.90	11.62	4.47	15.31	11.39	4.57	14.70	11.15	4.70	14.08	10.91	5.01	13.31	10.58	5.43
		36°C	16.60	13.49	4.44	16.03	13.21	4.47	15.47	12.93	4.58	14.92	12.62	4.72	14.36	12.27	5.03	13.69	11.79	5.47

Remark:
AFR: Air flow rate (CFM)
EWB: Entering Wet Bulb Temp. (˚C)
EDB: Entering Dry Bulb Temp. (˚C)

TC: Total Cooling Capacity (kW)
SHC: Sensible Heat Capacity (kW)
PI: Power Input

Notes:
1. Ratings shown are gross capacities which do not include a deduction for indoor fan motor heat.
2. shows nominal capacities.
3. Direct interpolation is permissible. Do not extrapolate.

Model: A5CC60C - A5LC~~61C~~ 61D

Cooling Mode

AFR (CFM)	EWB	EDB	Outdoor temperature																	
			19°C			25°C			30°C			35°C			40°C			46°C		
			TC	SHC	PI	TC	SHC	PI	TC	SHC	PI	TC	SHC	PI	TC	SHC	PI	TC	SHC	PI
1170	16°C	21°C	15.71	9.00	4.97	15.14	8.77	4.98	14.56	8.54	5.08	13.97	8.30	5.22	13.34	8.06	5.55	12.56	7.75	6.02
		24°C	15.78	10.92	4.97	15.20	10.68	4.99	14.62	10.44	5.08	14.03	10.19	5.22	13.41	9.93	5.55	12.65	9.59	6.02
		27°C	15.96	12.62	4.98	15.44	12.31	5.00	14.93	11.98	5.10	14.40	11.62	5.24	13.87	11.22	5.59	13.21	10.70	6.07
		30°C	16.78	13.53	5.01	16.30	13.14	5.04	15.80	12.75	5.15	15.29	12.35	5.30	14.75	11.92	5.65	14.07	11.39	6.14
	19°C	24°C	17.29	8.96	5.03	16.67	8.74	5.06	16.04	8.52	5.16	15.40	8.29	5.31	14.72	8.05	5.65	13.88	7.76	6.13
		27°C	17.34	10.93	5.04	16.72	10.69	5.06	16.10	10.46	5.17	15.45	10.22	5.31	14.77	9.97	5.65	13.93	9.66	6.13
		30°C	17.42	12.79	5.04	16.80	12.53	5.06	16.20	12.27	5.17	15.58	11.98	5.32	14.94	11.68	5.66	14.16	11.28	6.15
		33°C	17.77	14.26	5.05	17.25	13.89	5.09	16.73	13.50	5.21	16.20	13.08	5.36	15.64	12.65	5.72	14.94	12.10	6.22
	22°C	27°C	18.97	8.88	5.11	18.30	8.66	5.14	17.62	8.45	5.26	16.92	8.23	5.41	16.20	8.00	5.76	15.29	7.72	6.25
		30°C	19.02	10.89	5.11	18.35	10.65	5.14	17.67	10.42	5.26	16.97	10.19	5.42	16.24	9.95	5.77	15.34	9.65	6.25
		33°C	19.08	12.77	5.11	18.40	12.53	5.15	17.72	12.30	5.27	17.02	12.06	5.42	16.30	11.81	5.77	15.41	11.48	6.26
		36°C	19.20	14.53	5.12	18.55	14.25	5.15	17.91	13.96	5.28	17.27	13.64	5.44	16.62	13.28	5.80	15.85	12.79	6.30
1340	16°C	21°C	16.12	9.48	4.99	15.53	9.23	5.01	14.93	8.99	5.11	14.32	8.74	5.24	13.68	8.47	5.58	12.88	8.14	6.05
		24°C	16.19	11.51	5.00	15.59	11.25	5.01	15.00	10.99	5.11	14.38	10.72	5.25	13.75	10.44	5.58	12.97	10.08	6.06
		27°C	16.38	13.29	5.00	15.84	12.96	5.02	15.31	12.61	5.13	14.76	12.22	5.27	14.22	11.79	5.62	13.55	11.24	6.10
		30°C	17.22	14.25	5.04	16.72	13.84	5.06	16.21	13.43	5.18	15.68	12.99	5.33	15.12	12.54	5.68	14.43	11.97	6.18
	19°C	24°C	17.74	9.44	5.06	17.10	9.20	5.08	16.45	8.97	5.19	15.79	8.72	5.34	15.09	8.47	5.68	14.23	8.16	6.16
		27°C	17.80	11.52	5.06	17.15	11.26	5.09	16.51	11.01	5.19	15.84	10.75	5.34	15.14	10.48	5.68	14.29	10.15	6.16
		30°C	17.88	13.47	5.06	17.23	13.20	5.09	16.61	12.92	5.20	15.97	12.61	5.35	15.32	12.29	5.69	14.52	11.85	6.18
		33°C	18.24	15.02	5.08	17.69	14.63	5.11	17.15	14.21	5.23	16.61	13.76	5.39	16.03	13.30	5.75	15.32	12.71	6.25
	22°C	27°C	19.47	9.35	5.13	18.77	9.13	5.17	18.07	8.89	5.29	17.35	8.65	5.44	16.60	8.41	5.79	15.68	8.11	6.28
		30°C	19.52	11.47	5.14	18.82	11.22	5.17	18.12	10.97	5.29	17.39	10.72	5.44	16.65	10.46	5.80	15.72	10.14	6.29
		33°C	19.57	13.45	5.14	18.87	13.20	5.17	18.17	12.95	5.29	17.45	12.69	5.45	16.71	12.42	5.80	15.80	12.07	6.29
		36°C	19.70	15.31	5.14	19.03	15.01	5.18	18.37	14.70	5.30	17.70	14.36	5.47	17.04	13.97	5.83	16.25	13.44	6.33
1550	16°C	21°C	16.41	9.83	5.01	15.81	9.57	5.03	15.20	9.32	5.13	14.57	9.05	5.26	13.92	8.77	5.60	13.11	8.42	6.07
		24°C	16.48	11.94	5.02	15.87	11.66	5.03	15.26	11.39	5.13	14.64	11.11	5.27	14.00	10.81	5.60	13.20	10.43	6.08
		27°C	16.67	13.79	5.02	16.12	13.44	5.04	15.58	13.07	5.15	15.03	12.67	5.29	14.47	12.21	5.64	13.79	11.63	6.12
		30°C	17.53	14.79	5.06	17.01	14.35	5.08	16.49	13.92	5.20	15.95	13.46	5.35	15.39	12.99	5.70	14.68	12.39	6.20
	19°C	24°C	18.06	9.80	5.08	17.40	9.55	5.10	16.74	9.29	5.21	16.07	9.04	5.36	15.36	8.77	5.70	14.48	8.44	6.18
		27°C	18.12	11.95	5.08	17.46	11.68	5.10	16.80	11.41	5.21	16.12	11.14	5.36	15.41	10.86	5.70	14.54	10.51	6.19
		30°C	18.20	13.97	5.08	17.54	13.68	5.11	16.91	13.39	5.22	16.26	13.07	5.37	15.59	12.72	5.71	14.77	12.26	6.20
		33°C	18.57	15.58	5.10	18.00	15.17	5.13	17.46	14.73	5.25	16.90	14.26	5.41	16.32	13.77	5.77	15.59	13.16	6.27
	22°C	27°C	19.82	9.70	5.15	19.11	9.46	5.19	18.39	9.22	5.31	17.66	8.97	5.46	16.90	8.71	5.81	15.95	8.39	6.30
		30°C	19.87	11.90	5.15	19.16	11.64	5.19	18.44	11.37	5.31	17.70	11.11	5.46	16.94	10.83	5.82	16.00	10.49	6.31
		33°C	19.93	13.95	5.16	19.21	13.69	5.19	18.49	13.42	5.31	17.75	13.15	5.47	17.01	12.86	5.82	16.08	12.49	6.31
		36°C	20.06	15.88	5.16	19.37	15.56	5.20	18.69	15.23	5.32	18.02	14.88	5.49	17.34	14.46	5.85	16.53	13.91	6.36
1720	16°C	21°C	16.60	10.08	5.02	15.99	9.81	5.04	15.38	9.54	5.14	14.74	9.27	5.28	14.09	8.98	5.61	13.26	8.62	6.08
		24°C	16.67	12.23	5.03	16.05	11.95	5.04	15.44	11.67	5.14	14.81	11.37	5.28	14.16	11.07	5.62	13.35	10.67	6.09
		27°C	16.87	14.13	5.03	16.31	13.77	5.05	15.76	13.39	5.16	15.20	12.97	5.30	14.64	12.50	5.65	13.95	11.90	6.14
		30°C	17.73	15.15	5.07	17.21	14.70	5.09	16.69	14.25	5.21	16.14	13.78	5.36	15.57	13.29	5.71	14.85	12.67	6.21
	19°C	24°C	18.27	10.04	5.09	17.61	9.78	5.11	16.94	9.52	5.22	16.26	9.25	5.37	15.54	8.97	5.71	14.66	8.63	6.19
		27°C	18.33	12.25	5.09	17.66	11.97	5.12	17.00	11.69	5.23	16.31	11.40	5.37	15.59	11.11	5.72	14.71	10.75	6.20
		30°C	18.41	14.32	5.09	17.75	14.02	5.12	17.10	13.71	5.23	16.45	13.37	5.38	15.77	13.02	5.73	14.95	12.54	6.22
		33°C	18.78	15.97	5.11	18.22	15.54	5.14	17.66	15.09	5.26	17.10	14.60	5.42	16.51	14.09	5.78	15.78	13.46	6.29
	22°C	27°C	20.05	9.94	5.16	19.33	9.69	5.20	18.61	9.44	5.32	17.87	9.18	5.47	17.10	8.91	5.82	16.14	8.58	6.32
		30°C	20.10	12.19	5.17	19.38	11.92	5.20	18.65	11.65	5.32	17.91	11.37	5.48	17.14	11.08	5.83	16.19	10.73	6.32
		33°C	20.16	14.30	5.17	19.44	14.02	5.20	18.71	13.75	5.33	17.96	13.46	5.48	17.21	13.16	5.83	16.27	12.77	6.33
		36°C	20.29	16.27	5.17	19.59	15.94	5.21	18.91	15.60	5.34	18.23	15.23	5.50	17.55	14.80	5.86	16.73	14.22	6.37

Remark:
AFR: Air flow rate (CFM)
EWB: Entering Wet Bulb Temp. (˚C)
EDB: Entering Dry Bulb Temp. (˚C)

TC: Total Cooling Capacity (kW)
SHC: Sensible Heat Capacity (kW)
PI: Power Input

Notes:
1. Ratings shown are gross capacities which do not include a deduction for indoor fan motor heat.
2. shows nominal capacities.
3. Direct interpolation is permissible. Do not extrapolate.

Heat Pump (R410A)
Model: A5CC10CR - A5LC10CR
Cooling Mode

AFR (CFM)	EWB	EDB	Outdoor temperature																	
			19°C			25°C			30°C			35°C			40°C			46°C		
			TC	SHC	PI	TC	SHC	PI	TC	SHC	PI	TC	SHC	PI	TC	SHC	PI	TC	SHC	PI
210	16°C	21°C	2.62	1.83	0.73	2.53	1.78	0.79	2.44	1.74	0.86	2.34	1.69	0.93	2.15	1.57	1.01	1.98	1.48	1.11
		24°C	2.63	2.19	0.73	2.53	2.14	0.79	2.44	2.09	0.86	2.34	2.04	0.93	2.15	1.91	1.01	1.99	1.80	1.11
		27°C	2.65	2.49	0.73	2.56	2.43	0.79	2.47	2.37	0.86	2.38	2.31	0.93	2.19	2.15	1.01	2.04	2.02	1.11
		30°C	2.73	2.73	0.73	2.65	2.65	0.80	2.57	2.57	0.86	2.49	2.49	0.94	2.30	2.30	1.02	2.16	2.16	1.12
	19°C	24°C	2.89	1.71	0.74	2.79	1.67	0.80	2.69	1.62	0.87	2.58	1.58	0.94	2.37	1.47	1.02	2.19	1.38	1.13
		27°C	2.89	1.96	0.74	2.79	1.91	0.80	2.69	1.87	0.87	2.58	1.82	0.94	2.37	1.70	1.02	2.20	1.62	1.13
		30°C	2.90	2.41	0.74	2.80	2.36	0.80	2.70	2.31	0.87	2.60	2.25	0.94	2.39	2.11	1.03	2.22	1.99	1.13
		33°C	2.93	2.93	0.74	2.84	2.84	0.81	2.75	2.75	0.87	2.65	2.65	0.95	2.45	2.45	1.03	2.29	2.29	1.14
	22°C	27°C	3.18	1.67	0.76	3.07	1.63	0.82	2.96	1.59	0.89	2.84	1.55	0.96	2.62	1.44	1.04	2.42	1.36	1.15
		30°C	3.18	2.04	0.76	3.07	2.00	0.82	2.96	1.95	0.89	2.84	1.90	0.96	2.62	1.78	1.04	2.42	1.69	1.15
		33°C	3.18	2.38	0.76	3.07	2.34	0.82	2.96	2.29	0.89	2.85	2.24	0.96	2.62	2.10	1.04	2.43	2.00	1.15
		36°C	3.19	2.70	0.76	3.09	2.65	0.82	2.98	2.59	0.89	2.87	2.53	0.96	2.65	2.38	1.05	2.46	2.25	1.15
235	16°C	21°C	2.73	1.91	0.74	2.63	1.86	0.80	2.53	1.81	0.86	2.43	1.76	0.94	2.23	1.64	1.01	2.05	1.54	1.12
		24°C	2.74	2.32	0.74	2.64	2.26	0.80	2.54	2.21	0.86	2.44	2.15	0.94	2.24	2.01	1.02	2.07	1.90	1.12
		27°C	2.77	2.63	0.74	2.68	2.57	0.80	2.58	2.50	0.87	2.49	2.43	0.94	2.30	2.26	1.02	2.14	2.11	1.13
		30°C	2.88	2.88	0.74	2.80	2.80	0.81	2.72	2.72	0.87	2.63	2.63	0.95	2.43	2.43	1.03	2.28	2.28	1.14
	19°C	24°C	3.00	1.81	0.75	2.90	1.76	0.81	2.79	1.71	0.88	2.68	1.67	0.95	2.46	1.55	1.03	2.27	1.46	1.14
		27°C	3.01	2.08	0.75	2.90	2.03	0.81	2.79	1.99	0.88	2.68	1.94	0.95	2.46	1.81	1.03	2.28	1.72	1.14
		30°C	3.02	2.57	0.75	2.92	2.51	0.81	2.81	2.45	0.88	2.71	2.39	0.95	2.49	2.24	1.04	2.31	2.11	1.14
		33°C	3.07	3.07	0.75	2.98	2.98	0.82	2.89	2.89	0.88	2.79	2.79	0.96	2.58	2.58	1.04	2.42	2.42	1.15
	22°C	27°C	3.30	1.77	0.76	3.19	1.73	0.83	3.07	1.68	0.90	2.95	1.64	0.97	2.71	1.53	1.05	2.50	1.44	1.16
		30°C	3.31	2.17	0.76	3.19	2.12	0.83	3.07	2.08	0.90	2.95	2.03	0.97	2.71	1.90	1.05	2.51	1.80	1.16
		33°C	3.31	2.54	0.76	3.20	2.49	0.83	3.08	2.44	0.90	2.96	2.39	0.97	2.72	2.24	1.05	2.52	2.13	1.16
		36°C	3.33	2.87	0.76	3.22	2.82	0.83	3.11	2.76	0.90	3.00	2.70	0.98	2.77	2.52	1.06	2.58	2.38	1.17
250	16°C	21°C	2.83	1.99	0.74	2.72	1.94	0.80	2.62	1.89	0.87	2.51	1.84	0.94	2.30	1.71	1.02	2.12	1.61	1.13
		24°C	2.84	2.42	0.74	2.74	2.36	0.80	2.64	2.30	0.87	2.53	2.24	0.94	2.32	2.09	1.02	2.15	1.97	1.13
		27°C	2.89	2.77	0.75	2.79	2.70	0.81	2.70	2.63	0.87	2.60	2.54	0.95	2.41	2.36	1.03	2.24	2.20	1.14
		30°C	3.03	3.03	0.75	2.94	2.94	0.81	2.85	2.85	0.88	2.76	2.76	0.96	2.56	2.56	1.04	2.39	2.39	1.15
	19°C	24°C	3.11	1.91	0.76	3.00	1.86	0.82	2.89	1.82	0.89	2.77	1.77	0.96	2.54	1.65	1.04	2.35	1.55	1.15
		27°C	3.12	2.21	0.76	3.01	2.16	0.82	2.90	2.11	0.89	2.78	2.06	0.96	2.55	1.92	1.04	2.36	1.82	1.15
		30°C	3.15	2.72	0.76	3.04	2.66	0.82	2.93	2.60	0.89	2.82	2.53	0.96	2.59	2.37	1.05	2.41	2.23	1.15
		33°C	3.22	3.22	0.76	3.12	3.12	0.82	3.03	3.03	0.89	2.93	2.93	0.97	2.71	2.71	1.06	2.54	2.54	1.16
	22°C	27°C	3.42	1.87	0.77	3.29	1.83	0.83	3.17	1.78	0.90	3.04	1.73	0.98	2.80	1.62	1.06	2.58	1.53	1.17
		30°C	3.42	2.30	0.77	3.30	2.26	0.83	3.18	2.21	0.90	3.05	2.16	0.98	2.80	2.02	1.06	2.59	1.92	1.17
		33°C	3.43	2.70	0.77	3.32	2.65	0.83	3.19	2.60	0.91	3.07	2.54	0.98	2.82	2.38	1.06	2.62	2.26	1.17
		36°C	3.47	3.05	0.77	3.36	2.99	0.84	3.24	2.93	0.91	3.12	2.85	0.99	2.89	2.66	1.07	2.69	2.51	1.18

Remark:
AFR: Air flow rate (CFM)
EWB: Entering Wet Bulb Temp. (˚C)
EDB: Entering Dry Bulb Temp. (˚C)

TC: Total Cooling Capacity (kW)
SHC: Sensible Heat Capacity (kW)
PI: Power Input

Notes:
1. Ratings shown are gross capacities which do not include a deduction for indoor fan motor heat.
2. shows nominal capacities.
3. Direct interpolation is permissible. Do not extrapolate.

Heating Mode

ID DB°C	Outdoor WB°C													
	-9		-6		-5		6		12		15		18	
	TC(kW)	SC(kW)	TC(kW)	SC(kW)	TC(kW)	SC(kW)	TC(kW)	SC(kW)	TC(kW)	SC(kW)	TC(kW)	SC(kW)	TC(kW)	SC(kW)
15	1.683	1.683	1.905	1.905	1.979	1.979	2.793	2.793	3.236	3.236	3.458	3.458	3.680	3.680
17	1.639	1.639	1.882	1.882	1.939	1.939	2.789	2.789	3.213	3.213	3.438	3.438	3.663	3.663
19	1.595	1.595	1.858	1.858	1.899	1.899	2.786	2.786	3.190	3.190	3.418	3.418	3.645	3.645
21	1.551	1.551	1.820	1.820	1.859	1.859	2.760	2.760	3.166	3.166	3.397	3.397	3.628	3.628
23	1.507	1.507	1.766	1.766	1.818	1.818	2.713	2.713	3.143	3.143	3.377	3.377	3.610	3.610
25	1.463	1.463	1.712	1.712	1.778	1.778	2.665	2.665	3.120	3.120	3.356	3.356	3.593	3.593
27	1.418	1.418	1.658	1.658	1.738	1.738	2.617	2.617	3.096	3.096	3.336	3.336	3.576	3.576
	FROST REGION													

Model: A5CC15CR - A5LC15CR
Cooling Mode

AFR (CFM)	EWB	EDB	Outdoor temperature																	
			19°C			25°C			30°C			35°C			40°C			46°C		
			TC	SHC	PI	TC	SHC	PI	TC	SHC	PI	TC	SHC	PI	TC	SHC	PI	TC	SHC	PI
250	16°C	21°C	3.45	2.37	0.99	3.33	2.31	1.07	3.20	2.25	1.15	3.08	2.19	1.25	2.82	2.03	1.36	2.61	1.91	1.50
		24°C	3.45	2.84	0.99	3.33	2.78	1.07	3.21	2.71	1.15	3.08	2.65	1.25	2.83	2.47	1.36	2.62	2.33	1.50
		27°C	3.48	3.22	0.99	3.37	3.15	1.07	3.25	3.08	1.16	3.12	3.00	1.25	2.88	2.79	1.36	2.68	2.62	1.50
		30°C	3.59	3.59	0.99	3.49	3.49	1.07	3.38	3.38	1.16	3.27	3.27	1.26	3.03	3.03	1.37	2.84	2.84	1.52
	19°C	24°C	3.80	2.22	1.00	3.67	2.16	1.08	3.54	2.10	1.17	3.40	2.04	1.27	3.12	1.90	1.38	2.89	1.79	1.52
		27°C	3.81	2.54	1.00	3.67	2.48	1.08	3.54	2.42	1.17	3.40	2.36	1.27	3.12	2.21	1.38	2.89	2.09	1.52
		30°C	3.81	3.13	1.00	3.68	3.06	1.08	3.55	3.00	1.18	3.42	2.92	1.27	3.15	2.73	1.38	2.92	2.59	1.53
		33°C	3.86	3.86	1.00	3.73	3.73	1.09	3.61	3.61	1.18	3.49	3.49	1.28	3.23	3.23	1.39	3.02	3.02	1.53
	22°C	27°C	4.19	2.17	1.02	4.04	2.12	1.10	3.89	2.06	1.20	3.74	2.01	1.30	3.44	1.87	1.41	3.18	1.76	1.55
		30°C	4.19	2.64	1.02	4.04	2.59	1.10	3.89	2.53	1.20	3.74	2.47	1.30	3.44	2.31	1.41	3.19	2.19	1.55
		33°C	4.19	3.09	1.02	4.04	3.03	1.10	3.90	2.97	1.20	3.74	2.91	1.30	3.45	2.73	1.41	3.19	2.59	1.55
		36°C	4.20	3.50	1.02	4.06	3.43	1.11	3.92	3.36	1.20	3.78	3.29	1.30	3.49	3.08	1.41	3.24	2.92	1.56
370	16°C	21°C	3.59	2.48	0.99	3.46	2.41	1.08	3.33	2.35	1.16	3.19	2.28	1.26	2.93	2.13	1.37	2.70	2.00	1.51
		24°C	3.60	3.01	0.99	3.47	2.94	1.08	3.34	2.87	1.17	3.21	2.80	1.26	2.95	2.61	1.37	2.72	2.46	1.51
		27°C	3.64	3.42	1.00	3.52	3.34	1.08	3.40	3.25	1.17	3.28	3.16	1.27	3.03	2.93	1.38	2.82	2.74	1.52
		30°C	3.80	3.80	1.00	3.69	3.69	1.09	3.57	3.57	1.18	3.46	3.46	1.28	3.20	3.20	1.39	3.00	3.00	1.54
	19°C	24°C	3.96	2.35	1.01	3.81	2.29	1.09	3.67	2.23	1.19	3.52	2.17	1.29	3.24	2.02	1.39	2.99	1.90	1.54
		27°C	3.96	2.70	1.01	3.82	2.64	1.09	3.68	2.58	1.19	3.53	2.52	1.29	3.24	2.36	1.39	3.00	2.23	1.54
		30°C	3.98	3.33	1.01	3.84	3.26	1.10	3.71	3.19	1.19	3.56	3.11	1.29	3.28	2.91	1.40	3.04	2.75	1.54
		33°C	4.05	4.05	1.02	3.92	3.92	1.10	3.80	3.80	1.19	3.67	3.67	1.30	3.40	3.40	1.41	3.18	3.18	1.55
	22°C	27°C	4.35	2.30	1.03	4.19	2.24	1.11	4.04	2.19	1.21	3.88	2.13	1.31	3.56	1.98	1.42	3.30	1.87	1.57
		30°C	4.35	2.82	1.03	4.20	2.76	1.12	4.04	2.70	1.21	3.88	2.63	1.31	3.57	2.47	1.42	3.30	2.34	1.57
		33°C	4.36	3.30	1.03	4.21	3.24	1.12	4.05	3.17	1.21	3.89	3.10	1.31	3.58	2.91	1.42	3.32	2.76	1.57
		36°C	4.39	3.73	1.03	4.24	3.66	1.12	4.10	3.59	1.21	3.95	3.50	1.32	3.64	3.28	1.43	3.40	3.09	1.58
410	16°C	21°C	3.72	2.59	1.00	3.59	2.52	1.08	3.45	2.45	1.17	3.31	2.39	1.27	3.03	2.22	1.38	2.80	2.09	1.52
		24°C	3.74	3.14	1.00	3.61	3.07	1.09	3.47	2.99	1.18	3.33	2.91	1.27	3.06	2.72	1.38	2.83	2.56	1.52
		27°C	3.80	3.60	1.01	3.68	3.51	1.09	3.55	3.41	1.18	3.43	3.30	1.28	3.17	3.06	1.39	2.95	2.86	1.54
		30°C	3.99	3.99	1.02	3.88	3.88	1.10	3.76	3.76	1.19	3.63	3.63	1.30	3.36	3.36	1.41	3.14	3.14	1.55
	19°C	24°C	4.10	2.48	1.02	3.95	2.42	1.10	3.80	2.36	1.19	3.65	2.29	1.30	3.35	2.14	1.41	3.09	2.02	1.55
		27°C	4.11	2.87	1.02	3.96	2.80	1.10	3.81	2.74	1.20	3.66	2.67	1.30	3.36	2.50	1.41	3.11	2.36	1.55
		30°C	4.14	3.53	1.02	4.00	3.46	1.11	3.85	3.38	1.20	3.71	3.29	1.30	3.41	3.07	1.41	3.17	2.90	1.56
		33°C	4.23	4.23	1.03	4.11	4.11	1.11	3.98	3.98	1.21	3.85	3.85	1.31	3.57	3.57	1.42	3.34	3.34	1.57
	22°C	27°C	4.50	2.43	1.04	4.34	2.37	1.12	4.17	2.31	1.22	4.01	2.25	1.32	3.68	2.10	1.43	3.40	1.99	1.58
		30°C	4.51	2.99	1.04	4.35	2.94	1.13	4.18	2.87	1.22	4.01	2.81	1.32	3.69	2.63	1.43	3.41	2.49	1.58
		33°C	4.52	3.51	1.04	4.37	3.44	1.13	4.21	3.37	1.22	4.04	3.30	1.32	3.72	3.09	1.44	3.44	2.93	1.58
		36°C	4.56	3.96	1.04	4.42	3.89	1.13	4.27	3.80	1.23	4.11	3.71	1.33	3.80	3.46	1.44	3.55	3.26	1.59

Remark:
AFR: Air flow rate (CFM)
EWB: Entering Wet Bulb Temp. (˚C)
EDB: Entering Dry Bulb Temp. (˚C)
TC: Total Cooling Capacity (kW)
SHC: Sensible Heat Capacity (kW)
PI: Power Input

Notes:
1. Ratings shown are gross capacities which do not include a deduction for indoor fan motor heat.
2. shows nominal capacities.
3. Direct interpolation is permissible. Do not extrapolate.

Heating Mode

ID DB°C	Outdoor WB°C													
	-9		-6		-5		6		12		15		18	
	TC(kW)	SC(kW)	TC(kW)	SC(kW)	TC(kW)	SC(kW)	TC(kW)	SC(kW)	TC(kW)	SC(kW)	TC(kW)	SC(kW)	TC(kW)	SC(kW)
15	1.683	1.683	1.905	1.905	1.979	1.979	2.793	2.793	3.236	3.236	3.458	3.458	3.680	3.680
17	1.639	1.639	1.882	1.882	1.939	1.939	2.789	2.789	3.213	3.213	3.438	3.438	3.663	3.663
19	1.595	1.595	1.858	1.858	1.899	1.899	2.786	2.786	3.190	3.190	3.418	3.418	3.645	3.645
21	1.551	1.551	1.820	1.820	1.859	1.859	2.760	2.760	3.166	3.166	3.397	3.397	3.628	3.628
23	1.507	1.507	1.766	1.766	1.818	1.818	2.713	2.713	3.143	3.143	3.377	3.377	3.610	3.610
25	1.463	1.463	1.712	1.712	1.778	1.778	2.665	2.665	3.120	3.120	3.356	3.356	3.593	3.593
27	1.418	1.418	1.658	1.658	1.738	1.738	2.617	2.617	3.096	3.096	3.336	3.336	3.576	3.576
	FROST REGION													

Model: A5CC20CR - A5LC20CR
Cooling Mode

AFR (CFM)	EWB	EDB	Outdoor temperature																	
			19°C			25°C			30°C			35°C			40°C			46°C		
			TC	SHC	PI	TC	SHC	PI	TC	SHC	PI	TC	SHC	PI	TC	SHC	PI	TC	SHC	PI
480	16°C	21°C	4.98	3.48	1.34	4.80	3.39	1.44	4.63	3.30	1.56	4.44	3.20	1.70	4.08	2.98	1.84	3.76	2.80	2.03
		24°C	4.99	4.16	1.34	4.81	4.07	1.44	4.63	3.97	1.56	4.45	3.88	1.70	4.08	3.62	1.84	3.78	3.41	2.03
		27°C	5.03	4.72	1.34	4.86	4.61	1.45	4.69	4.50	1.57	4.51	4.39	1.70	4.16	4.09	1.85	3.87	3.84	2.04
		30°C	5.18	5.18	1.34	5.03	5.03	1.46	4.88	4.88	1.58	4.72	4.72	1.71	4.38	4.38	1.86	4.10	4.10	2.06
	19°C	24°C	5.49	3.25	1.36	5.30	3.16	1.47	5.11	3.08	1.59	4.90	2.99	1.73	4.51	2.79	1.87	4.17	2.63	2.06
		27°C	5.50	3.71	1.36	5.30	3.63	1.47	5.11	3.55	1.59	4.91	3.46	1.73	4.51	3.24	1.87	4.17	3.07	2.06
		30°C	5.51	4.58	1.36	5.31	4.49	1.47	5.13	4.39	1.59	4.93	4.28	1.73	4.54	4.00	1.87	4.21	3.79	2.07
		33°C	5.57	5.57	1.36	5.39	5.39	1.47	5.21	5.21	1.60	5.04	5.04	1.73	4.66	4.66	1.88	4.36	4.36	2.08
	22°C	27°C	6.04	3.18	1.38	5.83	3.10	1.50	5.62	3.02	1.62	5.40	2.94	1.76	4.97	2.74	1.91	4.60	2.58	2.10
		30°C	6.04	3.87	1.38	5.84	3.79	1.50	5.62	3.70	1.62	5.40	3.62	1.76	4.97	3.38	1.91	4.60	3.21	2.10
		33°C	6.05	4.52	1.38	5.84	4.44	1.50	5.63	4.35	1.62	5.41	4.26	1.76	4.97	4.00	1.91	4.61	3.80	2.10
		36°C	6.07	5.13	1.38	5.87	5.03	1.50	5.66	4.92	1.62	5.46	4.81	1.76	5.03	4.51	1.91	4.68	4.28	2.11
558	16°C	21°C	5.18	3.63	1.35	4.99	3.53	1.46	4.80	3.44	1.58	4.61	3.34	1.71	4.23	3.11	1.86	3.90	2.93	2.04
		24°C	5.20	4.40	1.35	5.01	4.30	1.46	4.82	4.20	1.58	4.63	4.09	1.71	4.25	3.82	1.86	3.93	3.60	2.05
		27°C	5.26	5.00	1.35	5.08	4.88	1.46	4.91	4.76	1.58	4.73	4.61	1.72	4.37	4.29	1.87	4.07	4.01	2.06
		30°C	5.48	5.48	1.36	5.32	5.32	1.47	5.16	5.16	1.60	4.99	4.99	1.74	4.62	4.62	1.88	4.32	4.32	2.08
	19°C	24°C	5.71	3.43	1.37	5.50	3.34	1.48	5.30	3.26	1.61	5.08	3.17	1.74	4.67	2.95	1.89	4.31	2.78	2.08
		27°C	5.72	3.95	1.37	5.51	3.86	1.48	5.31	3.78	1.61	5.09	3.69	1.74	4.68	3.45	1.89	4.33	3.26	2.08
		30°C	5.74	4.87	1.37	5.54	4.77	1.48	5.35	4.66	1.61	5.14	4.55	1.74	4.73	4.25	1.89	4.39	4.02	2.09
		33°C	5.84	5.84	1.38	5.66	5.66	1.49	5.48	5.48	1.62	5.30	5.30	1.76	4.91	4.91	1.91	4.59	4.59	2.11
	22°C	27°C	6.27	3.36	1.39	6.05	3.28	1.51	5.83	3.20	1.64	5.59	3.11	1.78	5.14	2.90	1.93	4.75	2.74	2.12
		30°C	6.28	4.12	1.39	6.06	4.04	1.51	5.83	3.95	1.64	5.60	3.85	1.78	5.15	3.61	1.93	4.76	3.43	2.12
		33°C	6.29	4.83	1.40	6.07	4.74	1.51	5.85	4.64	1.64	5.62	4.54	1.78	5.17	4.26	1.93	4.79	4.04	2.12
		36°C	6.33	5.46	1.40	6.12	5.36	1.52	5.91	5.24	1.64	5.70	5.12	1.78	5.25	4.79	1.93	4.90	4.52	2.13
570	16°C	21°C	5.37	3.78	1.36	5.17	3.69	1.47	4.98	3.59	1.59	4.77	3.49	1.72	4.37	3.25	1.87	4.03	3.06	2.06
		24°C	5.40	4.60	1.36	5.20	4.49	1.47	5.01	4.38	1.59	4.81	4.26	1.73	4.41	3.98	1.87	4.08	3.75	2.06
		27°C	5.49	5.27	1.36	5.31	5.13	1.48	5.13	4.99	1.60	4.94	4.83	1.74	4.57	4.48	1.88	4.26	4.18	2.08
		30°C	5.76	5.76	1.38	5.59	5.59	1.49	5.42	5.42	1.62	5.24	5.24	1.75	4.85	4.85	1.91	4.53	4.53	2.10
	19°C	24°C	5.91	3.63	1.38	5.70	3.54	1.49	5.48	3.45	1.62	5.26	3.35	1.76	4.83	3.13	1.90	4.46	2.95	2.10
		27°C	5.93	4.20	1.38	5.72	4.10	1.50	5.50	4.01	1.62	5.28	3.91	1.76	4.85	3.65	1.91	4.48	3.46	2.10
		30°C	5.98	5.17	1.38	5.77	5.05	1.50	5.56	4.94	1.62	5.35	4.81	1.76	4.92	4.50	1.91	4.57	4.24	2.11
		33°C	6.11	6.11	1.39	5.93	5.93	1.51	5.75	5.75	1.64	5.56	5.56	1.78	5.15	5.15	1.93	4.81	4.81	2.13
	22°C	27°C	6.49	3.55	1.41	6.26	3.47	1.52	6.02	3.38	1.65	5.78	3.30	1.79	5.31	3.07	1.94	4.91	2.90	2.14
		30°C	6.50	4.38	1.41	6.27	4.29	1.52	6.03	4.20	1.65	5.79	4.10	1.79	5.32	3.84	1.94	4.92	3.64	2.14
		33°C	6.52	5.13	1.41	6.30	5.04	1.53	6.07	4.93	1.65	5.83	4.82	1.79	5.36	4.52	1.95	4.97	4.29	2.14
		36°C	6.58	5.79	1.41	6.38	5.68	1.53	6.16	5.56	1.66	5.93	5.42	1.80	5.48	5.06	1.96	5.11	4.76	2.16

Remark:
AFR: Air flow rate (CFM)
EWB: Entering Wet Bulb Temp. (˚C)
EDB: Entering Dry Bulb Temp. (˚C)

TC: Total Cooling Capacity (kW)
SHC: Sensible Heat Capacity (kW)
PI: Power Input

Notes:
1. Ratings shown are gross capacities which do not include a deduction for indoor fan motor heat.
2. shows nominal capacities.
3. Direct interpolation is permissible. Do not extrapolate.

Heating Mode

ID DB°C	Outdoor WB°C													
	-9		-6		-5		6		12		15		18	
	TC(kW)	SC(kW)	TC(kW)	SC(kW)	TC(kW)	SC(kW)	TC(kW)	SC(kW)	TC(kW)	SC(kW)	TC(kW)	SC(kW)	TC(kW)	SC(kW)
15	3.278	3.278	3.710	3.710	3.854	3.854	5.438	5.438	6.302	6.302	6.735	6.735	7.167	7.167
17	3.192	3.192	3.609	3.609	3.777	3.777	5.432	5.432	6.266	6.266	6.705	6.705	7.145	7.145
19	3.106	3.106	3.509	3.509	3.701	3.701	5.425	5.425	6.230	6.230	6.676	6.676	7.122	7.122
21	3.020	3.020	3.427	3.427	3.624	3.624	5.381	5.381	6.194	6.194	6.647	6.647	7.100	7.100
23	2.934	2.934	3.363	3.363	3.548	3.548	5.299	5.299	6.157	6.157	6.618	6.618	7.078	7.078
25	2.848	2.848	3.300	3.300	3.472	3.472	5.217	5.217	6.121	6.121	6.589	6.589	7.056	7.056
27	2.762	2.762	3.237	3.237	3.395	3.395	5.135	5.135	6.085	6.085	6.559	6.559	7.034	7.034
	FROST REGION													

Model: A5CC20CR - A5LC20CR (3 Phase)
Cooling Mode

AFR (CFM)	EWB	EDB	Outdoor temperature																	
			19°C			25°C			30°C			35°C			40°C			46°C		
			TC	SHC	PI	TC	SHC	PI	TC	SHC	PI	TC	SHC	PI	TC	SHC	PI	TC	SHC	PI
480	16°C	21°C	4.98	3.48	1.36	4.80	3.39	1.47	4.63	3.30	1.59	4.44	3.20	1.73	4.08	2.98	1.87	3.76	2.80	2.07
		24°C	4.99	4.16	1.36	4.81	4.07	1.47	4.63	3.97	1.59	4.45	3.88	1.73	4.08	3.62	1.88	3.78	3.41	2.07
		27°C	5.03	4.72	1.36	4.86	4.61	1.47	4.69	4.50	1.60	4.51	4.39	1.73	4.16	4.09	1.88	3.87	3.84	2.08
		30°C	5.18	5.18	1.37	5.03	5.03	1.48	4.88	4.88	1.61	4.72	4.72	1.75	4.38	4.38	1.90	4.10	4.10	2.10
	19°C	24°C	5.49	3.25	1.38	5.30	3.16	1.50	5.11	3.08	1.62	4.90	2.99	1.76	4.51	2.79	1.91	4.17	2.63	2.10
		27°C	5.50	3.71	1.38	5.30	3.63	1.50	5.11	3.55	1.62	4.91	3.46	1.76	4.51	3.24	1.91	4.17	3.07	2.10
		30°C	5.51	4.58	1.38	5.31	4.49	1.50	5.13	4.39	1.62	4.93	4.28	1.76	4.54	4.00	1.91	4.21	3.79	2.11
		33°C	5.57	5.57	1.39	5.39	5.39	1.50	5.21	5.21	1.63	5.04	5.04	1.77	4.66	4.66	1.92	4.36	4.36	2.12
	22°C	27°C	6.04	3.18	1.41	5.83	3.10	1.52	5.62	3.02	1.65	5.40	2.94	1.79	4.97	2.74	1.94	4.60	2.58	2.14
		30°C	6.04	3.87	1.41	5.84	3.79	1.52	5.62	3.70	1.65	5.40	3.62	1.79	4.97	3.38	1.95	4.60	3.21	2.14
		33°C	6.05	4.52	1.41	5.84	4.44	1.53	5.63	4.35	1.65	5.41	4.26	1.79	4.97	4.00	1.95	4.61	3.80	2.14
		36°C	6.07	5.13	1.41	5.87	5.03	1.53	5.66	4.92	1.66	5.46	4.81	1.80	5.03	4.51	1.95	4.68	4.28	2.15
558	16°C	21°C	5.18	3.63	1.37	4.99	3.53	1.48	4.80	3.44	1.61	4.61	3.34	1.74	4.23	3.11	1.89	3.90	2.93	2.08
		24°C	5.20	4.40	1.37	5.01	4.30	1.49	4.82	4.20	1.61	4.63	4.09	1.75	4.25	3.82	1.89	3.93	3.60	2.09
		27°C	5.26	5.00	1.38	5.08	4.88	1.49	4.91	4.76	1.61	4.73	4.61	1.75	4.37	4.29	1.90	4.07	4.01	2.10
		30°C	5.48	5.48	1.39	5.32	5.32	1.50	5.16	5.16	1.63	4.99	4.99	1.77	4.62	4.62	1.92	4.32	4.32	2.12
	19°C	24°C	5.71	3.43	1.40	5.50	3.34	1.51	5.30	3.26	1.64	5.08	3.17	1.77	4.67	2.95	1.92	4.31	2.78	2.12
		27°C	5.72	3.95	1.40	5.51	3.86	1.51	5.31	3.78	1.64	5.09	3.69	1.78	4.68	3.45	1.93	4.33	3.26	2.12
		30°C	5.74	4.87	1.40	5.54	4.77	1.51	5.35	4.66	1.64	5.14	4.55	1.78	4.73	4.25	1.93	4.39	4.02	2.13
		33°C	5.84	5.84	1.40	5.66	5.66	1.52	5.48	5.48	1.65	5.30	5.30	1.79	4.91	4.91	1.94	4.59	4.59	2.15
	22°C	27°C	6.27	3.36	1.42	6.05	3.28	1.54	5.83	3.20	1.67	5.59	3.11	1.81	5.14	2.90	1.96	4.75	2.74	2.16
		30°C	6.28	4.12	1.42	6.06	4.04	1.54	5.83	3.95	1.67	5.60	3.85	1.81	5.15	3.61	1.96	4.76	3.43	2.16
		33°C	6.29	4.83	1.42	6.07	4.74	1.54	5.85	4.64	1.67	5.62	4.54	1.81	5.17	4.26	1.97	4.79	4.04	2.17
		36°C	6.33	5.46	1.42	6.12	5.36	1.54	5.91	5.24	1.67	5.70	5.12	1.82	5.25	4.79	1.97	4.90	4.52	2.18
570	16°C	21°C	5.37	3.78	1.38	5.17	3.69	1.50	4.98	3.59	1.62	4.77	3.49	1.76	4.37	3.25	1.91	4.03	3.06	2.10
		24°C	5.40	4.60	1.39	5.20	4.49	1.50	5.01	4.38	1.62	4.81	4.26	1.76	4.41	3.98	1.91	4.08	3.75	2.10
		27°C	5.49	5.27	1.39	5.31	5.13	1.50	5.13	4.99	1.63	4.94	4.83	1.77	4.57	4.48	1.92	4.26	4.18	2.12
		30°C	5.76	5.76	1.40	5.59	5.59	1.52	5.42	5.42	1.65	5.24	5.24	1.79	4.85	4.85	1.94	4.53	4.53	2.14
	19°C	24°C	5.91	3.63	1.41	5.70	3.54	1.52	5.48	3.45	1.65	5.26	3.35	1.79	4.83	3.13	1.94	4.46	2.95	2.14
		27°C	5.93	4.20	1.41	5.72	4.10	1.52	5.50	4.01	1.65	5.28	3.91	1.79	4.85	3.65	1.94	4.48	3.46	2.14
		30°C	5.98	5.17	1.41	5.77	5.05	1.53	5.56	4.94	1.66	5.35	4.81	1.80	4.92	4.50	1.95	4.57	4.24	2.15
		33°C	6.11	6.11	1.42	5.93	5.93	1.54	5.75	5.75	1.67	5.56	5.56	1.81	5.15	5.15	1.97	4.81	4.81	2.17
	22°C	27°C	6.49	3.55	1.43	6.26	3.47	1.55	6.02	3.38	1.68	5.78	3.30	1.83	5.31	3.07	1.98	4.91	2.90	2.18
		30°C	6.50	4.38	1.43	6.27	4.29	1.55	6.03	4.20	1.68	5.79	4.10	1.83	5.32	3.84	1.98	4.92	3.64	2.18
		33°C	6.52	5.13	1.44	6.30	5.04	1.56	6.07	4.93	1.69	5.83	4.82	1.83	5.36	4.52	1.98	4.97	4.29	2.19
		36°C	6.58	5.79	1.44	6.38	5.68	1.56	6.16	5.56	1.69	5.93	5.42	1.84	5.48	5.06	1.99	5.11	4.76	2.20

Remark:
AFR: Air flow rate (CFM)
EWB: Entering Wet Bulb Temp. (˚C)
EDB: Entering Dry Bulb Temp. (˚C)
TC: Total Cooling Capacity (kW)
SHC: Sensible Heat Capacity (kW)
PI: Power Input

Notes:
1. Ratings shown are gross capacities which do not include a deduction for indoor fan motor heat.
2. shows nominal capacities.
3. Direct interpolation is permissible. Do not extrapolate.

Heating Mode

ID DB°C	Outdoor WB°C													
	-9		-6		-5		6		12		15		18	
	TC(kW)	SC(kW)	TC(kW)	SC(kW)	TC(kW)	SC(kW)	TC(kW)	SC(kW)	TC(kW)	SC(kW)	TC(kW)	SC(kW)	TC(kW)	SC(kW)
15	3.278	3.278	3.710	3.710	3.854	3.854	5.438	5.438	6.302	6.302	6.735	6.735	7.167	7.167
17	3.192	3.192	3.609	3.609	3.777	3.777	5.432	5.432	6.266	6.266	6.705	6.705	7.145	7.145
19	3.106	3.106	3.509	3.509	3.701	3.701	5.425	5.425	6.230	6.230	6.676	6.676	7.122	7.122
21	3.020	3.020	3.427	3.427	3.624	3.624	5.381	5.381	6.194	6.194	6.647	6.647	7.100	7.100
23	2.934	2.934	3.363	3.363	3.548	3.548	5.299	5.299	6.157	6.157	6.618	6.618	7.078	7.078
25	2.848	2.848	3.300	3.300	3.472	3.472	5.217	5.217	6.121	6.121	6.589	6.589	7.056	7.056
27	2.762	2.762	3.237	3.237	3.395	3.395	5.135	5.135	6.085	6.085	6.559	6.559	7.034	7.034
	FROST REGION													

Model: A5CC25CR - A5LC25CR
Cooling Mode

AFR (CFM)	EWB	EDB	Outdoor temperature																	
			19°C			25°C			30°C			35°C			40°C			46°C		
			TC	SHC	PI	TC	SHC	PI	TC	SHC	PI	TC	SHC	PI	TC	SHC	PI	TC	SHC	PI
535	16°C	21°C	5.80	4.05	1.52	5.60	3.95	1.65	5.39	3.84	1.78	5.17	3.73	1.93	4.75	3.47	2.10	4.39	3.26	2.31
		24°C	5.81	4.85	1.52	5.61	4.74	1.65	5.40	4.63	1.78	5.18	4.52	1.93	4.76	4.22	2.10	4.40	3.98	2.31
		27°C	5.86	5.50	1.52	5.66	5.38	1.65	5.46	5.25	1.79	5.26	5.12	1.94	4.85	4.76	2.10	4.51	4.47	2.32
		30°C	6.04	6.04	1.53	5.86	5.86	1.66	5.69	5.69	1.80	5.50	5.50	1.95	5.10	5.10	2.12	4.77	4.77	2.34
	19°C	24°C	6.40	3.78	1.55	6.18	3.69	1.67	5.95	3.59	1.81	5.72	3.49	1.97	5.25	3.25	2.13	4.86	3.06	2.35
		27°C	6.41	4.33	1.55	6.18	4.23	1.67	5.95	4.13	1.81	5.72	4.03	1.97	5.26	3.77	2.13	4.86	3.57	2.35
		30°C	6.42	5.34	1.55	6.19	5.23	1.67	5.98	5.11	1.82	5.75	4.99	1.97	5.29	4.67	2.14	4.91	4.41	2.36
		33°C	6.49	6.49	1.55	6.28	6.28	1.68	6.08	6.08	1.82	5.87	5.87	1.98	5.43	5.43	2.15	5.08	5.08	2.37
	22°C	27°C	7.04	3.70	1.57	6.80	3.61	1.71	6.55	3.52	1.85	6.30	3.43	2.01	5.79	3.19	2.18	5.36	3.01	2.40
		30°C	7.05	4.51	1.57	6.80	4.42	1.71	6.55	4.32	1.85	6.30	4.21	2.01	5.79	3.94	2.18	5.36	3.74	2.40
		33°C	7.05	5.27	1.57	6.80	5.17	1.71	6.56	5.07	1.85	6.30	4.96	2.01	5.80	4.66	2.18	5.37	4.43	2.40
		36°C	7.07	5.98	1.58	6.84	5.86	1.71	6.60	5.73	1.85	6.36	5.61	2.01	5.87	5.26	2.18	5.45	4.99	2.40
660	16°C	21°C	6.04	4.23	1.54	5.82	4.12	1.66	5.60	4.01	1.80	5.37	3.89	1.95	4.93	3.63	2.11	4.55	3.41	2.33
		24°C	6.06	5.13	1.54	5.84	5.01	1.66	5.62	4.89	1.80	5.39	4.77	1.95	4.96	4.45	2.12	4.58	4.20	2.33
		27°C	6.13	5.83	1.54	5.92	5.69	1.67	5.72	5.54	1.81	5.51	5.38	1.96	5.09	5.00	2.13	4.74	4.67	2.35
		30°C	6.39	6.39	1.55	6.20	6.20	1.68	6.01	6.01	1.82	5.82	5.82	1.98	5.39	5.39	2.15	5.04	5.04	2.37
	19°C	24°C	6.65	4.00	1.56	6.42	3.90	1.69	6.18	3.80	1.83	5.93	3.69	1.98	5.44	3.44	2.15	5.03	3.24	2.37
		27°C	6.66	4.61	1.56	6.43	4.50	1.69	6.19	4.40	1.83	5.94	4.30	1.99	5.46	4.02	2.15	5.04	3.80	2.37
		30°C	6.70	5.68	1.56	6.46	5.56	1.69	6.23	5.43	1.83	5.99	5.30	1.99	5.52	4.96	2.16	5.12	4.68	2.38
		33°C	6.81	6.81	1.57	6.60	6.60	1.70	6.39	6.39	1.84	6.18	6.18	2.00	5.72	5.72	2.17	5.35	5.35	2.40
	22°C	27°C	7.31	3.91	1.59	7.05	3.82	1.72	6.79	3.73	1.87	6.52	3.63	2.02	5.99	3.38	2.20	5.54	3.19	2.42
		30°C	7.32	4.80	1.59	7.06	4.70	1.72	6.80	4.60	1.87	6.53	4.49	2.02	6.00	4.21	2.20	5.55	3.99	2.42
		33°C	7.33	5.63	1.59	7.08	5.52	1.72	6.82	5.41	1.87	6.55	5.29	2.03	6.03	4.97	2.20	5.58	4.71	2.42
		36°C	7.38	6.36	1.59	7.14	6.24	1.73	6.89	6.11	1.87	6.64	5.97	2.03	6.13	5.59	2.21	5.71	5.27	2.43
690	16°C	21°C	6.26	4.41	1.55	6.03	4.30	1.67	5.80	4.18	1.81	5.56	4.07	1.97	5.10	3.79	2.13	4.70	3.56	2.35
		24°C	6.29	5.36	1.55	6.07	5.23	1.68	5.84	5.10	1.82	5.60	4.97	1.97	5.14	4.64	2.14	4.75	4.37	2.35
		27°C	6.40	6.14	1.55	6.19	5.98	1.68	5.98	5.81	1.82	5.76	5.63	1.98	5.33	5.22	2.15	4.96	4.87	2.37
		30°C	6.72	6.72	1.57	6.52	6.52	1.70	6.32	6.32	1.84	6.11	6.11	2.00	5.66	5.66	2.17	5.28	5.28	2.40
	19°C	24°C	6.89	4.23	1.57	6.64	4.12	1.70	6.39	4.02	1.85	6.13	3.91	2.00	5.63	3.64	2.17	5.19	3.44	2.39
		27°C	6.91	4.89	1.57	6.66	4.78	1.70	6.41	4.67	1.85	6.16	4.55	2.00	5.65	4.26	2.17	5.22	4.03	2.39
		30°C	6.97	6.02	1.58	6.72	5.89	1.71	6.48	5.76	1.85	6.23	5.61	2.01	5.74	5.24	2.18	5.33	4.94	2.40
		33°C	7.12	7.12	1.59	6.91	6.91	1.72	6.70	6.70	1.86	6.48	6.48	2.02	6.00	6.00	2.20	5.61	5.61	2.43
	22°C	27°C	7.56	4.14	1.60	7.29	4.05	1.74	7.02	3.94	1.88	6.74	3.84	2.04	6.19	3.58	2.21	5.72	3.38	2.44
		30°C	7.58	5.10	1.60	7.31	5.00	1.74	7.03	4.89	1.88	6.75	4.78	2.04	6.20	4.48	2.21	5.74	4.25	2.44
		33°C	7.60	5.98	1.61	7.34	5.87	1.74	7.07	5.75	1.89	6.79	5.62	2.05	6.25	5.27	2.22	5.79	5.00	2.44
		36°C	7.67	6.75	1.61	7.43	6.63	1.75	7.18	6.48	1.89	6.92	6.32	2.05	6.39	5.90	2.23	5.96	5.55	2.46

Remark:
AFR: Air flow rate (CFM)
EWB: Entering Wet Bulb Temp. (˚C)
EDB: Entering Dry Bulb Temp. (˚C)

TC: Total Cooling Capacity (kW)
SHC: Sensible Heat Capacity (kW)
PI: Power Input

Notes:
1. Ratings shown are gross capacities which do not include a deduction for indoor fan motor heat.
2. shows nominal capacities.
3. Direct interpolation is permissible. Do not extrapolate.

Heating Mode

ID DB°C	Outdoor WB°C													
	-9		-6		-5		6		12		15		18	
	TC(kW)	SC(kW)	TC(kW)	SC(kW)	TC(kW)	SC(kW)	TC(kW)	SC(kW)	TC(kW)	SC(kW)	TC(kW)	SC(kW)	TC(kW)	SC(kW)
15	3.898	3.898	4.412	4.412	4.583	4.583	6.467	6.467	7.495	7.495	8.009	8.009	8.523	8.523
17	3.796	3.796	4.406	4.406	4.503	4.503	6.459	6.459	7.507	7.507	8.037	8.037	8.568	8.568
19	3.694	3.694	4.399	4.399	4.422	4.422	6.452	6.452	7.519	7.519	8.066	8.066	8.613	8.613
21	3.591	3.591	4.325	4.325	4.342	4.342	6.433	6.433	7.532	7.532	8.095	8.095	8.658	8.658
23	3.489	3.489	4.182	4.182	4.261	4.261	6.404	6.404	7.544	7.544	8.123	8.123	8.703	8.703
25	3.387	3.387	4.039	4.039	4.181	4.181	6.374	6.374	7.556	7.556	8.152	8.152	8.748	8.748
27	3.285	3.285	3.897	3.897	4.101	4.101	6.345	6.345	7.569	7.569	8.181	8.181	8.792	8.792
	FROST REGION													

Model: A5CC25CR - A5LC25CR (3 Phase)
Cooling Mode

AFR (CFM)	EWB	EDB	Outdoor temperature																	
			19°C			25°C			30°C			35°C			40°C			46°C		
			TC	SHC	PI	TC	SHC	PI	TC	SHC	PI	TC	SHC	PI	TC	SHC	PI	TC	SHC	PI
535	16°C	21°C	6.32	4.41	1.73	6.09	4.30	1.87	5.87	4.18	2.02	5.63	4.06	2.19	5.17	3.78	2.38	4.77	3.55	2.62
		24°C	6.33	5.28	1.73	6.10	5.16	1.87	5.88	5.04	2.02	5.64	4.92	2.20	5.18	4.59	2.38	4.79	4.33	2.63
		27°C	6.38	5.99	1.73	6.16	5.85	1.87	5.95	5.71	2.03	5.72	5.57	2.20	5.28	5.18	2.39	4.91	4.87	2.64
		30°C	6.57	6.57	1.74	6.38	6.38	1.88	6.19	6.19	2.04	5.99	5.99	2.22	5.55	5.55	2.41	5.20	5.20	2.66
	19°C	24°C	6.97	4.12	1.76	6.72	4.01	1.90	6.48	3.91	2.06	6.22	3.80	2.23	5.72	3.54	2.42	5.29	3.33	2.67
		27°C	6.97	4.71	1.76	6.73	4.61	1.90	6.48	4.50	2.06	6.23	4.39	2.23	5.72	4.11	2.42	5.29	3.89	2.67
		30°C	6.98	5.81	1.76	6.74	5.69	1.90	6.50	5.56	2.06	6.26	5.43	2.24	5.76	5.08	2.43	5.35	4.81	2.67
		33°C	7.07	7.07	1.76	6.84	6.84	1.91	6.62	6.62	2.07	6.39	6.39	2.24	5.91	5.91	2.44	5.53	5.53	2.69
	22°C	27°C	7.67	4.03	1.79	7.40	3.93	1.94	7.13	3.83	2.10	6.85	3.73	2.28	6.30	3.47	2.47	5.83	3.28	2.72
		30°C	7.67	4.91	1.79	7.40	4.81	1.94	7.13	4.70	2.10	6.85	4.59	2.28	6.30	4.29	2.47	5.84	4.07	2.72
		33°C	7.67	5.74	1.79	7.41	5.63	1.94	7.14	5.52	2.10	6.86	5.40	2.28	6.31	5.07	2.47	5.85	4.82	2.72
		36°C	7.70	6.51	1.79	7.44	6.37	1.94	7.19	6.24	2.10	6.92	6.10	2.28	6.39	5.72	2.48	5.94	5.43	2.73
660	16°C	21°C	6.57	4.60	1.74	6.34	4.48	1.89	6.10	4.36	2.04	5.85	4.24	2.21	5.37	3.95	2.40	4.95	3.72	2.65
		24°C	6.59	5.58	1.74	6.36	5.45	1.89	6.12	5.32	2.04	5.87	5.19	2.22	5.39	4.84	2.40	4.99	4.57	2.65
		27°C	6.67	6.34	1.75	6.45	6.19	1.89	6.23	6.04	2.05	6.00	5.86	2.22	5.54	5.44	2.41	5.16	5.09	2.66
		30°C	6.95	6.95	1.76	6.75	6.75	1.91	6.54	6.54	2.07	6.33	6.33	2.25	5.87	5.87	2.44	5.48	5.48	2.69
	19°C	24°C	7.24	4.35	1.77	6.98	4.24	1.92	6.72	4.13	2.08	6.45	4.02	2.25	5.93	3.74	2.44	5.47	3.53	2.69
		27°C	7.26	5.01	1.77	7.00	4.90	1.92	6.73	4.79	2.08	6.46	4.68	2.25	5.94	4.37	2.45	5.49	4.14	2.69
		30°C	7.29	6.18	1.77	7.04	6.05	1.92	6.78	5.91	2.08	6.52	5.77	2.26	6.01	5.40	2.45	5.57	5.10	2.70
		33°C	7.41	7.41	1.78	7.19	7.19	1.93	6.96	6.96	2.09	6.73	6.73	2.27	6.23	6.23	2.47	5.82	5.82	2.73
	22°C	27°C	7.96	4.26	1.80	7.68	4.16	1.95	7.39	4.06	2.12	7.10	3.95	2.30	6.52	3.68	2.49	6.03	3.47	2.74
		30°C	7.97	5.23	1.81	7.69	5.12	1.96	7.40	5.01	2.12	7.11	4.89	2.30	6.53	4.58	2.49	6.04	4.35	2.75
		33°C	7.98	6.13	1.81	7.70	6.01	1.96	7.42	5.89	2.12	7.13	5.76	2.30	6.56	5.41	2.50	6.08	5.13	2.75
		36°C	8.03	6.93	1.81	7.77	6.80	1.96	7.50	6.65	2.13	7.23	6.50	2.31	6.67	6.08	2.50	6.22	5.74	2.76
690	16°C	21°C	6.82	4.80	1.76	6.57	4.68	1.90	6.31	4.55	2.06	6.05	4.43	2.23	5.55	4.12	2.42	5.12	3.88	2.67
		24°C	6.85	5.83	1.76	6.60	5.69	1.90	6.35	5.55	2.06	6.10	5.41	2.23	5.60	5.05	2.42	5.17	4.76	2.67
		27°C	6.96	6.68	1.76	6.73	6.51	1.91	6.51	6.33	2.07	6.27	6.13	2.25	5.80	5.68	2.44	5.40	5.30	2.69
		30°C	7.31	7.31	1.78	7.10	7.10	1.93	6.88	6.88	2.09	6.65	6.65	2.27	6.16	6.16	2.47	5.75	5.75	2.72
	19°C	24°C	7.50	4.60	1.79	7.23	4.49	1.93	6.96	4.37	2.10	6.67	4.26	2.27	6.12	3.97	2.46	5.65	3.74	2.71
		27°C	7.52	5.33	1.79	7.25	5.20	1.94	6.98	5.08	2.10	6.70	4.96	2.27	6.15	4.64	2.47	5.69	4.39	2.72
		30°C	7.59	6.55	1.79	7.32	6.41	1.94	7.06	6.26	2.10	6.79	6.11	2.28	6.25	5.70	2.47	5.80	5.38	2.73
		33°C	7.75	7.75	1.80	7.52	7.52	1.95	7.29	7.29	2.12	7.05	7.05	2.30	6.53	6.53	2.50	6.11	6.11	2.76
	22°C	27°C	8.23	4.50	1.82	7.94	4.40	1.97	7.64	4.29	2.14	7.33	4.18	2.32	6.74	3.90	2.51	6.23	3.68	2.77
		30°C	8.25	5.55	1.82	7.96	5.45	1.97	7.66	5.33	2.14	7.35	5.21	2.32	6.75	4.88	2.51	6.24	4.62	2.77
		33°C	8.28	6.51	1.82	7.99	6.39	1.98	7.70	6.26	2.14	7.40	6.12	2.32	6.80	5.74	2.52	6.30	5.44	2.77
		36°C	8.35	7.35	1.83	8.09	7.21	1.98	7.81	7.05	2.15	7.53	6.88	2.33	6.96	6.42	2.53	6.49	6.04	2.79

Remark:
AFR: Air flow rate (CFM)
EWB: Entering Wet Bulb Temp. (˚C)
EDB: Entering Dry Bulb Temp. (˚C)
TC: Total Cooling Capacity (kW)
SHC: Sensible Heat Capacity (kW)
PI: Power Input

Notes:
1. Ratings shown are gross capacities which do not include a deduction for indoor fan motor heat.
2. shows nominal capacities.
3. Direct interpolation is permissible. Do not extrapolate.

Heating Mode

ID DB°C	Outdoor WB°C													
	-9		-6		-5		6		12		15		18	
	TC(kW)	SC(kW)	TC(kW)	SC(kW)	TC(kW)	SC(kW)	TC(kW)	SC(kW)	TC(kW)	SC(kW)	TC(kW)	SC(kW)	TC(kW)	SC(kW)
15	4.110	4.110	4.652	4.652	4.833	4.833	6.820	6.820	7.904	7.904	8.446	8.446	8.987	8.987
17	4.003	4.003	4.538	4.538	4.724	4.724	6.812	6.812	7.790	7.790	8.331	8.331	8.872	8.872
19	3.895	3.895	4.424	4.424	4.615	4.615	6.804	6.804	7.676	7.676	8.216	8.216	8.756	8.756
21	3.787	3.787	4.315	4.315	4.506	4.506	6.706	6.706	7.562	7.562	8.102	8.102	8.641	8.641
23	3.679	3.679	4.210	4.210	4.397	4.397	6.520	6.520	7.448	7.448	7.987	7.987	8.525	8.525
25	3.572	3.572	4.105	4.105	4.288	4.288	6.334	6.334	7.335	7.335	7.872	7.872	8.410	8.410
27	3.464	3.464	4.001	4.001	4.180	4.180	6.147	6.147	7.221	7.221	7.758	7.758	8.294	8.294
	FROST REGION													

Model: A5CC28CR - A5LC28CR
Cooling Mode

AFR (CFM)	EWB	EDB	Outdoor temperature																	
			19°C			25°C			30°C			35°C			40°C			46°C		
			TC	SHC	PI	TC	SHC	PI	TC	SHC	PI	TC	SHC	PI	TC	SHC	PI	TC	SHC	PI
710	16°C	21°C	7.19	5.09	2.20	6.93	4.95	2.38	6.68	4.82	2.57	6.41	4.68	2.79	5.88	4.36	3.03	5.43	4.10	3.34
		24°C	7.20	6.09	2.20	6.94	5.95	2.38	6.68	5.81	2.57	6.42	5.67	2.79	5.90	5.29	3.03	5.45	5.00	3.34
		27°C	7.25	6.91	2.20	7.01	6.75	2.38	6.77	6.59	2.58	6.51	6.42	2.80	6.01	5.98	3.04	5.59	5.59	3.35
		30°C	7.48	7.48	2.21	7.26	7.26	2.40	7.04	7.04	2.60	6.82	6.82	2.82	6.32	6.32	3.06	5.91	5.91	3.38
	19°C	24°C	7.93	4.75	2.23	7.65	4.63	2.42	7.37	4.51	2.62	7.08	4.38	2.84	6.50	4.08	3.08	6.01	3.84	3.40
		27°C	7.93	5.43	2.23	7.65	5.31	2.42	7.37	5.19	2.62	7.08	5.06	2.84	6.51	4.74	3.08	6.02	4.49	3.40
		30°C	7.95	6.71	2.23	7.67	6.56	2.42	7.40	6.42	2.62	7.12	6.26	2.84	6.55	5.86	3.09	6.08	5.54	3.40
		33°C	8.04	8.04	2.24	7.78	7.78	2.42	7.53	7.53	2.63	7.27	7.27	2.85	6.73	6.73	3.10	6.29	6.29	3.42
	22°C	27°C	8.72	4.65	2.27	8.42	4.54	2.46	8.11	4.42	2.67	7.80	4.30	2.90	7.17	4.01	3.14	6.64	3.78	3.46
		30°C	8.72	5.67	2.27	8.42	5.54	2.46	8.11	5.42	2.67	7.80	5.29	2.90	7.17	4.95	3.14	6.64	4.70	3.46
		33°C	8.73	6.62	2.27	8.43	6.49	2.46	8.12	6.36	2.67	7.80	6.23	2.90	7.18	5.85	3.14	6.66	5.56	3.46
		36°C	8.76	7.50	2.27	8.47	7.35	2.47	8.17	7.20	2.67	7.88	7.04	2.90	7.26	6.60	3.15	6.75	6.26	3.47
770	16°C	21°C	7.48	5.30	2.22	7.21	5.17	2.40	6.93	5.03	2.60	6.65	4.89	2.82	6.10	4.55	3.05	5.63	4.28	3.37
		24°C	7.50	6.44	2.22	7.23	6.29	2.40	6.96	6.14	2.60	6.68	5.98	2.82	6.13	5.58	3.06	5.67	5.27	3.37
		27°C	7.59	7.31	2.22	7.33	7.14	2.41	7.08	6.96	2.61	6.83	6.75	2.83	6.30	6.27	3.07	5.87	5.86	3.39
		30°C	7.91	7.91	2.24	7.68	7.68	2.43	7.44	7.44	2.63	7.20	7.20	2.86	6.67	6.67	3.10	6.24	6.24	3.43
	19°C	24°C	8.24	5.02	2.25	7.94	4.89	2.44	7.65	4.76	2.64	7.34	4.63	2.87	6.74	4.32	3.11	6.23	4.07	3.42
		27°C	8.25	5.78	2.25	7.96	5.65	2.44	7.66	5.52	2.64	7.35	5.39	2.87	6.75	5.04	3.11	6.24	4.77	3.43
		30°C	8.29	7.13	2.26	8.00	6.97	2.44	7.72	6.82	2.65	7.42	6.65	2.87	6.83	6.22	3.12	6.34	5.88	3.44
		33°C	8.43	8.43	2.26	8.17	8.17	2.45	7.91	7.91	2.66	7.65	7.65	2.89	7.08	7.08	3.14	6.62	6.62	3.47
	22°C	27°C	9.05	4.91	2.30	8.73	4.80	2.49	8.41	4.68	2.69	8.07	4.55	2.92	7.42	4.24	3.17	6.86	4.00	3.49
		30°C	9.06	6.03	2.30	8.74	5.90	2.49	8.42	5.77	2.70	8.08	5.64	2.92	7.43	5.28	3.17	6.87	5.01	3.49
		33°C	9.08	7.06	2.30	8.76	6.93	2.49	8.44	6.79	2.70	8.11	6.64	2.93	7.46	6.23	3.17	6.91	5.92	3.50
		36°C	9.13	7.98	2.30	8.84	7.83	2.49	8.53	7.67	2.70	8.22	7.49	2.93	7.58	7.01	3.18	7.07	6.61	3.51
810	16°C	21°C	7.75	5.53	2.24	7.47	5.39	2.42	7.18	5.25	2.62	6.88	5.10	2.84	6.31	4.75	3.08	5.82	4.47	3.39
		24°C	7.79	6.72	2.24	7.51	6.56	2.42	7.23	6.40	2.62	6.94	6.23	2.84	6.37	5.82	3.08	5.88	5.49	3.40
		27°C	7.92	7.70	2.24	7.66	7.50	2.43	7.40	7.29	2.63	7.14	7.07	2.86	6.59	6.55	3.10	6.14	6.11	3.42
		30°C	8.31	8.31	2.26	8.07	8.07	2.45	7.82	7.82	2.66	7.57	7.57	2.89	7.01	7.01	3.14	6.54	6.54	3.46
	19°C	24°C	8.53	5.31	2.27	8.22	5.18	2.46	7.91	5.04	2.66	7.59	4.91	2.89	6.96	4.57	3.13	6.43	4.31	3.45
		27°C	8.56	6.14	2.27	8.25	6.00	2.46	7.94	5.86	2.67	7.62	5.72	2.89	7.00	5.34	3.14	6.47	5.06	3.46
		30°C	8.63	7.56	2.28	8.32	7.39	2.47	8.02	7.22	2.67	7.72	7.04	2.90	7.11	6.58	3.15	6.60	6.20	3.47
		33°C	8.82	8.82	2.29	8.56	8.56	2.48	8.29	8.29	2.69	8.02	8.02	2.92	7.43	7.43	3.18	6.95	6.95	3.51
	22°C	27°C	9.36	5.19	2.32	9.03	5.08	2.51	8.69	4.95	2.72	8.34	4.82	2.95	7.66	4.50	3.20	7.08	4.25	3.52
		30°C	9.38	6.40	2.32	9.05	6.28	2.51	8.71	6.14	2.72	8.36	6.00	2.95	7.68	5.62	3.20	7.10	5.33	3.52
		33°C	9.41	7.50	2.32	9.09	7.37	2.51	8.75	7.21	2.72	8.41	7.05	2.95	7.74	6.61	3.20	7.17	6.28	3.53
		36°C	9.50	8.47	2.32	9.20	8.31	2.52	8.88	8.13	2.73	8.56	7.93	2.97	7.91	7.40	3.22	7.38	6.96	3.55
850	16°C	21°C	7.75	5.58	2.26	7.48	5.44	2.43	7.20	5.31	2.63	6.92	5.17	2.86	6.36	4.82	3.11	5.87	4.54	3.46
		24°C	7.78	6.82	2.26	7.50	6.68	2.43	7.23	6.53	2.63	6.95	6.37	2.86	6.39	5.96	3.11	5.92	5.62	3.46
		27°C	7.90	7.82	2.26	7.66	7.63	2.44	7.42	7.42	2.64	7.17	7.17	2.87	6.64	6.64	3.13	6.21	6.21	3.49
		30°C	8.33	8.33	2.29	8.10	8.10	2.46	7.86	7.86	2.67	7.62	7.62	2.90	7.07	7.07	3.17	6.62	6.62	3.52
	19°C	24°C	8.53	5.35	2.29	8.23	5.22	2.47	7.94	5.10	2.67	7.63	4.97	2.90	7.02	4.64	3.16	6.50	4.39	3.51
		27°C	8.55	6.20	2.30	8.25	6.07	2.47	7.96	5.95	2.67	7.65	5.82	2.90	7.04	5.45	3.16	6.52	5.18	3.51
		30°C	8.59	7.71	2.30	8.31	7.54	2.48	8.03	7.38	2.68	7.74	7.21	2.91	7.14	6.74	3.17	6.66	6.35	3.52
		33°C	8.82	8.82	2.31	8.57	8.57	2.49	8.33	8.33	2.70	8.08	8.08	2.93	7.50	7.50	3.20	7.04	7.04	3.56
	22°C	27°C	9.37	5.25	2.34	9.05	5.13	2.52	8.73	5.01	2.72	8.40	4.88	2.96	7.74	4.56	3.22	7.17	4.32	3.57
		30°C	9.39	6.49	2.34	9.07	6.36	2.52	8.75	6.22	2.73	8.42	6.09	2.96	7.75	5.71	3.22	7.19	5.43	3.57
		33°C	9.42	7.65	2.34	9.09	7.51	2.52	8.77	7.38	2.73	8.45	7.23	2.96	7.78	6.80	3.22	7.23	6.46	3.57
		36°C	9.50	8.66	2.35	9.20	8.49	2.53	8.91	8.32	2.74	8.62	8.11	2.97	7.98	7.58	3.24	7.47	7.16	3.60

Remark:
AFR: Air flow rate (CFM)
EWB: Entering Wet Bulb Temp. (˚C)
EDB: Entering Dry Bulb Temp. (˚C)

TC: Total Cooling Capacity (kW)
SHC: Sensible Heat Capacity (kW)
PI: Power Input

Notes:
1. Ratings shown are gross capacities which do not include a deduction for indoor fan motor heat.
2. shows nominal capacities.
3. Direct interpolation is permissible. Do not extrapolate.

Heating Mode

ID DB°C	Outdoor WB°C													
	-9		-6		-5		6		12		15		18	
	TC(kW)	SC(kW)	TC(kW)	SC(kW)	TC(kW)	SC(kW)	TC(kW)	SC(kW)	TC(kW)	SC(kW)	TC(kW)	SC(kW)	TC(kW)	SC(kW)
15	4.110	4.110	4.652	4.652	4.833	4.833	6.820	6.820	7.904	7.904	8.446	8.446	8.987	8.987
17	4.003	4.003	4.538	4.538	4.724	4.724	6.812	6.812	7.790	7.790	8.331	8.331	8.872	8.872
19	3.895	3.895	4.424	4.424	4.615	4.615	6.804	6.804	7.676	7.676	8.216	8.216	8.756	8.756
21	3.787	3.787	4.315	4.315	4.506	4.506	6.706	6.706	7.562	7.562	8.102	8.102	8.641	8.641
23	3.679	3.679	4.210	4.210	4.397	4.397	6.520	6.520	7.448	7.448	7.987	7.987	8.525	8.525
25	3.572	3.572	4.105	4.105	4.288	4.288	6.334	6.334	7.335	7.335	7.872	7.872	8.410	8.410
27	3.464	3.464	4.001	4.001	4.180	4.180	6.147	6.147	7.221	7.221	7.758	7.758	8.294	8.294
	FROST REGION													

Model: A5CC28CR - A5LC28CR (3 Phase)
Cooling Mode

AFR (CFM)	EWB	EDB	Outdoor temperature																	
			19°C			25°C			30°C			35°C			40°C			46°C		
			TC	SHC	PI	TC	SHC	PI	TC	SHC	PI	TC	SHC	PI	TC	SHC	PI	TC	SHC	PI
710	16°C	21°C	7.46	5.28	2.19	7.20	5.14	2.36	6.93	5.00	2.56	6.65	4.86	2.78	6.11	4.52	3.01	5.64	4.26	3.32
		24°C	7.47	6.32	2.19	7.21	6.18	2.36	6.94	6.04	2.56	6.66	5.89	2.78	6.12	5.50	3.01	5.66	5.19	3.32
		27°C	7.53	7.17	2.19	7.28	7.01	2.37	7.02	6.84	2.57	6.76	6.67	2.78	6.24	6.20	3.02	5.80	5.80	3.33
		30°C	7.76	7.76	2.20	7.54	7.54	2.38	7.31	7.31	2.58	7.07	7.07	2.80	6.56	6.56	3.05	6.14	6.14	3.37
	19°C	24°C	8.23	4.93	2.22	7.94	4.81	2.40	7.65	4.68	2.60	7.35	4.55	2.82	6.75	4.23	3.06	6.24	3.99	3.38
		27°C	8.24	5.64	2.22	7.95	5.51	2.40	7.65	5.39	2.60	7.35	5.26	2.82	6.76	4.92	3.06	6.25	4.66	3.38
		30°C	8.25	6.96	2.22	7.96	6.81	2.40	7.68	6.66	2.61	7.39	6.50	2.83	6.80	6.08	3.07	6.31	5.75	3.38
		33°C	8.35	8.35	2.23	8.07	8.07	2.41	7.81	7.81	2.61	7.55	7.55	2.84	6.98	6.98	3.08	6.53	6.53	3.40
	22°C	27°C	9.05	4.83	2.26	8.74	4.71	2.45	8.42	4.59	2.65	8.09	4.46	2.88	7.44	4.16	3.12	6.89	3.92	3.44
		30°C	9.06	5.88	2.26	8.74	5.76	2.45	8.42	5.62	2.65	8.09	5.49	2.88	7.44	5.14	3.12	6.89	4.87	3.44
		33°C	9.06	6.87	2.26	8.75	6.74	2.45	8.43	6.60	2.66	8.10	6.47	2.88	7.45	6.07	3.12	6.91	5.77	3.44
		36°C	9.09	7.79	2.26	8.79	7.63	2.45	8.49	7.47	2.66	8.18	7.31	2.89	7.54	6.85	3.13	7.01	6.50	3.45
770	16°C	21°C	7.76	5.50	2.20	7.48	5.36	2.38	7.20	5.22	2.58	6.90	5.07	2.80	6.33	4.72	3.04	5.84	4.45	3.35
		24°C	7.78	6.68	2.21	7.50	6.52	2.39	7.22	6.37	2.58	6.93	6.21	2.80	6.37	5.79	3.04	5.89	5.47	3.35
		27°C	7.88	7.59	2.21	7.61	7.41	2.39	7.35	7.22	2.59	7.09	7.01	2.81	6.54	6.51	3.05	6.10	6.09	3.37
		30°C	8.21	8.21	2.23	7.97	7.97	2.41	7.73	7.73	2.62	7.48	7.48	2.84	6.93	6.93	3.09	6.47	6.47	3.41
	19°C	24°C	8.55	5.21	2.24	8.25	5.08	2.43	7.94	4.94	2.63	7.62	4.81	2.85	7.00	4.48	3.09	6.46	4.22	3.41
		27°C	8.57	6.00	2.24	8.26	5.87	2.43	7.95	5.73	2.63	7.63	5.60	2.85	7.01	5.23	3.09	6.48	4.95	3.41
		30°C	8.61	7.40	2.24	8.31	7.24	2.43	8.01	7.08	2.63	7.70	6.90	2.86	7.09	6.46	3.10	6.58	6.10	3.42
		33°C	8.75	8.75	2.25	8.48	8.48	2.44	8.21	8.21	2.65	7.94	7.94	2.87	7.35	7.35	3.12	6.88	6.88	3.45
	22°C	27°C	9.39	5.10	2.28	9.06	4.98	2.47	8.73	4.85	2.68	8.38	4.72	2.91	7.70	4.40	3.15	7.12	4.16	3.47
		30°C	9.41	6.26	2.28	9.07	6.13	2.47	8.74	5.99	2.68	8.39	5.85	2.91	7.71	5.48	3.15	7.13	5.20	3.47
		33°C	9.42	7.33	2.28	9.10	7.19	2.47	8.76	7.04	2.68	8.42	6.89	2.91	7.74	6.47	3.16	7.18	6.14	3.48
		36°C	9.48	8.29	2.29	9.17	8.13	2.48	8.85	7.96	2.69	8.53	7.78	2.92	7.87	7.28	3.17	7.34	6.86	3.49
810	16°C	21°C	8.05	5.74	2.22	7.75	5.60	2.40	7.45	5.45	2.60	7.15	5.30	2.82	6.55	4.93	3.06	6.04	4.64	3.37
		24°C	8.09	6.98	2.23	7.80	6.81	2.41	7.50	6.65	2.61	7.20	6.47	2.83	6.61	6.04	3.07	6.11	5.69	3.38
		27°C	8.22	8.00	2.23	7.95	7.79	2.42	7.68	7.57	2.62	7.41	7.34	2.84	6.84	6.80	3.08	6.38	6.35	3.40
		30°C	8.63	8.63	2.25	8.38	8.38	2.44	8.12	8.12	2.65	7.85	7.85	2.87	7.27	7.27	3.12	6.79	6.79	3.44
	19°C	24°C	8.86	5.51	2.26	8.54	5.37	2.45	8.21	5.23	2.65	7.88	5.09	2.87	7.23	4.75	3.12	6.67	4.48	3.43
		27°C	8.88	6.37	2.26	8.56	6.23	2.45	8.24	6.08	2.65	7.91	5.93	2.88	7.26	5.55	3.12	6.71	5.25	3.44
		30°C	8.96	7.84	2.27	8.64	7.67	2.45	8.33	7.50	2.66	8.01	7.31	2.88	7.38	6.83	3.13	6.85	6.43	3.45
		33°C	9.15	9.15	2.28	8.88	8.88	2.47	8.61	8.61	2.68	8.33	8.33	2.91	7.71	7.71	3.16	7.21	7.21	3.49
	22°C	27°C	9.72	5.39	2.30	9.37	5.27	2.49	9.02	5.14	2.70	8.66	5.00	2.93	7.95	4.67	3.18	7.35	4.41	3.50
		30°C	9.74	6.64	2.30	9.39	6.52	2.50	9.04	6.38	2.70	8.68	6.23	2.93	7.97	5.83	3.18	7.37	5.53	3.50
		33°C	9.77	7.79	2.31	9.44	7.65	2.50	9.09	7.49	2.71	8.73	7.32	2.94	8.03	6.86	3.19	7.44	6.51	3.51
		36°C	9.86	8.79	2.31	9.55	8.63	2.51	9.22	8.44	2.72	8.89	8.23	2.95	8.21	7.68	3.20	7.66	7.23	3.53
850	16°C	21°C	8.04	5.79	2.24	7.76	5.65	2.42	7.48	5.51	2.61	7.18	5.37	2.84	6.60	5.00	3.09	6.10	4.71	3.44
		24°C	8.07	7.08	2.25	7.78	6.93	2.42	7.50	6.78	2.62	7.21	6.62	2.84	6.63	6.19	3.10	6.14	5.84	3.44
		27°C	8.21	8.12	2.25	7.95	7.92	2.43	7.70	7.70	2.63	7.44	7.44	2.86	6.89	6.89	3.12	6.44	6.44	3.47
		30°C	8.65	8.65	2.27	8.40	8.40	2.45	8.16	8.16	2.65	7.91	7.91	2.89	7.34	7.34	3.15	6.87	6.87	3.50
	19°C	24°C	8.85	5.55	2.28	8.55	5.42	2.46	8.24	5.29	2.66	7.92	5.16	2.89	7.29	4.82	3.14	6.74	4.55	3.49
		27°C	8.88	6.44	2.28	8.57	6.31	2.46	8.26	6.17	2.66	7.94	6.04	2.89	7.31	5.66	3.15	6.76	5.37	3.49
		30°C	8.92	8.00	2.29	8.62	7.83	2.46	8.33	7.66	2.66	8.03	7.48	2.89	7.42	6.99	3.15	6.91	6.59	3.50
		33°C	9.16	9.16	2.30	8.90	8.90	2.48	8.65	8.65	2.68	8.39	8.39	2.92	7.79	7.79	3.18	7.30	7.30	3.54
	22°C	27°C	9.73	5.45	2.33	9.39	5.32	2.51	9.07	5.20	2.71	8.72	5.07	2.94	8.03	4.74	3.20	7.44	4.48	3.55
		30°C	9.75	6.74	2.33	9.42	6.60	2.51	9.08	6.46	2.71	8.74	6.32	2.94	8.05	5.93	3.20	7.46	5.64	3.55
		33°C	9.77	7.94	2.33	9.44	7.80	2.51	9.10	7.66	2.71	8.77	7.51	2.94	8.08	7.05	3.20	7.51	6.70	3.55
		36°C	9.87	8.99	2.33	9.55	8.82	2.51	9.24	8.63	2.72	8.94	8.42	2.96	8.28	7.87	3.22	7.75	7.43	3.58

Remark:
AFR: Air flow rate (CFM)
EWB: Entering Wet Bulb Temp. (˚C)
EDB: Entering Dry Bulb Temp. (˚C)
TC: Total Cooling Capacity (kW)
SHC: Sensible Heat Capacity (kW)
PI: Power Input

Notes:
1. Ratings shown are gross capacities which do not include a deduction for indoor fan motor heat.
2. shows nominal capacities.
3. Direct interpolation is permissible. Do not extrapolate.

Heating Mode

ID DB°C	Outdoor WB°C													
	-9		-6		-5		6		12		15		18	
	TC(kW)	SC(kW)	TC(kW)	SC(kW)	TC(kW)	SC(kW)	TC(kW)	SC(kW)	TC(kW)	SC(kW)	TC(kW)	SC(kW)	TC(kW)	SC(kW)
15	4.961	4.961	5.615	5.615	5.833	5.833	8.231	8.231	9.539	9.539	10.193	10.193	10.847	10.847
17	4.831	4.831	5.467	5.467	5.700	5.700	8.221	8.221	9.396	9.396	10.048	10.048	10.700	10.700
19	4.701	4.701	5.320	5.320	5.568	5.568	8.211	8.211	9.252	9.252	9.903	9.903	10.553	10.553
21	4.571	4.571	5.186	5.186	5.435	5.435	8.090	8.090	9.109	9.109	9.757	9.757	10.406	10.406
23	4.441	4.441	5.065	5.065	5.303	5.303	7.858	7.858	8.966	8.966	9.612	9.612	10.259	10.259
25	4.311	4.311	4.944	4.944	5.170	5.170	7.626	7.626	8.823	8.823	9.467	9.467	10.112	10.112
27	4.181	4.181	4.823	4.823	5.038	5.038	7.394	7.394	8.679	8.679	9.322	9.322	9.965	9.965
	FROST REGION													

Model: A5CC38CR - A5LC~~35CR~~ 35DR
Cooling Mode

AFR (CFM)	EWB	EDB	Outdoor temperature																	
			19°C			25°C			30°C			35°C			40°C			46°C		
			TC	SHC	PI	TC	SHC	PI	TC	SHC	PI	TC	SHC	PI	TC	SHC	PI	TC	SHC	PI
920	16°C	21°C	9.14	5.00	3.05	8.81	4.87	3.05	8.47	4.75	3.12	8.13	4.61	3.20	7.76	4.48	3.40	7.31	4.31	3.69
		24°C	9.18	6.07	3.05	8.84	5.93	3.06	8.51	5.80	3.12	8.16	5.66	3.20	7.81	5.52	3.41	7.36	5.33	3.69
		27°C	9.29	7.01	3.05	8.99	6.84	3.06	8.69	6.66	3.13	8.38	6.46	3.22	8.07	6.23	3.43	7.69	5.95	3.72
		30°C	9.76	7.52	3.07	9.48	7.30	3.09	9.20	7.09	3.16	8.90	6.86	3.25	8.58	6.63	3.47	8.19	6.33	3.77
	19°C	24°C	10.06	4.98	3.09	9.70	4.86	3.10	9.33	4.73	3.17	8.96	4.61	3.26	8.57	4.48	3.46	8.08	4.31	3.76
		27°C	10.09	6.08	3.09	9.73	5.94	3.10	9.37	5.81	3.17	8.99	5.68	3.26	8.60	5.54	3.47	8.11	5.37	3.76
		30°C	10.14	7.11	3.09	9.78	6.96	3.11	9.43	6.82	3.17	9.07	6.66	3.26	8.69	6.49	3.47	8.24	6.27	3.77
		33°C	10.34	7.92	3.10	10.03	7.72	3.12	9.73	7.50	3.19	9.42	7.27	3.29	9.10	7.03	3.51	8.70	6.73	3.81
	22°C	27°C	11.04	4.93	3.13	10.65	4.82	3.15	10.26	4.69	3.22	9.85	4.57	3.32	9.42	4.45	3.53	8.90	4.29	3.83
		30°C	11.07	6.05	3.13	10.68	5.92	3.15	10.28	5.79	3.23	9.87	5.66	3.32	9.45	5.53	3.54	8.92	5.36	3.83
		33°C	11.10	7.10	3.14	10.71	6.96	3.16	10.31	6.84	3.23	9.90	6.70	3.32	9.48	6.56	3.54	8.97	6.38	3.84
		36°C	11.17	8.08	3.14	10.79	7.92	3.16	10.42	7.76	3.24	10.05	7.58	3.33	9.67	7.38	3.55	9.22	7.11	3.86
1050	16°C	21°C	9.38	5.27	3.06	9.04	5.13	3.07	8.69	5.00	3.13	8.33	4.85	3.22	7.96	4.71	3.42	7.50	4.52	3.71
		24°C	9.42	6.40	3.06	9.07	6.25	3.07	8.73	6.11	3.13	8.37	5.96	3.22	8.00	5.80	3.42	7.55	5.60	3.71
		27°C	9.53	7.39	3.07	9.22	7.20	3.08	8.91	7.01	3.14	8.59	6.79	3.23	8.27	6.56	3.44	7.88	6.25	3.74
		30°C	10.02	7.92	3.09	9.73	7.69	3.11	9.43	7.46	3.18	9.12	7.22	3.27	8.80	6.97	3.48	8.39	6.65	3.79
	19°C	24°C	10.32	5.25	3.10	9.95	5.12	3.12	9.57	4.98	3.18	9.19	4.85	3.27	8.78	4.71	3.48	8.28	4.53	3.78
		27°C	10.36	6.40	3.10	9.98	6.26	3.12	9.60	6.12	3.19	9.22	5.97	3.27	8.81	5.83	3.48	8.31	5.64	3.78
		30°C	10.40	7.49	3.11	10.03	7.33	3.12	9.67	7.18	3.19	9.29	7.01	3.28	8.91	6.83	3.49	8.45	6.59	3.79
		33°C	10.61	8.35	3.12	10.29	8.13	3.14	9.98	7.90	3.21	9.66	7.65	3.31	9.33	7.39	3.53	8.91	7.07	3.83
	22°C	27°C	11.33	5.20	3.15	10.92	5.07	3.17	10.52	4.94	3.24	10.10	4.81	3.34	9.66	4.67	3.55	9.12	4.51	3.85
		30°C	11.36	6.38	3.15	10.95	6.24	3.17	10.54	6.10	3.24	10.12	5.96	3.34	9.69	5.81	3.55	9.15	5.64	3.85
		33°C	11.39	7.48	3.15	10.98	7.34	3.17	10.57	7.20	3.25	10.15	7.05	3.34	9.72	6.90	3.56	9.19	6.71	3.86
		36°C	11.46	8.51	3.15	11.07	8.34	3.18	10.69	8.17	3.25	10.30	7.98	3.35	9.92	7.76	3.57	9.45	7.47	3.88
1160	16°C	21°C	9.55	5.46	3.07	9.20	5.32	3.08	8.85	5.18	3.14	8.48	5.03	3.23	8.10	4.88	3.43	7.63	4.68	3.72
		24°C	9.59	6.63	3.08	9.23	6.48	3.08	8.88	6.33	3.15	8.52	6.17	3.23	8.15	6.01	3.44	7.68	5.80	3.73
		27°C	9.70	7.66	3.08	9.38	7.47	3.09	9.07	7.26	3.16	8.74	7.04	3.25	8.42	6.79	3.46	8.02	6.47	3.76
		30°C	10.20	8.22	3.10	9.90	7.98	3.12	9.60	7.73	3.19	9.28	7.48	3.28	8.95	7.22	3.50	8.54	6.89	3.80
	19°C	24°C	10.51	5.44	3.11	10.13	5.31	3.13	9.74	5.17	3.20	9.35	5.02	3.28	8.94	4.87	3.49	8.43	4.69	3.79
		27°C	10.54	6.64	3.12	10.16	6.49	3.13	9.78	6.34	3.20	9.38	6.19	3.29	8.97	6.03	3.50	8.46	5.84	3.79
		30°C	10.59	7.77	3.12	10.21	7.61	3.13	9.84	7.44	3.20	9.46	7.26	3.29	9.07	7.07	3.50	8.60	6.82	3.80
		33°C	10.80	8.66	3.13	10.48	8.43	3.15	10.16	8.19	3.22	9.83	7.93	3.32	9.50	7.65	3.54	9.07	7.31	3.85
	22°C	27°C	11.53	5.39	3.16	11.12	5.26	3.18	10.70	5.12	3.25	10.28	4.98	3.35	9.83	4.84	3.56	9.28	4.66	3.86
		30°C	11.56	6.61	3.16	11.15	6.47	3.18	10.73	6.32	3.26	10.30	6.17	3.35	9.86	6.02	3.57	9.31	5.83	3.87
		33°C	11.59	7.76	3.16	11.18	7.61	3.18	10.76	7.46	3.26	10.33	7.31	3.35	9.90	7.15	3.57	9.36	6.94	3.87
		36°C	11.67	8.83	3.17	11.27	8.65	3.19	10.88	8.47	3.27	10.48	8.27	3.36	10.09	8.04	3.59	9.62	7.73	3.90
1280	16°C	21°C	9.66	5.60	3.08	9.31	5.45	3.09	8.95	5.30	3.15	8.58	5.15	3.23	8.20	4.99	3.44	7.72	4.79	3.73
		24°C	9.70	6.80	3.08	9.34	6.64	3.09	8.99	6.48	3.15	8.62	6.32	3.24	8.24	6.15	3.44	7.77	5.93	3.73
		27°C	9.82	7.85	3.09	9.49	7.65	3.10	9.17	7.44	3.16	8.85	7.21	3.25	8.52	6.95	3.46	8.12	6.61	3.76
		30°C	10.32	8.42	3.11	10.02	8.17	3.12	9.71	7.92	3.19	9.39	7.66	3.29	9.06	7.39	3.50	8.64	7.04	3.81
	19°C	24°C	10.63	5.58	3.12	10.25	5.43	3.14	9.86	5.29	3.20	9.46	5.14	3.29	9.04	4.99	3.50	8.53	4.80	3.80
		27°C	10.67	6.81	3.12	10.28	6.65	3.14	9.89	6.50	3.20	9.49	6.34	3.29	9.07	6.17	3.51	8.56	5.97	3.80
		30°C	10.71	7.96	3.12	10.33	7.79	3.14	9.95	7.62	3.21	9.57	7.43	3.30	9.18	7.24	3.51	8.70	6.97	3.81
		33°C	10.93	8.87	3.13	10.60	8.64	3.15	10.28	8.38	3.23	9.95	8.11	3.33	9.61	7.83	3.55	9.18	7.48	3.86
	22°C	27°C	11.67	5.53	3.17	11.25	5.39	3.19	10.83	5.25	3.26	10.40	5.10	3.36	9.95	4.95	3.57	9.39	4.77	3.87
		30°C	11.70	6.78	3.17	11.28	6.62	3.19	10.85	6.47	3.26	10.42	6.32	3.36	9.97	6.16	3.57	9.42	5.97	3.88
		33°C	11.73	7.95	3.17	11.31	7.79	3.19	10.89	7.64	3.27	10.45	7.48	3.36	10.01	7.31	3.58	9.47	7.10	3.88
		36°C	11.81	9.04	3.17	11.40	8.86	3.20	11.00	8.67	3.27	10.61	8.46	3.37	10.21	8.23	3.59	9.73	7.91	3.91

Remark:
AFR: Air flow rate (CFM)
EWB: Entering Wet Bulb Temp. (˚C)
EDB: Entering Dry Bulb Temp. (˚C)

TC: Total Cooling Capacity (kW)
SHC: Sensible Heat Capacity (kW)
PI: Power Input

Notes:
1. Ratings shown are gross capacities which do not include a deduction for indoor fan motor heat.
2. shows nominal capacities.
3. Direct interpolation is permissible. Do not extrapolate.

Heating Mode

ID DB°C	Outdoor WB°C													
	-9		-6		-5		6		12		15		18	
	TC(kW)	SC(kW)	TC(kW)	SC(kW)	TC(kW)	SC(kW)	TC(kW)	SC(kW)	TC(kW)	SC(kW)	TC(kW)	SC(kW)	TC(kW)	SC(kW)
15	4.695	4.695	5.314	5.314	5.520	5.520	7.790	7.790	9.028	9.028	9.647	9.647	10.266	10.266
17	4.572	4.572	5.064	5.064	5.408	5.408	7.781	7.781	8.961	8.961	9.589	9.589	10.216	10.216
19	4.449	4.449	4.814	4.814	5.296	5.296	7.771	7.771	8.895	8.895	9.530	9.530	10.165	10.165
21	4.326	4.326	4.680	4.680	5.184	5.184	7.699	7.699	8.829	8.829	9.472	9.472	10.115	10.115
23	4.203	4.203	4.661	4.661	5.071	5.071	7.564	7.564	8.762	8.762	9.414	9.414	10.065	10.065
25	4.080	4.080	4.643	4.643	4.959	4.959	7.429	7.429	8.696	8.696	9.356	9.356	10.015	10.015
27	3.957	3.957	4.624	4.624	4.847	4.847	7.295	7.295	8.630	8.630	9.297	9.297	9.965	9.965
	FROST REGION													

Model: A5CC38CR - A5LC~~35CR~~R (3 Phase)

Cooling Mode 35DR

AFR (CFM)	EWB	EDB	Outdoor temperature																	
			19°C			25°C			30°C			35°C			40°C			46°C		
			TC	SHC	PI	TC	SHC	PI	TC	SHC	PI	TC	SHC	PI	TC	SHC	PI	TC	SHC	PI
920	16°C	21°C	9.42	5.15	3.18	9.08	5.02	3.19	8.74	4.89	3.25	8.38	4.76	3.34	8.00	4.62	3.55	7.54	4.44	3.85
		24°C	9.46	6.26	3.18	9.12	6.12	3.19	8.77	5.98	3.25	8.42	5.84	3.34	8.05	5.69	3.55	7.59	5.50	3.85
		27°C	9.58	7.23	3.18	9.26	7.05	3.19	8.96	6.86	3.26	8.64	6.66	3.35	8.32	6.43	3.57	7.93	6.13	3.88
		30°C	10.07	7.75	3.20	9.78	7.53	3.22	9.48	7.31	3.29	9.17	7.07	3.39	8.85	6.83	3.61	8.44	6.53	3.93
	19°C	24°C	10.37	5.14	3.22	10.00	5.01	3.23	9.62	4.88	3.30	9.24	4.75	3.39	8.83	4.61	3.61	8.33	4.45	3.92
		27°C	10.40	6.26	3.22	10.03	6.13	3.23	9.66	5.99	3.30	9.27	5.85	3.40	8.86	5.71	3.61	8.36	5.54	3.92
		30°C	10.45	7.33	3.22	10.08	7.18	3.24	9.72	7.03	3.31	9.35	6.87	3.40	8.96	6.69	3.62	8.50	6.46	3.93
		33°C	10.66	8.17	3.23	10.34	7.96	3.25	10.04	7.73	3.33	9.72	7.49	3.43	9.38	7.25	3.66	8.96	6.93	3.98
	22°C	27°C	11.38	5.09	3.27	10.98	4.96	3.29	10.57	4.84	3.36	10.15	4.71	3.46	9.72	4.58	3.68	9.17	4.42	3.99
		30°C	11.41	6.24	3.27	11.01	6.10	3.29	10.60	5.97	3.36	10.18	5.84	3.46	9.74	5.70	3.69	9.20	5.53	4.00
		33°C	11.44	7.32	3.27	11.04	7.18	3.29	10.63	7.05	3.37	10.21	6.91	3.47	9.78	6.77	3.69	9.24	6.58	4.00
		36°C	11.52	8.32	3.27	11.13	8.16	3.30	10.74	8.00	3.37	10.36	7.82	3.48	9.97	7.61	3.71	9.51	7.33	4.03
1050	16°C	21°C	9.67	5.43	3.19	9.32	5.29	3.20	8.96	5.15	3.27	8.59	5.00	3.35	8.21	4.85	3.57	7.73	4.66	3.87
		24°C	9.71	6.59	3.19	9.35	6.44	3.20	9.00	6.30	3.27	8.63	6.14	3.36	8.25	5.98	3.57	7.78	5.77	3.87
		27°C	9.82	7.62	3.20	9.50	7.43	3.21	9.18	7.22	3.28	8.86	7.00	3.37	8.53	6.76	3.59	8.13	6.44	3.90
		30°C	10.33	8.17	3.22	10.03	7.93	3.24	9.72	7.69	3.31	9.40	7.44	3.41	9.07	7.18	3.63	8.65	6.86	3.95
	19°C	24°C	10.64	5.41	3.23	10.26	5.27	3.25	9.87	5.14	3.32	9.47	5.00	3.41	9.05	4.85	3.63	8.54	4.67	3.94
		27°C	10.68	6.60	3.24	10.29	6.45	3.25	9.90	6.31	3.32	9.50	6.16	3.41	9.08	6.01	3.63	8.57	5.82	3.94
		30°C	10.72	7.72	3.24	10.34	7.56	3.25	9.96	7.40	3.32	9.58	7.22	3.42	9.19	7.04	3.64	8.71	6.79	3.95
		33°C	10.94	8.61	3.25	10.61	8.38	3.27	10.29	8.14	3.35	9.96	7.88	3.45	9.62	7.62	3.68	9.19	7.28	4.00
	22°C	27°C	11.68	5.36	3.28	11.26	5.23	3.30	10.84	5.10	3.38	10.41	4.96	3.48	9.96	4.82	3.70	9.40	4.65	4.02
		30°C	11.71	6.57	3.28	11.29	6.43	3.31	10.87	6.29	3.38	10.43	6.14	3.48	9.99	5.99	3.71	9.43	5.81	4.02
		33°C	11.74	7.71	3.29	11.32	7.56	3.31	10.90	7.42	3.38	10.47	7.27	3.48	10.02	7.11	3.71	9.48	6.91	4.02
		36°C	11.82	8.77	3.29	11.41	8.60	3.31	11.02	8.42	3.39	10.62	8.23	3.49	10.22	8.00	3.73	9.75	7.70	4.05
1160	16°C	21°C	9.84	5.63	3.20	9.48	5.49	3.21	9.12	5.34	3.28	8.74	5.19	3.37	8.35	5.03	3.58	7.86	4.83	3.88
		24°C	9.89	6.84	3.21	9.52	6.68	3.22	9.16	6.53	3.28	8.78	6.37	3.37	8.40	6.20	3.58	7.92	5.98	3.89
		27°C	10.00	7.90	3.21	9.67	7.70	3.22	9.35	7.49	3.29	9.01	7.26	3.38	8.68	7.00	3.60	8.27	6.67	3.92
		30°C	10.52	8.47	3.23	10.21	8.22	3.25	9.89	7.97	3.32	9.57	7.71	3.42	9.23	7.44	3.65	8.81	7.10	3.96
	19°C	24°C	10.83	5.61	3.25	10.44	5.47	3.26	10.04	5.32	3.33	9.64	5.18	3.42	9.21	5.02	3.64	8.69	4.84	3.95
		27°C	10.87	6.85	3.25	10.47	6.69	3.26	10.08	6.54	3.33	9.67	6.38	3.43	9.25	6.22	3.65	8.72	6.02	3.95
		30°C	10.92	8.01	3.25	10.52	7.84	3.27	10.14	7.67	3.34	9.75	7.49	3.43	9.35	7.29	3.65	8.86	7.03	3.97
		33°C	11.14	8.93	3.26	10.80	8.69	3.28	10.47	8.44	3.36	10.14	8.17	3.46	9.79	7.89	3.69	9.35	7.54	4.01
	22°C	27°C	11.89	5.56	3.29	11.46	5.42	3.32	11.03	5.28	3.39	10.59	5.14	3.49	10.14	4.99	3.72	9.57	4.81	4.03
		30°C	11.92	6.82	3.30	11.49	6.67	3.32	11.06	6.52	3.39	10.62	6.36	3.49	10.16	6.21	3.72	9.60	6.01	4.03
		33°C	11.95	8.00	3.30	11.52	7.84	3.32	11.09	7.69	3.40	10.65	7.53	3.50	10.20	7.37	3.72	9.64	7.15	4.04
		36°C	12.03	9.10	3.30	11.62	8.92	3.33	11.21	8.73	3.40	10.81	8.52	3.51	10.40	8.29	3.74	9.92	7.97	4.06
1280	16°C	21°C	9.96	5.77	3.21	9.59	5.62	3.22	9.23	5.47	3.29	8.85	5.31	3.37	8.45	5.15	3.59	7.96	4.94	3.89
		24°C	10.00	7.01	3.21	9.63	6.85	3.22	9.26	6.69	3.29	8.89	6.52	3.38	8.49	6.34	3.59	8.01	6.11	3.89
		27°C	10.12	8.10	3.22	9.79	7.89	3.23	9.46	7.67	3.30	9.12	7.43	3.39	8.78	7.16	3.61	8.37	6.82	3.92
		30°C	10.64	8.68	3.24	10.33	8.42	3.26	10.01	8.17	3.33	9.68	7.90	3.43	9.34	7.61	3.65	8.91	7.26	3.97
	19°C	24°C	10.96	5.75	3.25	10.56	5.60	3.27	10.16	5.45	3.34	9.75	5.30	3.43	9.32	5.14	3.65	8.79	4.95	3.96
		27°C	11.00	7.02	3.26	10.60	6.86	3.27	10.20	6.70	3.34	9.78	6.53	3.43	9.35	6.37	3.65	8.82	6.16	3.96
		30°C	11.04	8.20	3.26	10.65	8.03	3.27	10.26	7.86	3.34	9.87	7.66	3.44	9.46	7.46	3.66	8.97	7.19	3.97
		33°C	11.27	9.15	3.27	10.93	8.91	3.29	10.60	8.64	3.37	10.26	8.36	3.47	9.90	8.07	3.70	9.46	7.71	4.02
	22°C	27°C	12.03	5.70	3.30	11.60	5.55	3.32	11.16	5.41	3.40	10.72	5.26	3.50	10.26	5.11	3.72	9.68	4.92	4.04
		30°C	12.06	6.99	3.30	11.63	6.83	3.33	11.19	6.67	3.40	10.75	6.51	3.50	10.28	6.35	3.73	9.71	6.15	4.04
		33°C	12.09	8.19	3.30	11.66	8.03	3.33	11.22	7.88	3.40	10.78	7.71	3.50	10.32	7.54	3.73	9.76	7.32	4.05
		36°C	12.17	9.32	3.31	11.75	9.13	3.33	11.35	8.94	3.41	10.94	8.72	3.52	10.53	8.48	3.75	10.03	8.15	4.07

Remark:
AFR: Air flow rate (CFM)
EWB: Entering Wet Bulb Temp. (˚C)
EDB: Entering Dry Bulb Temp. (˚C)

TC: Total Cooling Capacity (kW)
SHC: Sensible Heat Capacity (kW)
PI: Power Input

Notes:
1. Ratings shown are gross capacities which do not include a deduction for indoor fan motor heat.
2. shows nominal capacities.
3. Direct interpolation is permissible. Do not extrapolate.

Heating Mode

ID DB°C	Outdoor WB°C													
	-9		-6		-5		6		12		15		18	
	TC(kW)	SC(kW)	TC(kW)	SC(kW)	TC(kW)	SC(kW)	TC(kW)	SC(kW)	TC(kW)	SC(kW)	TC(kW)	SC(kW)	TC(kW)	SC(kW)
15	4.695	4.695	5.314	5.314	5.520	5.520	7.790	7.790	9.028	9.028	9.647	9.647	10.266	10.266
17	4.572	4.572	5.064	5.064	5.408	5.408	7.781	7.781	8.961	8.961	9.589	9.589	10.216	10.216
19	4.449	4.449	4.814	4.814	5.296	5.296	7.771	7.771	8.895	8.895	9.530	9.530	10.165	10.165
21	4.326	4.326	4.680	4.680	5.184	5.184	7.699	7.699	8.829	8.829	9.472	9.472	10.115	10.115
23	4.203	4.203	4.661	4.661	5.071	5.071	7.564	7.564	8.762	8.762	9.414	9.414	10.065	10.065
25	4.080	4.080	4.643	4.643	4.959	4.959	7.429	7.429	8.696	8.696	9.356	9.356	10.015	10.015
27	3.957	3.957	4.624	4.624	4.847	4.847	7.295	7.295	8.630	8.630	9.297	9.297	9.965	9.965
	FROST REGION													

Model: A5CC38CR - A5LC~~40CR~~ 40DR
Cooling Mode

AFR (CFM)	EWB	EDB	Outdoor temperature																	
			19°C			25°C			30°C			35°C			40°C			46°C		
			TC	SHC	PI	TC	SHC	PI	TC	SHC	PI	TC	SHC	PI	TC	SHC	PI	TC	SHC	PI
920	16°C	21°C	11.14	6.09	3.97	10.73	5.94	3.98	10.33	5.78	4.06	9.90	5.62	4.17	9.46	5.46	4.44	8.91	5.25	4.81
		24°C	11.19	7.40	3.98	10.78	7.23	3.99	10.37	7.07	4.07	9.95	6.90	4.18	9.51	6.73	4.44	8.97	6.50	4.82
		27°C	11.32	8.54	3.98	10.95	8.33	4.00	10.58	8.11	4.08	10.21	7.87	4.19	9.84	7.60	4.47	9.37	7.25	4.86
		30°C	11.90	9.16	4.01	11.56	8.90	4.03	11.21	8.64	4.12	10.84	8.36	4.24	10.46	8.08	4.52	9.98	7.72	4.91
	19°C	24°C	12.26	6.07	4.03	11.82	5.92	4.04	11.38	5.77	4.13	10.92	5.61	4.25	10.44	5.45	4.52	9.84	5.26	4.90
		27°C	12.30	7.40	4.03	11.86	7.24	4.05	11.41	7.08	4.13	10.95	6.92	4.25	10.47	6.75	4.52	9.88	6.55	4.90
		30°C	12.35	8.66	4.03	11.91	8.48	4.05	11.49	8.31	4.14	11.05	8.12	4.26	10.59	7.91	4.53	10.04	7.64	4.92
		33°C	12.60	9.65	4.04	12.23	9.41	4.07	11.86	9.14	4.16	11.48	8.86	4.29	11.09	8.56	4.57	10.60	8.19	4.98
	22°C	27°C	13.45	6.01	4.09	12.98	5.87	4.11	12.50	5.72	4.21	12.00	5.57	4.33	11.48	5.42	4.61	10.84	5.23	5.00
		30°C	13.49	7.37	4.09	13.01	7.22	4.11	12.53	7.06	4.21	12.03	6.90	4.33	11.51	6.74	4.61	10.87	6.54	5.00
		33°C	13.53	8.65	4.09	13.05	8.49	4.12	12.56	8.33	4.21	12.06	8.17	4.34	11.56	8.00	4.62	10.93	7.78	5.01
		36°C	13.61	9.84	4.09	13.15	9.65	4.12	12.70	9.46	4.22	12.24	9.24	4.35	11.79	9.00	4.64	11.24	8.66	5.04
1050	16°C	21°C	11.43	6.42	3.99	11.01	6.25	4.01	10.59	6.09	4.08	10.15	5.92	4.19	9.70	5.74	4.46	9.13	5.51	4.84
		24°C	11.48	7.79	4.00	11.05	7.62	4.01	10.63	7.44	4.09	10.20	7.26	4.20	9.75	7.07	4.47	9.20	6.83	4.84
		27°C	11.61	9.00	4.00	11.23	8.78	4.02	10.85	8.54	4.10	10.47	8.28	4.22	10.08	7.99	4.49	9.61	7.61	4.88
		30°C	12.21	9.65	4.03	11.85	9.37	4.05	11.49	9.09	4.14	11.12	8.80	4.26	10.72	8.49	4.54	10.23	8.11	4.94
	19°C	24°C	12.58	6.40	4.05	12.12	6.23	4.06	11.66	6.07	4.15	11.19	5.91	4.27	10.70	5.73	4.54	10.09	5.52	4.93
		27°C	12.62	7.80	4.05	12.16	7.63	4.07	11.70	7.46	4.15	11.23	7.28	4.27	10.74	7.10	4.55	10.13	6.88	4.93
		30°C	12.67	9.12	4.05	12.22	8.94	4.07	11.78	8.75	4.16	11.33	8.54	4.28	10.86	8.32	4.55	10.29	8.02	4.94
		33°C	12.93	10.17	4.06	12.54	9.91	4.09	12.16	9.62	4.19	11.78	9.32	4.31	11.37	9.01	4.60	10.86	8.61	5.00
	22°C	27°C	13.80	6.33	4.11	13.31	6.18	4.13	12.81	6.02	4.23	12.30	5.86	4.35	11.77	5.70	4.63	11.12	5.49	5.02
		30°C	13.84	7.77	4.11	13.34	7.60	4.14	12.85	7.43	4.23	12.33	7.26	4.35	11.80	7.08	4.64	11.15	6.87	5.03
		33°C	13.88	9.11	4.11	13.38	8.94	4.14	12.88	8.77	4.23	12.37	8.59	4.36	11.85	8.41	4.64	11.20	8.17	5.03
		36°C	13.97	10.37	4.11	13.49	10.16	4.14	13.02	9.95	4.24	12.55	9.72	4.37	12.08	9.46	4.66	11.52	9.10	5.07
1160	16°C	21°C	11.64	6.66	4.01	11.21	6.48	4.02	10.78	6.31	4.10	10.33	6.13	4.21	9.87	5.94	4.48	9.29	5.70	4.86
		24°C	11.68	8.08	4.01	11.25	7.90	4.02	10.82	7.72	4.10	10.38	7.52	4.21	9.93	7.32	4.48	9.36	7.06	4.86
		27°C	11.82	9.34	4.02	11.43	9.10	4.03	11.05	8.85	4.12	10.65	8.58	4.23	10.26	8.27	4.51	9.77	7.88	4.90
		30°C	12.43	10.01	4.04	12.06	9.72	4.07	11.70	9.42	4.16	11.31	9.12	4.28	10.91	8.79	4.56	10.41	8.39	4.96
	19°C	24°C	12.80	6.63	4.06	12.34	6.46	4.08	11.87	6.29	4.17	11.39	6.12	4.28	10.89	5.94	4.56	10.27	5.72	4.94
		27°C	12.85	8.09	4.06	12.38	7.91	4.08	11.91	7.73	4.17	11.43	7.54	4.29	10.93	7.35	4.56	10.31	7.12	4.95
		30°C	12.90	9.46	4.07	12.44	9.27	4.09	11.99	9.07	4.17	11.53	8.85	4.29	11.05	8.62	4.57	10.48	8.30	4.96
		33°C	13.17	10.55	4.08	12.77	10.28	4.10	12.38	9.98	4.20	11.98	9.66	4.33	11.57	9.33	4.62	11.05	8.91	5.02
	22°C	27°C	14.05	6.57	4.12	13.55	6.41	4.15	13.04	6.24	4.24	12.52	6.07	4.37	11.98	5.90	4.65	11.31	5.68	5.04
		30°C	14.09	8.06	4.12	13.58	7.88	4.15	13.07	7.70	4.25	12.55	7.52	4.37	12.01	7.34	4.65	11.34	7.11	5.04
		33°C	14.13	9.45	4.12	13.62	9.27	4.15	13.11	9.09	4.25	12.59	8.90	4.37	12.06	8.71	4.66	11.40	8.46	5.05
		36°C	14.22	10.76	4.13	13.73	10.54	4.16	13.26	10.32	4.26	12.78	10.07	4.39	12.30	9.80	4.68	11.72	9.42	5.08
1280	16°C	21°C	11.77	6.82	4.02	11.34	6.64	4.03	10.90	6.46	4.11	10.45	6.28	4.22	9.99	6.08	4.49	9.40	5.83	4.87
		24°C	11.82	8.28	4.02	11.38	8.09	4.03	10.95	7.90	4.11	10.50	7.70	4.22	10.04	7.49	4.49	9.47	7.22	4.87
		27°C	11.96	9.57	4.03	11.57	9.32	4.04	11.18	9.07	4.13	10.78	8.78	4.24	10.38	8.47	4.52	9.89	8.06	4.91
		30°C	12.57	10.26	4.05	12.21	9.96	4.07	11.83	9.65	4.17	11.45	9.33	4.29	11.04	9.00	4.57	10.53	8.58	4.97
	19°C	24°C	12.95	6.80	4.07	12.48	6.62	4.09	12.01	6.45	4.18	11.53	6.26	4.29	11.02	6.08	4.57	10.39	5.85	4.95
		27°C	13.00	8.29	4.07	12.52	8.10	4.09	12.05	7.92	4.18	11.57	7.72	4.30	11.06	7.52	4.57	10.43	7.28	4.96
		30°C	13.05	9.70	4.07	12.58	9.49	4.10	12.13	9.29	4.18	11.66	9.06	4.30	11.18	8.82	4.58	10.60	8.49	4.97
		33°C	13.32	10.81	4.09	12.92	10.53	4.11	12.52	10.22	4.21	12.13	9.89	4.34	11.71	9.54	4.63	11.19	9.11	5.03
	22°C	27°C	14.22	6.73	4.13	13.71	6.57	4.16	13.19	6.39	4.25	12.67	6.22	4.38	12.12	6.04	4.66	11.45	5.81	5.05
		30°C	14.25	8.26	4.13	13.74	8.07	4.16	13.23	7.89	4.26	12.70	7.70	4.38	12.15	7.51	4.66	11.48	7.27	5.06
		33°C	14.29	9.68	4.13	13.78	9.50	4.16	13.26	9.31	4.26	12.74	9.11	4.38	12.20	8.91	4.67	11.54	8.65	5.06
		36°C	14.39	11.02	4.14	13.89	10.80	4.17	13.41	10.57	4.27	12.93	10.31	4.40	12.44	10.02	4.69	11.86	9.63	5.09

Remark:
AFR: Air flow rate (CFM)
EWB: Entering Wet Bulb Temp. (˚C)
EDB: Entering Dry Bulb Temp. (˚C)

TC: Total Cooling Capacity (kW)
SHC: Sensible Heat Capacity (kW)
PI: Power Input

Notes:
1. Ratings shown are gross capacities which do not include a deduction for indoor fan motor heat.
2. shows nominal capacities.
3. Direct interpolation is permissible. Do not extrapolate.

Heating Mode

ID DB°C	Outdoor WB°C													
	-9		-6		-5		6		12		15		18	
	TC(kW)	SC(kW)	TC(kW)	SC(kW)	TC(kW)	SC(kW)	TC(kW)	SC(kW)	TC(kW)	SC(kW)	TC(kW)	SC(kW)	TC(kW)	SC(kW)
15	7.441	7.441	8.422	8.422	8.749	8.749	12.346	12.346	14.308	14.308	15.289	15.289	16.270	16.270
17	7.246	7.246	8.102	8.102	8.543	8.543	12.332	12.332	14.055	14.055	15.028	15.028	16.001	16.001
19	7.051	7.051	7.781	7.781	8.337	8.337	12.317	12.317	13.803	13.803	14.767	14.767	15.732	15.732
21	6.856	6.856	7.560	7.560	8.131	8.131	12.112	12.112	13.550	13.550	14.506	14.506	15.462	15.462
23	6.661	6.661	7.441	7.441	7.925	7.925	11.718	11.718	13.297	13.297	14.245	14.245	15.193	15.193
25	6.466	6.466	7.322	7.322	7.719	7.719	11.323	11.323	13.044	13.044	13.984	13.984	14.924	14.924
27	6.271	6.271	7.202	7.202	7.513	7.513	10.928	10.928	12.791	12.791	13.723	13.723	14.654	14.654
	FROST REGION													

Model: A5CC38CR - A5LC~~40CR~~ (3 Phase)
Cooling Mode

40DR

AFR (CFM)	EWB	EDB	Outdoor temperature																	
			19°C			25°C			30°C			35°C			40°C			46°C		
			TC	SHC	PI	TC	SHC	PI	TC	SHC	PI	TC	SHC	PI	TC	SHC	PI	TC	SHC	PI
920	16°C	21°C	11.14	6.09	3.97	10.73	5.94	3.98	10.33	5.78	4.06	9.90	5.62	4.17	9.46	5.46	4.44	8.91	5.25	4.81
		24°C	11.19	7.40	3.98	10.78	7.23	3.99	10.37	7.07	4.07	9.95	6.90	4.18	9.51	6.73	4.44	8.97	6.50	4.82
		27°C	11.32	8.54	3.98	10.95	8.33	4.00	10.58	8.11	4.08	10.21	7.87	4.19	9.84	7.60	4.47	9.37	7.25	4.86
		30°C	11.90	9.16	4.01	11.56	8.90	4.03	11.21	8.64	4.12	10.84	8.36	4.24	10.46	8.08	4.52	9.98	7.72	4.91
	19°C	24°C	12.26	6.07	4.03	11.82	5.92	4.04	11.38	5.77	4.13	10.92	5.61	4.25	10.44	5.45	4.52	9.84	5.26	4.90
		27°C	12.30	7.40	4.03	11.86	7.24	4.05	11.41	7.08	4.13	10.95	6.92	4.25	10.47	6.75	4.52	9.88	6.55	4.90
		30°C	12.35	8.66	4.03	11.91	8.48	4.05	11.49	8.31	4.14	11.05	8.12	4.26	10.59	7.91	4.53	10.04	7.64	4.92
		33°C	12.60	9.65	4.04	12.23	9.41	4.07	11.86	9.14	4.16	11.48	8.86	4.29	11.09	8.56	4.57	10.60	8.19	4.98
	22°C	27°C	13.45	6.01	4.09	12.98	5.87	4.11	12.50	5.72	4.21	12.00	5.57	4.33	11.48	5.42	4.61	10.84	5.23	5.00
		30°C	13.49	7.37	4.09	13.01	7.22	4.11	12.53	7.06	4.21	12.03	6.90	4.33	11.51	6.74	4.61	10.87	6.54	5.00
		33°C	13.53	8.65	4.09	13.05	8.49	4.12	12.56	8.33	4.21	12.06	8.17	4.34	11.56	8.00	4.62	10.93	7.78	5.01
		36°C	13.61	9.84	4.09	13.15	9.65	4.12	12.70	9.46	4.22	12.24	9.24	4.35	11.79	9.00	4.64	11.24	8.66	5.04
1050	16°C	21°C	11.43	6.42	3.99	11.01	6.25	4.01	10.59	6.09	4.08	10.15	5.92	4.19	9.70	5.74	4.46	9.13	5.51	4.84
		24°C	11.48	7.79	4.00	11.05	7.62	4.01	10.63	7.44	4.09	10.20	7.26	4.20	9.75	7.07	4.47	9.20	6.83	4.84
		27°C	11.61	9.00	4.00	11.23	8.78	4.02	10.85	8.54	4.10	10.47	8.28	4.22	10.08	7.99	4.49	9.61	7.61	4.88
		30°C	12.21	9.65	4.03	11.85	9.37	4.05	11.49	9.09	4.14	11.12	8.80	4.26	10.72	8.49	4.54	10.23	8.11	4.94
	19°C	24°C	12.58	6.40	4.05	12.12	6.23	4.06	11.66	6.07	4.15	11.19	5.91	4.27	10.70	5.73	4.54	10.09	5.52	4.93
		27°C	12.62	7.80	4.05	12.16	7.63	4.07	11.70	7.46	4.15	11.23	7.28	4.27	10.74	7.10	4.55	10.13	6.88	4.93
		30°C	12.67	9.12	4.05	12.22	8.94	4.07	11.78	8.75	4.16	11.33	8.54	4.28	10.86	8.32	4.55	10.29	8.02	4.94
		33°C	12.93	10.17	4.06	12.54	9.91	4.09	12.16	9.62	4.19	11.78	9.32	4.31	11.37	9.01	4.60	10.86	8.61	5.00
	22°C	27°C	13.80	6.33	4.11	13.31	6.18	4.13	12.81	6.02	4.23	12.30	5.86	4.35	11.77	5.70	4.63	11.12	5.49	5.02
		30°C	13.84	7.77	4.11	13.34	7.60	4.14	12.85	7.43	4.23	12.33	7.26	4.35	11.80	7.08	4.64	11.15	6.87	5.03
		33°C	13.88	9.11	4.11	13.38	8.94	4.14	12.88	8.77	4.23	12.37	8.59	4.36	11.85	8.41	4.64	11.20	8.17	5.03
		36°C	13.97	10.37	4.11	13.49	10.16	4.14	13.02	9.95	4.24	12.55	9.72	4.37	12.08	9.46	4.66	11.52	9.10	5.07
1160	16°C	21°C	11.64	6.66	4.01	11.21	6.48	4.02	10.78	6.31	4.10	10.33	6.13	4.21	9.87	5.94	4.48	9.29	5.70	4.86
		24°C	11.68	8.08	4.01	11.25	7.90	4.02	10.82	7.72	4.10	10.38	7.52	4.21	9.93	7.32	4.48	9.36	7.06	4.86
		27°C	11.82	9.34	4.02	11.43	9.10	4.03	11.05	8.85	4.12	10.65	8.58	4.23	10.26	8.27	4.51	9.77	7.88	4.90
		30°C	12.43	10.01	4.04	12.06	9.72	4.07	11.70	9.42	4.16	11.31	9.12	4.28	10.91	8.79	4.56	10.41	8.39	4.96
	19°C	24°C	12.80	6.63	4.06	12.34	6.46	4.08	11.87	6.29	4.17	11.39	6.12	4.28	10.89	5.94	4.56	10.27	5.72	4.94
		27°C	12.85	8.09	4.06	12.38	7.91	4.08	11.91	7.73	4.17	11.43	7.54	4.29	10.93	7.35	4.56	10.31	7.12	4.95
		30°C	12.90	9.46	4.07	12.44	9.27	4.09	11.99	9.07	4.17	11.53	8.85	4.29	11.05	8.62	4.57	10.48	8.30	4.96
		33°C	13.17	10.55	4.08	12.77	10.28	4.10	12.38	9.98	4.20	11.98	9.66	4.33	11.57	9.33	4.62	11.05	8.91	5.02
	22°C	27°C	14.05	6.57	4.12	13.55	6.41	4.15	13.04	6.24	4.24	12.52	6.07	4.37	11.98	5.90	4.65	11.31	5.68	5.04
		30°C	14.09	8.06	4.12	13.58	7.88	4.15	13.07	7.70	4.25	12.55	7.52	4.37	12.01	7.34	4.65	11.34	7.11	5.04
		33°C	14.13	9.45	4.12	13.62	9.27	4.15	13.11	9.09	4.25	12.59	8.90	4.37	12.06	8.71	4.66	11.40	8.46	5.05
		36°C	14.22	10.76	4.13	13.73	10.54	4.16	13.26	10.32	4.26	12.78	10.07	4.39	12.30	9.80	4.68	11.72	9.42	5.08
1280	16°C	21°C	11.77	6.82	4.02	11.34	6.64	4.03	10.90	6.46	4.11	10.45	6.28	4.22	9.99	6.08	4.49	9.40	5.83	4.87
		24°C	11.82	8.28	4.02	11.38	8.09	4.03	10.95	7.90	4.11	10.50	7.70	4.22	10.04	7.49	4.49	9.47	7.22	4.87
		27°C	11.96	9.57	4.03	11.57	9.32	4.04	11.18	9.07	4.13	10.78	8.78	4.24	10.38	8.47	4.52	9.89	8.06	4.91
		30°C	12.57	10.26	4.05	12.21	9.96	4.07	11.83	9.65	4.17	11.45	9.33	4.29	11.04	9.00	4.57	10.53	8.58	4.97
	19°C	24°C	12.95	6.80	4.07	12.48	6.62	4.09	12.01	6.45	4.18	11.53	6.26	4.29	11.02	6.08	4.57	10.39	5.85	4.95
		27°C	13.00	8.29	4.07	12.52	8.10	4.09	12.05	7.92	4.18	11.57	7.72	4.30	11.06	7.52	4.57	10.43	7.28	4.96
		30°C	13.05	9.70	4.07	12.58	9.49	4.10	12.13	9.29	4.18	11.66	9.06	4.30	11.18	8.82	4.58	10.60	8.49	4.97
		33°C	13.32	10.81	4.09	12.92	10.53	4.11	12.52	10.22	4.21	12.13	9.89	4.34	11.71	9.54	4.63	11.19	9.11	5.03
	22°C	27°C	14.22	6.73	4.13	13.71	6.57	4.16	13.19	6.39	4.25	12.67	6.22	4.38	12.12	6.04	4.66	11.45	5.81	5.05
		30°C	14.25	8.26	4.13	13.74	8.07	4.16	13.23	7.89	4.26	12.70	7.70	4.38	12.15	7.51	4.66	11.48	7.27	5.06
		33°C	14.29	9.68	4.13	13.78	9.50	4.16	13.26	9.31	4.26	12.74	9.11	4.38	12.20	8.91	4.67	11.54	8.65	5.06
		36°C	14.39	11.02	4.14	13.89	10.80	4.17	13.41	10.57	4.27	12.93	10.31	4.40	12.44	10.02	4.69	11.86	9.63	5.09

Remark:
AFR: Air flow rate (CFM)
EWB: Entering Wet Bulb Temp. (˚C)
EDB: Entering Dry Bulb Temp. (˚C)

TC: Total Cooling Capacity (kW)
SHC: Sensible Heat Capacity (kW)
PI: Power Input

Notes:
1. Ratings shown are gross capacities which do not include a deduction for indoor fan motor heat.
2. shows nominal capacities.
3. Direct interpolation is permissible. Do not extrapolate.

Heating Mode

ID DB°C	Outdoor WB°C													
	-9		-6		-5		6		12		15		18	
	TC(kW)	SC(kW)	TC(kW)	SC(kW)	TC(kW)	SC(kW)	TC(kW)	SC(kW)	TC(kW)	SC(kW)	TC(kW)	SC(kW)	TC(kW)	SC(kW)
15	7.441	7.441	8.422	8.422	8.749	8.749	12.346	12.346	14.308	14.308	15.289	15.289	16.270	16.270
17	7.246	7.246	8.102	8.102	8.543	8.543	12.332	12.332	14.055	14.055	15.028	15.028	16.001	16.001
19	7.051	7.051	7.781	7.781	8.337	8.337	12.317	12.317	13.803	13.803	14.767	14.767	15.732	15.732
21	6.856	6.856	7.560	7.560	8.131	8.131	12.112	12.112	13.550	13.550	14.506	14.506	15.462	15.462
23	6.661	6.661	7.441	7.441	7.925	7.925	11.718	11.718	13.297	13.297	14.245	14.245	15.193	15.193
25	6.466	6.466	7.322	7.322	7.719	7.719	11.323	11.323	13.044	13.044	13.984	13.984	14.924	14.924
27	6.271	6.271	7.202	7.202	7.513	7.513	10.928	10.928	12.791	12.791	13.723	13.723	14.654	14.654
	FROST REGION													

Model: A5CC50CR - A5LC~~50CR~~ 50DR
Cooling Mode

AFR (CFM)	EWB	EDB	Outdoor temperature																	
			19°C			25°C			30°C			35°C			40°C			46°C		
			TC	SHC	PI	TC	SHC	PI	TC	SHC	PI	TC	SHC	PI	TC	SHC	PI	TC	SHC	PI
1130	16°C	21°C	12.85	7.46	4.26	12.39	7.27	4.28	11.92	7.08	4.36	11.43	6.88	4.48	10.92	6.68	4.76	10.28	6.42	5.17
		24°C	12.91	9.05	4.27	12.44	8.85	4.28	11.97	8.65	4.36	11.48	8.45	4.48	10.98	8.23	4.77	10.35	7.95	5.17
		27°C	13.06	10.46	4.27	12.64	10.20	4.29	12.21	9.93	4.38	11.78	9.63	4.50	11.35	9.30	4.80	10.81	8.87	5.21
		30°C	13.73	11.21	4.30	13.33	10.89	4.32	12.93	10.57	4.42	12.51	10.23	4.55	12.07	9.88	4.85	11.51	9.44	5.27
	19°C	24°C	14.14	7.43	4.32	13.64	7.24	4.34	13.13	7.06	4.43	12.60	6.87	4.56	12.04	6.67	4.85	11.36	6.43	5.26
		27°C	14.19	9.06	4.32	13.68	8.86	4.34	13.17	8.67	4.43	12.64	8.47	4.56	12.09	8.26	4.85	11.40	8.01	5.26
		30°C	14.25	10.60	4.32	13.75	10.38	4.35	13.25	10.17	4.44	12.75	9.93	4.57	12.22	9.68	4.86	11.59	9.35	5.28
		33°C	14.54	11.81	4.34	14.11	11.51	4.36	13.69	11.19	4.47	13.25	10.84	4.60	12.80	10.48	4.91	12.23	10.03	5.34
	22°C	27°C	15.53	7.36	4.38	14.98	7.18	4.41	14.42	7.00	4.51	13.85	6.82	4.64	13.25	6.63	4.94	12.51	6.40	5.36
		30°C	15.56	9.02	4.39	15.01	8.83	4.41	14.46	8.64	4.52	13.88	8.44	4.65	13.29	8.24	4.95	12.55	8.00	5.37
		33°C	15.61	10.58	4.39	15.06	10.39	4.42	14.50	10.19	4.52	13.92	9.99	4.65	13.34	9.79	4.95	12.61	9.52	5.37
		36°C	15.71	12.04	4.39	15.18	11.81	4.42	14.66	11.57	4.53	14.13	11.31	4.67	13.60	11.01	4.97	12.97	10.60	5.41
1230	16°C	21°C	13.19	7.86	4.29	12.71	7.65	4.30	12.22	7.45	4.38	11.72	7.24	4.50	11.19	7.02	4.79	10.54	6.75	5.19
		24°C	13.25	9.54	4.29	12.76	9.32	4.30	12.27	9.11	4.39	11.77	8.89	4.50	11.25	8.66	4.79	10.61	8.35	5.20
		27°C	13.40	11.02	4.29	12.96	10.74	4.31	12.53	10.45	4.40	12.08	10.13	4.52	11.64	9.78	4.82	11.08	9.32	5.24
		30°C	14.09	11.81	4.32	13.68	11.47	4.35	13.26	11.13	4.44	12.83	10.77	4.57	12.37	10.39	4.88	11.80	9.92	5.30
	19°C	24°C	14.51	7.83	4.34	13.99	7.63	4.36	13.46	7.43	4.45	12.92	7.23	4.58	12.35	7.02	4.87	11.65	6.76	5.28
		27°C	14.56	9.55	4.34	14.04	9.34	4.36	13.51	9.13	4.46	12.96	8.91	4.58	12.39	8.69	4.88	11.69	8.41	5.29
		30°C	14.63	11.16	4.35	14.10	10.94	4.37	13.59	10.70	4.46	13.07	10.45	4.59	12.53	10.18	4.89	11.88	9.82	5.31
		33°C	14.92	12.45	4.36	14.47	12.13	4.39	14.04	11.78	4.49	13.59	11.41	4.63	13.12	11.02	4.93	12.54	10.54	5.37
	22°C	27°C	15.93	7.75	4.41	15.36	7.56	4.44	14.79	7.37	4.54	14.20	7.17	4.67	13.59	6.97	4.97	12.83	6.72	5.39
		30°C	15.97	9.51	4.41	15.40	9.30	4.44	14.82	9.09	4.54	14.23	8.88	4.67	13.62	8.67	4.97	12.87	8.40	5.39
		33°C	16.02	11.15	4.41	15.44	10.94	4.44	14.87	10.73	4.54	14.27	10.52	4.68	13.67	10.29	4.98	12.93	10.00	5.40
		36°C	16.12	12.69	4.41	15.57	12.44	4.45	15.03	12.18	4.55	14.49	11.90	4.69	13.94	11.58	5.00	13.29	11.14	5.44
1320	16°C	21°C	13.43	8.15	4.30	12.93	7.94	4.31	12.44	7.72	4.40	11.92	7.50	4.52	11.39	7.27	4.80	10.72	6.98	5.21
		24°C	13.48	9.89	4.30	12.98	9.67	4.32	12.49	9.44	4.40	11.98	9.21	4.52	11.45	8.96	4.81	10.80	8.64	5.22
		27°C	13.64	11.43	4.31	13.19	11.14	4.33	12.75	10.83	4.42	12.29	10.50	4.54	11.84	10.12	4.84	11.28	9.64	5.26
		30°C	14.34	12.26	4.34	13.92	11.90	4.36	13.50	11.53	4.46	13.05	11.16	4.59	12.59	10.76	4.89	12.01	10.27	5.32
	19°C	24°C	14.77	8.12	4.36	14.24	7.91	4.38	13.70	7.70	4.47	13.15	7.49	4.60	12.57	7.27	4.89	11.85	6.99	5.30
		27°C	14.82	9.90	4.36	14.29	9.68	4.38	13.75	9.46	4.47	13.19	9.23	4.60	12.61	9.00	4.89	11.89	8.71	5.31
		30°C	14.89	11.58	4.36	14.35	11.34	4.38	13.83	11.10	4.48	13.30	10.83	4.61	12.76	10.54	4.90	12.09	10.16	5.32
		33°C	15.19	12.91	4.38	14.73	12.58	4.40	14.29	12.21	4.51	13.83	11.82	4.64	13.35	11.41	4.95	12.76	10.90	5.38
	22°C	27°C	16.22	8.04	4.42	15.63	7.84	4.45	15.05	7.64	4.55	14.45	7.43	4.69	13.83	7.22	4.99	13.05	6.95	5.41
		30°C	16.26	9.86	4.42	15.67	9.64	4.45	15.09	9.43	4.56	14.49	9.20	4.69	13.86	8.98	4.99	13.09	8.70	5.41
		33°C	16.30	11.57	4.43	15.72	11.34	4.46	15.13	11.12	4.56	14.53	10.90	4.69	13.92	10.66	5.00	13.16	10.35	5.42
		36°C	16.41	13.16	4.43	15.85	12.90	4.46	15.30	12.63	4.57	14.74	12.33	4.71	14.19	11.99	5.02	13.53	11.53	5.45
1430	16°C	21°C	13.58	8.35	4.31	13.08	8.13	4.32	12.58	7.91	4.41	12.06	7.68	4.53	11.53	7.44	4.81	10.85	7.14	5.22
		24°C	13.64	10.14	4.31	13.14	9.90	4.33	12.63	9.67	4.41	12.12	9.42	4.53	11.59	9.17	4.82	10.93	8.84	5.23
		27°C	13.80	11.71	4.32	13.35	11.41	4.34	12.90	11.09	4.43	12.44	10.75	4.55	11.98	10.36	4.85	11.41	9.86	5.27
		30°C	14.51	12.56	4.35	14.09	12.19	4.37	13.65	11.81	4.47	13.21	11.42	4.60	12.74	11.01	4.90	12.15	10.50	5.33
	19°C	24°C	14.95	8.32	4.37	14.41	8.10	4.39	13.86	7.89	4.48	13.30	7.67	4.61	12.72	7.44	4.90	11.99	7.15	5.31
		27°C	15.00	10.15	4.37	14.45	9.92	4.39	13.91	9.69	4.48	13.35	9.45	4.61	12.76	9.21	4.91	12.04	8.91	5.32
		30°C	15.06	11.87	4.37	14.52	11.62	4.39	14.00	11.36	4.49	13.46	11.08	4.62	12.90	10.79	4.92	12.23	10.39	5.34
		33°C	15.37	13.23	4.39	14.91	12.88	4.41	14.45	12.50	4.52	13.99	12.10	4.65	13.51	11.68	4.96	12.91	11.15	5.40
	22°C	27°C	16.41	8.24	4.43	15.82	8.03	4.46	15.23	7.82	4.56	14.62	7.61	4.70	13.99	7.39	5.00	13.21	7.11	5.42
		30°C	16.45	10.11	4.43	15.86	9.88	4.46	15.26	9.65	4.57	14.66	9.42	4.70	14.03	9.19	5.00	13.25	8.90	5.42
		33°C	16.50	11.85	4.44	15.90	11.62	4.47	15.31	11.39	4.57	14.70	11.15	4.70	14.08	10.91	5.01	13.31	10.58	5.43
		36°C	16.60	13.49	4.44	16.03	13.21	4.47	15.47	12.93	4.58	14.92	12.62	4.72	14.36	12.27	5.03	13.69	11.79	5.47

Remark:
AFR: Air flow rate (CFM)
EWB: Entering Wet Bulb Temp. (˚C)
EDB: Entering Dry Bulb Temp. (˚C)

TC: Total Cooling Capacity (kW)
SHC: Sensible Heat Capacity (kW)
PI: Power Input

Notes:
1. Ratings shown are gross capacities which do not include a deduction for indoor fan motor heat.
2. shows nominal capacities.
3. Direct interpolation is permissible. Do not extrapolate.

Heating Mode

ID DB°C	Outdoor WB°C													
	-9		-6		-5		6		12		15		18	
	TC(kW)	SC(kW)	TC(kW)	SC(kW)	TC(kW)	SC(kW)	TC(kW)	SC(kW)	TC(kW)	SC(kW)	TC(kW)	SC(kW)	TC(kW)	SC(kW)
15	8.682	8.682	9.826	9.826	10.208	10.208	14.404	14.404	16.693	16.693	17.837	17.837	18.982	18.982
17	8.454	8.454	9.647	9.647	9.958	9.958	14.387	14.387	16.347	16.347	17.475	17.475	18.603	18.603
19	8.226	8.226	9.468	9.468	9.707	9.707	14.370	14.370	16.002	16.002	17.112	17.112	18.223	18.223
21	7.999	7.999	9.233	9.233	9.457	9.457	14.100	14.100	15.656	15.656	16.750	16.750	17.844	17.844
23	7.771	7.771	8.942	8.942	9.207	9.207	13.577	13.577	15.310	15.310	16.387	16.387	17.464	17.464
25	7.544	7.544	8.651	8.651	8.957	8.957	13.055	13.055	14.965	14.965	16.025	16.025	17.085	17.085
27	7.316	7.316	8.359	8.359	8.707	8.707	12.533	12.533	14.619	14.619	15.662	15.662	16.706	16.706
	FROST REGION													

Model: ~~M5CC060CR - M5LC061CR~~ A5CC60CR - A5CC61DR

Cooling Mode

AFR (CFM)	EWB	EDB	Outdoor temperature																	
			19°C			25°C			30°C			35°C			40°C			46°C		
			TC	SHC	PI	TC	SHC	PI	TC	SHC	PI	TC	SHC	PI	TC	SHC	PI	TC	SHC	PI
1170	16°C	21°C	15.71	9.00	4.97	15.14	8.77	4.98	14.56	8.54	5.08	13.97	8.30	5.22	13.34	8.06	5.55	12.56	7.75	6.02
		24°C	15.78	10.92	4.97	15.20	10.68	4.99	14.62	10.44	5.08	14.03	10.19	5.22	13.41	9.93	5.55	12.65	9.59	6.02
		27°C	15.96	12.62	4.98	15.44	12.31	5.00	14.93	11.98	5.10	14.40	11.62	5.24	13.87	11.22	5.59	13.21	10.70	6.07
		30°C	16.78	13.53	5.01	16.30	13.14	5.04	15.80	12.75	5.15	15.29	12.35	5.30	14.75	11.92	5.65	14.07	11.39	6.14
	19°C	24°C	17.29	8.96	5.03	16.67	8.74	5.06	16.04	8.52	5.16	15.40	8.29	5.31	14.72	8.05	5.65	13.88	7.76	6.13
		27°C	17.34	10.93	5.04	16.72	10.69	5.06	16.10	10.46	5.17	15.45	10.22	5.31	14.77	9.97	5.65	13.93	9.66	6.13
		30°C	17.42	12.79	5.04	16.80	12.53	5.06	16.20	12.27	5.17	15.58	11.98	5.32	14.94	11.68	5.66	14.16	11.28	6.15
		33°C	17.77	14.26	5.05	17.25	13.89	5.09	16.73	13.50	5.21	16.20	13.08	5.36	15.64	12.65	5.72	14.94	12.10	6.22
	22°C	27°C	18.97	8.88	5.11	18.30	8.66	5.14	17.62	8.45	5.26	16.92	8.23	5.41	16.20	8.00	5.76	15.29	7.72	6.25
		30°C	19.02	10.89	5.11	18.35	10.65	5.14	17.67	10.42	5.26	16.97	10.19	5.42	16.24	9.95	5.77	15.34	9.65	6.25
		33°C	19.08	12.77	5.11	18.40	12.53	5.15	17.72	12.30	5.27	17.02	12.06	5.42	16.30	11.81	5.77	15.41	11.48	6.26
		36°C	19.20	14.53	5.12	18.55	14.25	5.15	17.91	13.96	5.28	17.27	13.64	5.44	16.62	13.28	5.80	15.85	12.79	6.30
1340	16°C	21°C	16.12	9.48	4.99	15.53	9.23	5.01	14.93	8.99	5.11	14.32	8.74	5.24	13.68	8.47	5.58	12.88	8.14	6.05
		24°C	16.19	11.51	5.00	15.59	11.25	5.01	15.00	10.99	5.11	14.38	10.72	5.25	13.75	10.44	5.58	12.97	10.08	6.06
		27°C	16.38	13.29	5.00	15.84	12.96	5.02	15.31	12.61	5.13	14.76	12.22	5.27	14.22	11.79	5.62	13.55	11.24	6.10
		30°C	17.22	14.25	5.04	16.72	13.84	5.06	16.21	13.43	5.18	15.68	12.99	5.33	15.12	12.54	5.68	14.43	11.97	6.18
	19°C	24°C	17.74	9.44	5.06	17.10	9.20	5.08	16.45	8.97	5.19	15.79	8.72	5.34	15.09	8.47	5.68	14.23	8.16	6.16
		27°C	17.80	11.52	5.06	17.15	11.26	5.09	16.51	11.01	5.19	15.84	10.75	5.34	15.14	10.48	5.68	14.29	10.15	6.16
		30°C	17.88	13.47	5.06	17.23	13.20	5.09	16.61	12.92	5.20	15.97	12.61	5.35	15.32	12.29	5.69	14.52	11.85	6.18
		33°C	18.24	15.02	5.08	17.69	14.63	5.11	17.15	14.21	5.23	16.61	13.76	5.39	16.03	13.30	5.75	15.32	12.71	6.25
	22°C	27°C	19.47	9.35	5.13	18.77	9.13	5.17	18.07	8.89	5.29	17.35	8.65	5.44	16.60	8.41	5.79	15.68	8.11	6.28
		30°C	19.52	11.47	5.14	18.82	11.22	5.17	18.12	10.97	5.29	17.39	10.72	5.44	16.65	10.46	5.80	15.72	10.14	6.29
		33°C	19.57	13.45	5.14	18.87	13.20	5.17	18.17	12.95	5.29	17.45	12.69	5.45	16.71	12.42	5.80	15.80	12.07	6.29
		36°C	19.70	15.31	5.14	19.03	15.01	5.18	18.37	14.70	5.30	17.70	14.36	5.47	17.04	13.97	5.83	16.25	13.44	6.33
1550	16°C	21°C	16.41	9.83	5.01	15.81	9.57	5.03	15.20	9.32	5.13	14.57	9.05	5.26	13.92	8.77	5.60	13.11	8.42	6.07
		24°C	16.48	11.94	5.02	15.87	11.66	5.03	15.26	11.39	5.13	14.64	11.11	5.27	14.00	10.81	5.60	13.20	10.43	6.08
		27°C	16.67	13.79	5.02	16.12	13.44	5.04	15.58	13.07	5.15	15.03	12.67	5.29	14.47	12.21	5.64	13.79	11.63	6.12
		30°C	17.53	14.79	5.06	17.01	14.35	5.08	16.49	13.92	5.20	15.95	13.46	5.35	15.39	12.99	5.70	14.68	12.39	6.20
	19°C	24°C	18.06	9.80	5.08	17.40	9.55	5.10	16.74	9.29	5.21	16.07	9.04	5.36	15.36	8.77	5.70	14.48	8.44	6.18
		27°C	18.12	11.95	5.08	17.46	11.68	5.10	16.80	11.41	5.21	16.12	11.14	5.36	15.41	10.86	5.70	14.54	10.51	6.19
		30°C	18.20	13.97	5.08	17.54	13.68	5.11	16.91	13.39	5.22	16.26	13.07	5.37	15.59	12.72	5.71	14.77	12.26	6.20
		33°C	18.57	15.58	5.10	18.00	15.17	5.13	17.46	14.73	5.25	16.90	14.26	5.41	16.32	13.77	5.77	15.59	13.16	6.27
	22°C	27°C	19.82	9.70	5.15	19.11	9.46	5.19	18.39	9.22	5.31	17.66	8.97	5.46	16.90	8.71	5.81	15.95	8.39	6.30
		30°C	19.87	11.90	5.15	19.16	11.64	5.19	18.44	11.37	5.31	17.70	11.11	5.46	16.94	10.83	5.82	16.00	10.49	6.31
		33°C	19.93	13.95	5.16	19.21	13.69	5.19	18.49	13.42	5.31	17.75	13.15	5.47	17.01	12.86	5.82	16.08	12.49	6.31
		36°C	20.06	15.88	5.16	19.37	15.56	5.20	18.69	15.23	5.32	18.02	14.88	5.49	17.34	14.46	5.85	16.53	13.91	6.36
1720	16°C	21°C	16.60	10.08	5.02	15.99	9.81	5.04	15.38	9.54	5.14	14.74	9.27	5.28	14.09	8.98	5.61	13.26	8.62	6.08
		24°C	16.67	12.23	5.03	16.05	11.95	5.04	15.44	11.67	5.14	14.81	11.37	5.28	14.16	11.07	5.62	13.35	10.67	6.09
		27°C	16.87	14.13	5.03	16.31	13.77	5.05	15.76	13.39	5.16	15.20	12.97	5.30	14.64	12.50	5.65	13.95	11.90	6.14
		30°C	17.73	15.15	5.07	17.21	14.70	5.09	16.69	14.25	5.21	16.14	13.78	5.36	15.57	13.29	5.71	14.85	12.67	6.21
	19°C	24°C	18.27	10.04	5.09	17.61	9.78	5.11	16.94	9.52	5.22	16.26	9.25	5.37	15.54	8.97	5.71	14.66	8.63	6.19
		27°C	18.33	12.25	5.09	17.66	11.97	5.12	17.00	11.69	5.23	16.31	11.40	5.37	15.59	11.11	5.72	14.71	10.75	6.20
		30°C	18.41	14.32	5.09	17.75	14.02	5.12	17.10	13.71	5.23	16.45	13.37	5.38	15.77	13.02	5.73	14.95	12.54	6.22
		33°C	18.78	15.97	5.11	18.22	15.54	5.14	17.66	15.09	5.26	17.10	14.60	5.42	16.51	14.09	5.78	15.78	13.46	6.29
	22°C	27°C	20.05	9.94	5.16	19.33	9.69	5.20	18.61	9.44	5.32	17.87	9.18	5.47	17.10	8.91	5.82	16.14	8.58	6.32
		30°C	20.10	12.19	5.17	19.38	11.92	5.20	18.65	11.65	5.32	17.91	11.37	5.48	17.14	11.08	5.83	16.19	10.73	6.32
		33°C	20.16	14.30	5.17	19.44	14.02	5.20	18.71	13.75	5.33	17.96	13.46	5.48	17.21	13.16	5.83	16.27	12.77	6.33
		36°C	20.29	16.27	5.17	19.59	15.94	5.21	18.91	15.60	5.34	18.23	15.23	5.50	17.55	14.80	5.86	16.73	14.22	6.37

Remark:
AFR: Air flow rate (CFM)
EWB: Entering Wet Bulb Temp. (˚C)
EDB: Entering Dry Bulb Temp. (˚C)

TC: Total Cooling Capacity (kW)
SHC: Sensible Heat Capacity (kW)
PI: Power Input

Notes:
1. Ratings shown are gross capacities which do not include a deduction for indoor fan motor heat.
2. shows nominal capacities.
3. Direct interpolation is permissible. Do not extrapolate.

Heating Mode

ID DB°C	Outdoor WB°C													
	-9		-6		-5		6		12		15		18	
	TC(kW)	SC(kW)	TC(kW)	SC(kW)	TC(kW)	SC(kW)	TC(kW)	SC(kW)	TC(kW)	SC(kW)	TC(kW)	SC(kW)	TC(kW)	SC(kW)
15	10.099	10.099	11.430	11.430	11.874	11.874	16.756	16.756	19.418	19.418	20.750	20.750	22.081	22.081
17	9.834	9.834	11.313	11.313	11.596	11.596	16.736	16.736	19.081	19.081	20.402	20.402	21.723	21.723
19	9.570	9.570	11.196	11.196	11.317	11.317	16.716	16.716	18.743	18.743	20.053	20.053	21.364	21.364
21	9.305	9.305	10.943	10.943	11.038	11.038	16.441	16.441	18.405	18.405	19.705	19.705	21.005	21.005
23	9.040	9.040	10.555	10.555	10.760	10.760	15.912	15.912	18.068	18.068	19.357	19.357	20.647	20.647
25	8.775	8.775	10.167	10.167	10.481	10.481	15.383	15.383	17.730	17.730	19.009	19.009	20.288	20.288
27	8.511	8.511	9.779	9.779	10.202	10.202	14.855	14.855	17.392	17.392	18.661	18.661	19.930	19.930
	FROST REGION													

8. OUTLINE AND DIMENSION

Indoor Unit

Model : ACC / A5CC 10C/CR

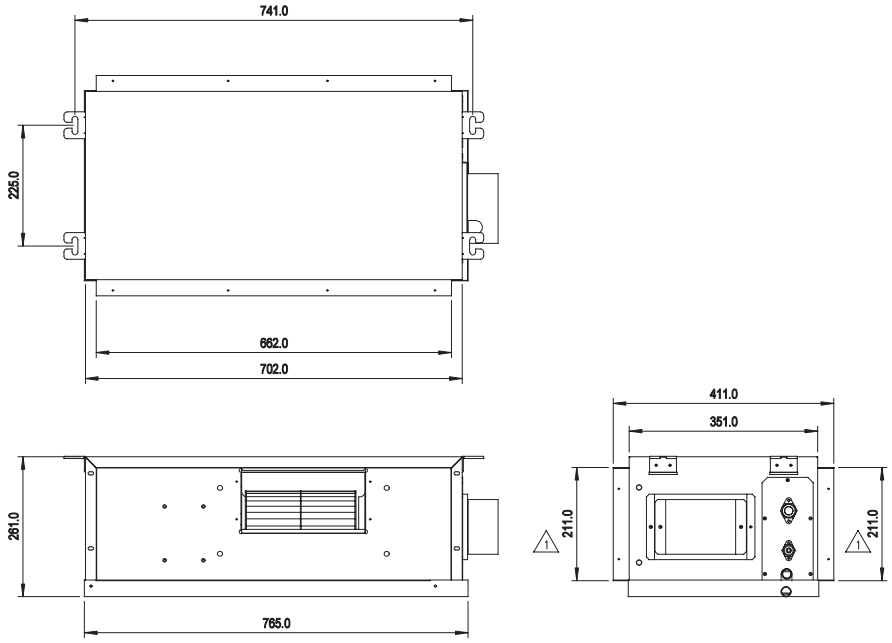

All Dimensions are in mm

Model : ACC / A5CC 15 ~ 25C/CR

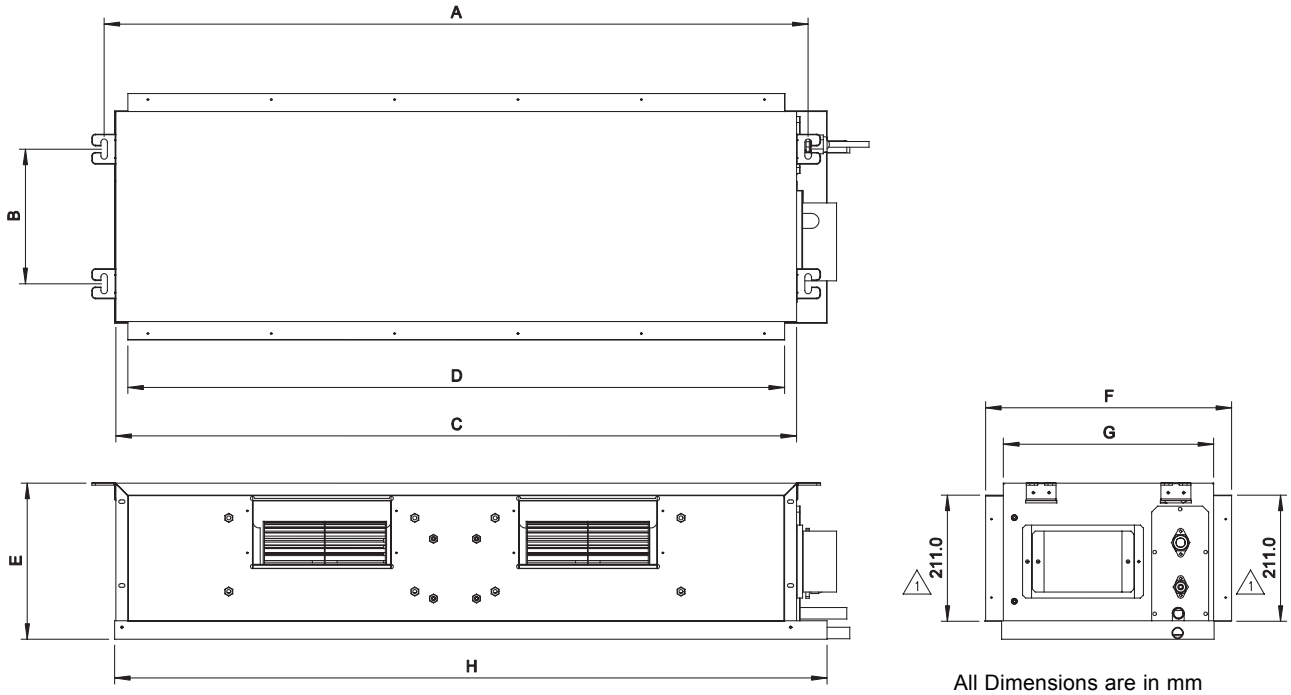

All Dimensions are in mm

MODEL	A	B	C	D	E	F	G	H
15C/CR	881.0	225.0	842.0	802.0	261.0	411.0	351.0	905.0
20C/CR	1041.0	225.0	1002.0	962.0	261.0	411.0	351.0	1065.0
25C/CR	1176.0	225.0	1137.0	1097.0	261.0	411.0	351.0	1200.0

Model: ACC / A5CC 28C/CR

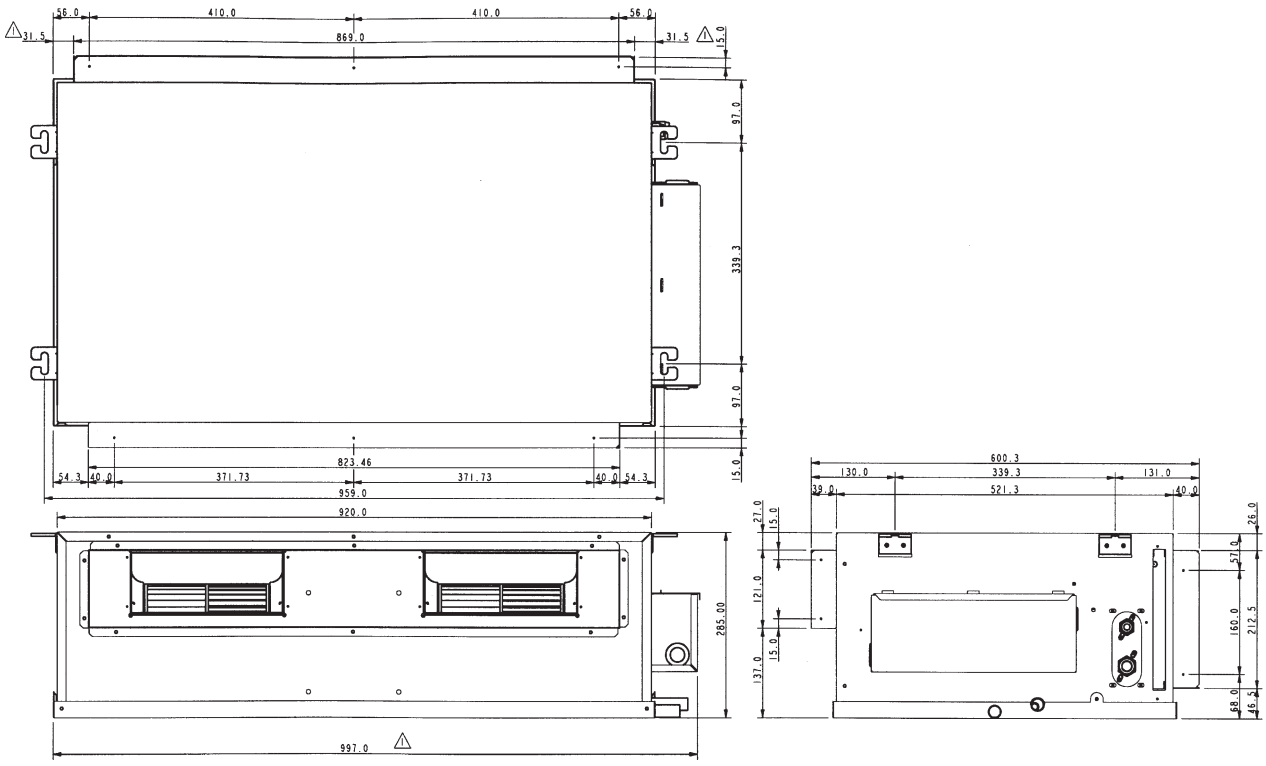

All dimension are in mm

Model: ACC / A5CC 38C/CR

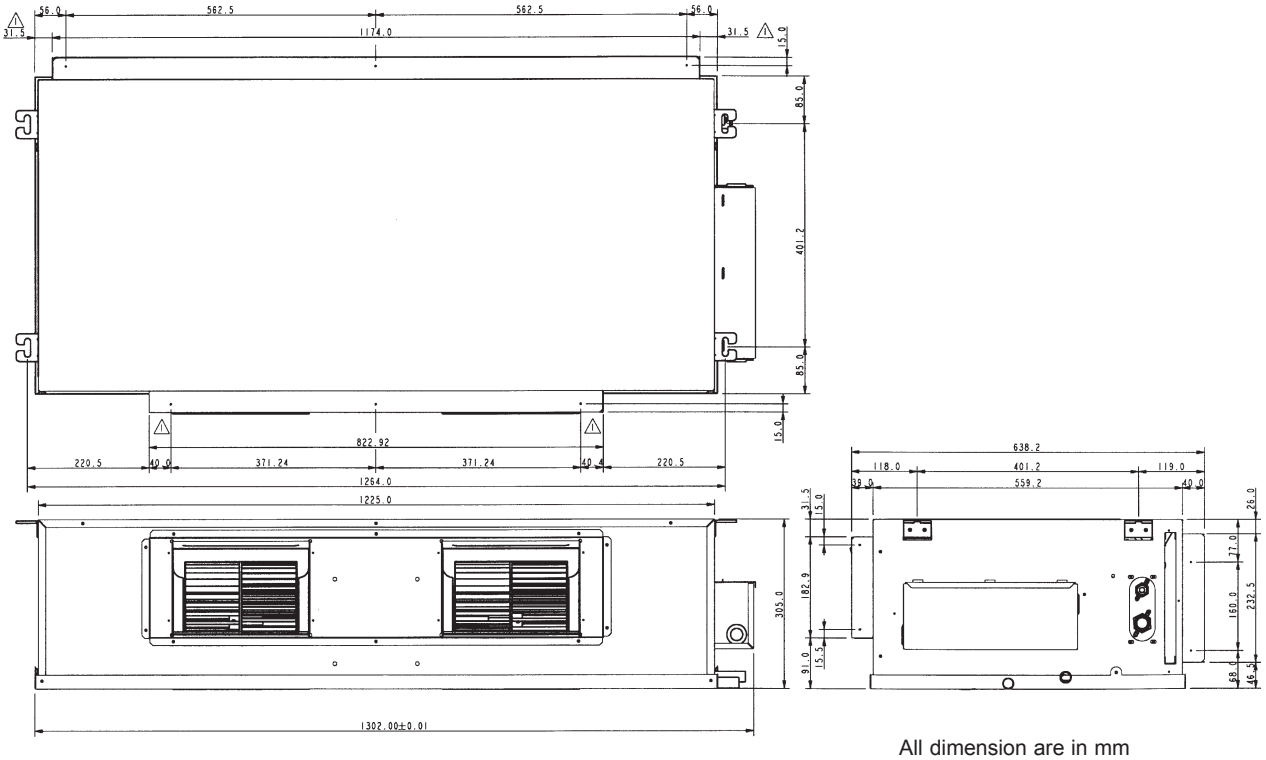

All dimension are in mm

Model: ACC 30 ~ 60 C/CR, A5CC 50 / 60C/CR

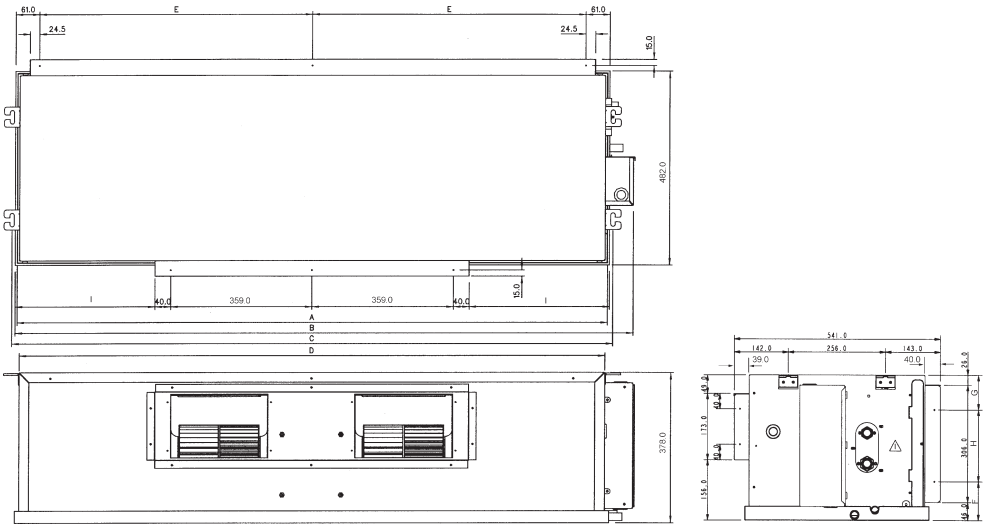

All dimension are in mm

Model	A	B	C	D	E	F	G	H	I
30C/CR	929.0	999.0	956.0	917.0	408.5	105.0	85.5	187.5	70.5
40C/CR	1045.0	1115.0	1072.0	1033.0	466.5	105.0	85.5	187.5	128.5
50C/CR	1299.0	1369.0	1326.0	1287.0	593.5	105.0	90.5	182.5	255.5
60C/CR	1499.0	1569.0	1526.0	1487.0	693.5	100.0	90.5	187.5	355.5

Outdoor Unit

Model: ALC / A5LC 10 / 15C/CR

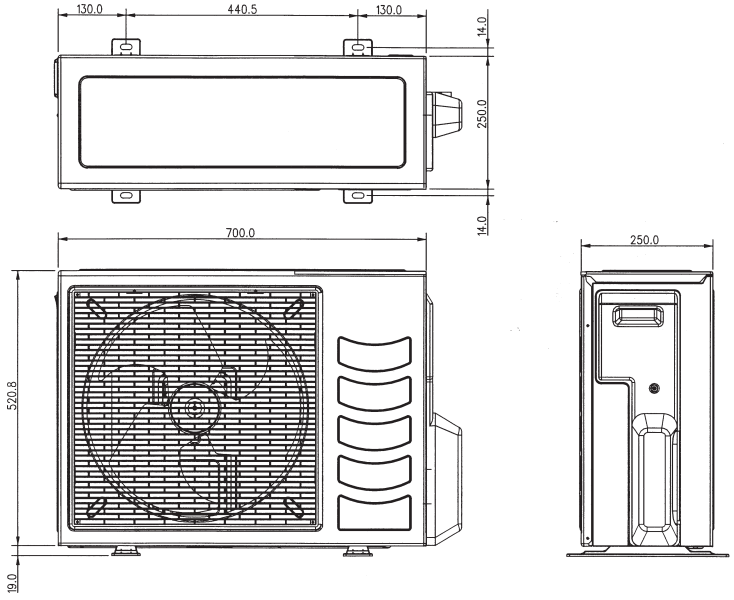

All dimension are in mm

ALC 30/35/40/50/61D/DR
A5LC 35/40/50/61D/DR

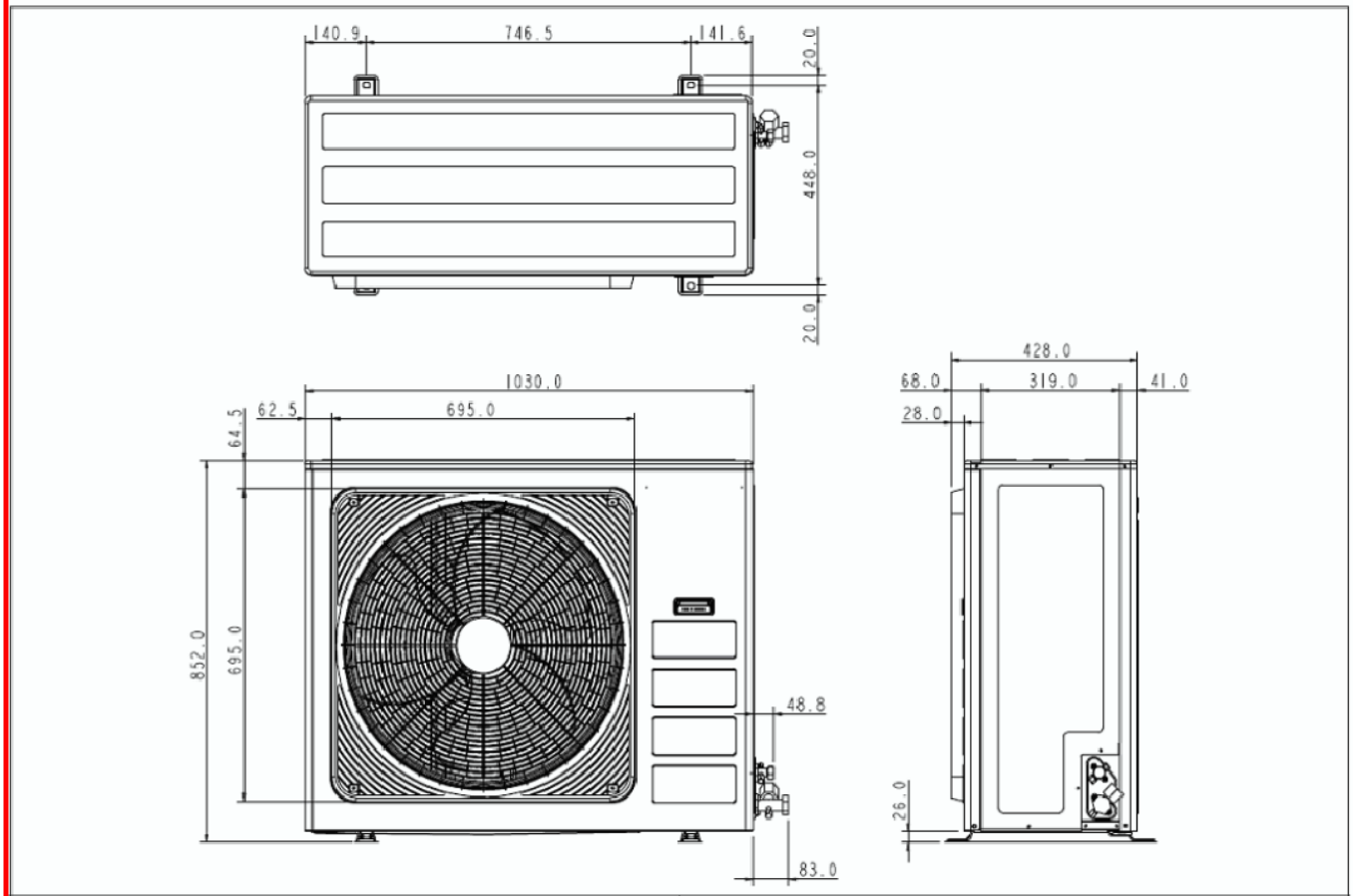

Note : Dimension in mm

9. ELECTRICAL DATA

Electrical Data - Cooling Only (R22)

MODEL	INDOOR UNIT		ACC 10C	ACC 15C
	OUTDOOR UNIT		ALC 10C	ALC 15C
INDOOR MOTOR	INSULATION GRADE		CLASS E	
	POWER SOURCE	V/Ph/Hz	220 - 240 / 1 / 50	
	RATED INPUT POWER	W	65	96
	RATED RUNNING CURRENT	A	0.29	0.42
	MOTOR OUTPUT	W	30	50
	POLES		4	4
OUTDOOR MOTOR	INSULATION GRADE		CLASS B	
	POWER SOURCE	V/Ph/Hz	220 - 240 / 1 / 50	
	RATED INPUT POWER	W	52	59
	RATED RUNNING CURRENT	A	0.23	0.26
	MOTOR OUTPUT	W	35	35
	POLES		6	6
COMPRESSOR	INSULATION GRADE		CLASS E	
	POWER SOURCE	V/Ph/Hz	220 - 240 / 1 / 50	
	CAPACITOR	μF	30.0	30.0
	RATED INPUT POWER	W	783	1112
	RATED RUNNING CURRENT	A	3.5	5.0
	LOCKED ROTOR AMP.	A	19	21

MODEL	INDOOR UNIT		ACC 20C	
	OUTDOOR UNIT		ALC 18C	ALC 20C
INDOOR MOTOR	INSULATION GRADE		CLASS E	
	POWER SOURCE	V/Ph/Hz	220 - 240 / 1 / 50	
	RATED INPUT POWER	W	135	
	RATED RUNNING CURRENT	A	0.60	
	MOTOR OUTPUT	W	80	
	POLES		6	
OUTDOOR MOTOR	INSULATION GRADE		CLASS B	
	POWER SOURCE	V/Ph/Hz	220 - 240 / 1 / 50	
	RATED INPUT POWER	W	120	
	RATED RUNNING CURRENT	A	0.53	
	MOTOR OUTPUT	W	55	
	POLES		6	
COMPRESSOR	INSULATION GRADE		CLASS E	
	POWER SOURCE	V/Ph/Hz	220 - 240 / 1 / 50	
	CAPACITOR	μF	60.0	60.0
	RATED INPUT POWER	W	1655	1640
	RATED RUNNING CURRENT	A	7.4	7.2
	LOCKED ROTOR AMP.	A	32	32

1) ALL SPECIFICATIONS ARE SUBJECTED TO CHANGE BY THE MANUFACTURER WITHOUT PRIOR NOTICE.

2) ALL SPECIFICATIONS ARE BEING TESTED AND COMPLY TO ISO 13253.

Electrical Data - Cooling Only (R22)

MODEL	**INDOOR UNIT**		**ACC 25C**
	OUTDOOR UNIT		**ALC 25C**
INDOOR MOTOR	**INSULATION GRADE**		CLASS E
	POWER SOURCE	**V/Ph/Hz**	220 - 240 / 1 / 50
	RATED INPUT POWER	**W**	152
	RATED RUNNING CURRENT	**A**	0.67
	MOTOR OUTPUT	**W**	100
	POLES		4
OUTDOOR MOTOR	**INSULATION GRADE**		~~CLASS B~~ CLASS F
	POWER SOURCE	**V/Ph/Hz**	220 - 240 / 1 / 50
	RATED INPUT POWER	**W**	124
	RATED RUNNING CURRENT	**A**	0.54
	MOTOR OUTPUT	**W**	55
	POLES		6
COMPRESSOR	**INSULATION GRADE**		CLASS E
	POWER SOURCE	**V/Ph/Hz**	220 - 240 / 1 / 50
	CAPACITOR	**µF**	45.0
	RATED INPUT POWER	**W**	2340
	RATED RUNNING CURRENT	**A**	10.49
	LOCKED ROTOR AMP.	**A**	54

MODEL	**INDOOR UNIT**		**ACC 28C**	
	OUTDOOR UNIT		**ALC 28C**	**ALC ~~30C~~** 30D
INDOOR MOTOR	**INSULATION GRADE**		CLASS B	
	POWER SOURCE	**V/Ph/Hz**	220 - 240 / 1 / 50	
	RATED INPUT POWER	**W**	300	
	RATED RUNNING CURRENT	**A**	1.30	
	MOTOR OUTPUT	**W**	320	
	POLES		4	
OUTDOOR MOTOR	**INSULATION GRADE**		CLASS F	~~CLASS B~~ CLASS F
	POWER SOURCE	**V/Ph/Hz**	220 - 240 / 1 / 50	
	RATED INPUT POWER	**W**	142	220
	RATED RUNNING CURRENT	**A**	0.62	1.02
	MOTOR OUTPUT	**W**	75	145
	POLES		6	8
COMPRESSOR	**INSULATION GRADE**		CLASS E	-
	POWER SOURCE - 1Ø / <3Ø>	**V/Ph/Hz**	220 - 240 / 1 / 50 / <380 - 415 / 3 / 50>	
	CAPACITOR - 1Ø / <3Ø>	**µF**	50.0	50.0 / <NIL>
	RATED INPUT POWER - 1Ø / <3Ø>	**W**	2649	2301 / <2461>
	RATED RUNNING CURRENT - 1Ø / <3Ø>	**A**	13.2	10.6 / <3.4>
	LOCKED ROTOR AMP. - 1Ø / <3Ø>	**A**	66	82 / <40>

1) ALL SPECIFICATIONS ARE SUBJECTED TO CHANGE BY THE MANUFACTURER WITHOUT PRIOR NOTICE.
2) ALL SPECIFICATIONS ARE BEING TESTED AND COMPLY TO ISO 13253.

Electrical Data - Cooling Only (R22)

MODEL	INDOOR UNIT		ACC 38C	
	OUTDOOR UNIT		ALC ~~35C~~ 35D	ALC ~~40C~~ 40D
INDOOR MOTOR	INSULATION GRADE		CLASS B	
	POWER SOURCE	V/Ph/Hz	220 - 240 / 1 / 50	
	RATED INPUT POWER	W	486	
	RATED RUNNING CURRENT	A	2.10	
	MOTOR OUTPUT	W	470	
	POLES		4	
OUTDOOR MOTOR	INSULATION GRADE		~~CLASS B~~ CLASS F	
	POWER SOURCE	V/Ph/Hz	220 - 240 / 1 / 50	
	RATED INPUT POWER	W	220	
	RATED RUNNING CURRENT	A	1.02	
	MOTOR OUTPUT	W	145	
	POLES		8	
COMPRESSOR	INSULATION GRADE		-	-
	POWER SOURCE - 1Ø / <3Ø>	V/Ph/Hz	220 - 240 / 1 / 50 / <380 - 415 / 3 / 50>	
	CAPACITOR - 1Ø / <3Ø>	µF	60.0	60.0 / <NIL>
	RATED INPUT POWER - 1Ø / <3Ø>	W	2737	2767 / <2737>
	RATED RUNNING CURRENT - 1Ø / <3Ø>	A	13.4	24 / <13.4>
	LOCKED ROTOR AMP. - 1Ø / <3Ø>	A	97	114 / <48>

MODEL	INDOOR UNIT		ACC 30C	
	OUTDOOR UNIT		ALC 28C	ALC ~~30C~~ 30D
INDOOR MOTOR	INSULATION GRADE		CLASS B	
	POWER SOURCE	V/Ph/Hz	220 - 240 / 1 / 50	
	RATED INPUT POWER	W	355	
	RATED RUNNING CURRENT	A	1.57	
	MOTOR OUTPUT	W	320	
	POLES		4	
OUTDOOR MOTOR	INSULATION GRADE		CLASS F ~~CLASS B~~ CLASS F	
	POWER SOURCE	V/Ph/Hz	220 - 240 / 1 / 50	
	RATED INPUT POWER	W	142	220
	RATED RUNNING CURRENT	A	0.62	1.02
	MOTOR OUTPUT	W	75	145
	POLES		6	8
COMPRESSOR	INSULATION GRADE		CLASS E	-
	POWER SOURCE - 1Ø / <3Ø>	V/Ph/Hz	220 - 240 / 1 / 50 / <380 - 415 / 3 / 50>	
	CAPACITOR - 1Ø / <3Ø>	µF	50.0	50.0 / <NIL>
	RATED INPUT POWER - 1Ø / <3Ø>	W	2656	2224 / <2294>
	RATED RUNNING CURRENT - 1Ø / <3Ø>	A	13.3	10.5 / <2.9>
	LOCKED ROTOR AMP. - 1Ø / <3Ø>	A	66	82 / <40>

1) ALL SPECIFICATIONS ARE SUBJECTED TO CHANGE BY THE MANUFACTURER WITHOUT PRIOR NOTICE.
2) ALL SPECIFICATIONS ARE BEING TESTED AND COMPLY TO ISO 13253.

Electrical Data - Cooling Only (R22)

MODEL	INDOOR UNIT		ACC 40C	
	OUTDOOR UNIT		ALC ~~35C~~ 35D	ALC ~~40C~~ 40D
INDOOR MOTOR	INSULATION GRADE		CLASS B	
	POWER SOURCE	V/Ph/Hz	220 - 240 / 1 / 50	
	RATED INPUT POWER	W	448	
	RATED RUNNING CURRENT	A	1.98	
	MOTOR OUTPUT	W	400	
	POLES		4	
OUTDOOR MOTOR	INSULATION GRADE		~~CLASS B~~ CLASS F	
	POWER SOURCE	V/Ph/Hz	220 - 240 / 1 / 50	
	RATED INPUT POWER	W	220	
	RATED RUNNING CURRENT	A	1.02	
	MOTOR OUTPUT	W	145	
	POLES		8	
COMPRESSOR	INSULATION GRADE		-	-
	POWER SOURCE - 1Ø / <3Ø>	V/Ph/Hz	220 - 240 / 1 / 50 / <380 - 415 / 3 / 50>	
	CAPACITOR - 1Ø / <3Ø>	µF	60.0	60.0 / <NIL>
	RATED INPUT POWER - 1Ø / <3Ø>	W	2737	2887 / <2837>
	RATED RUNNING CURRENT - 1Ø / <3Ø>	A	13.4	15.5 / <4.9>
	LOCKED ROTOR AMP. - 1Ø / <3Ø>	A	97	114 / <48>

MODEL	INDOOR UNIT		ACC 50C	ACC 60C
	OUTDOOR UNIT		ALC ~~50C~~ 50D	ALC ~~61C~~ 61D
INDOOR MOTOR	INSULATION GRADE		CLASS B	
	POWER SOURCE	V/Ph/Hz	220 - 240 / 1 / 50	
	RATED INPUT POWER	W	510	748
	RATED RUNNING CURRENT	A	2.26	3.20
	MOTOR OUTPUT	W	480	600
	POLES		4	4
OUTDOOR MOTOR	INSULATION GRADE		~~CLASS B~~ CLASS F	CLASS F
	POWER SOURCE	V/Ph/Hz	220 - 240 / 1 / 50	
	RATED INPUT POWER	W	220	258
	RATED RUNNING CURRENT	A	1.02	1.20
	MOTOR OUTPUT	W	145	400
	POLES		8	8
COMPRESSOR	INSULATION GRADE		-	-
	POWER SOURCE	V/Ph/Hz	380 - 415 / 3 / 50	
	CAPACITOR	µF	NIL	NIL
	RATED INPUT POWER	W	4244	5000 / 6180*
	RATED RUNNING CURRENT	A	7.50	8.50 / 9.76*
	LOCKED ROTOR AMP.	A	66	74 / 72*

1) ALL SPECIFICATIONS ARE SUBJECTED TO CHANGE BY THE MANUFACTURER WITHOUT PRIOR NOTICE.

2) ALL SPECIFICATIONS ARE BEING TESTED AND COMPLY TO ISO 13253.

*3) *DATA REFER TO INDOOR COUPLED WITH MLC61D-xxYxx.*

Electrical Data - Heat pump (R22)

MODEL	INDOOR UNIT		ACC 10CR	ACC 15CR
	OUTDOOR UNIT		ALC 10CR	ALC 15CR
INDOOR MOTOR	INSULATION GRADE		CLASS E	
	POWER SOURCE	V/Ph/Hz	220 - 240 / 1 / 50	
	RATED INPUT POWER	W	65	96
	RATED RUNNING CURRENT	A	0.29	0.42
	MOTOR OUTPUT	W	30	50
	POLES		4	4
OUTDOOR MOTOR	INSULATION GRADE		CLASS B	
	POWER SOURCE	V/Ph/Hz	220 - 240 / 1 / 50	
	RATED INPUT POWER	W	52	59
	RATED RUNNING CURRENT	A	0.23	0.26
	MOTOR OUTPUT	W	35	35
	POLES		6	6
COMPRESSOR	INSULATION GRADE		CLASS E	
	POWER SOURCE	V/Ph/Hz	220 - 240 / 1 / 50	
	CAPACITOR	μF	30.0	30.0
	RATED INPUT POWER (COOLING)	W	783	1112
	RATED INPUT POWER (HEATING)	W	673	907
	RATED RUNNING CURRENT (COOLING)	A	3.5	5.0
	RATED RUNNING CURRENT (HEATING)	A	3.0	4.1
	LOCKED ROTOR AMP.	A	19	21

MODEL	INDOOR UNIT		ACC 20CR	
	OUTDOOR UNIT		~~ALC 18CR~~	ALC 20CR
INDOOR MOTOR	INSULATION GRADE		CLASS E	
	POWER SOURCE	V/Ph/Hz	220 - 240 / 1 / 50	
	RATED INPUT POWER	W	135	
	RATED RUNNING CURRENT	A	0.60	
	MOTOR OUTPUT	W	80	
	POLES		6	
OUTDOOR MOTOR	INSULATION GRADE		CLASS B	
	POWER SOURCE	V/Ph/Hz	220 - 240 / 1 / 50	
	RATED INPUT POWER	W	120	
	RATED RUNNING CURRENT	A	0.53	
	MOTOR OUTPUT	W	55	
	POLES		6	
COMPRESSOR	INSULATION GRADE		CLASS E	
	POWER SOURCE	V/Ph/Hz	220 - 240 / 1 / 50	
	CAPACITOR	μF	60.0	60.0
	RATED INPUT POWER (COOLING)	W	1655	1640
	RATED INPUT POWER (HEATING)	W	1495	1590
	RATED RUNNING CURRENT (COOLING)	A	7.4	7.2
	RATED RUNNING CURRENT (HEATING)	A	6.7	7.0
	LOCKED ROTOR AMP.	A	32	32

1) ALL SPECIFICATIONS ARE SUBJECTED TO CHANGE BY THE MANUFACTURER WITHOUT PRIOR NOTICE.
2) ALL SPECIFICATIONS ARE BEING TESTED AND COMPLY TO ISO 13253.

Electrical Data - Heat Pump (R22)

MODEL	**INDOOR UNIT**		**ACC 25CR**
	OUTDOOR UNIT		**ALC 25CR**
	INSULATION GRADE		CLASS E
INDOOR MOTOR	**POWER SOURCE**	**V/Ph/Hz**	220 - 240 / 1 / 50
	RATED INPUT POWER	**W**	152
	RATED RUNNING CURRENT	**A**	0.67
	MOTOR OUTPUT	**W**	100
	POLES		4
OUTDOOR MOTOR	**INSULATION GRADE**		~~CLASS B~~ CLASS F
	POWER SOURCE	**V/Ph/Hz**	220 - 240 / 1 / 50
	RATED INPUT POWER	**W**	124
	RATED RUNNING CURRENT	**A**	0.54
	MOTOR OUTPUT	**W**	55
	POLES		6
COMPRESSOR	**INSULATION GRADE**		CLASS E
	POWER SOURCE	**V/Ph/Hz**	220 - 240 / 1 / 50
	CAPACITOR	**µF**	50.0
	RATED INPUT POWER (COOLING)	**W**	2340
	RATED INPUT POWER (HEATING)	**W**	2260
	RATED RUNNING CURRENT (COOLING)	**A**	10.49
	RATED RUNNING CURRENT (HEATING)	**A**	10.24
	LOCKED ROTOR AMP.	**A**	54

MODEL	**INDOOR UNIT**		**ACC 28CR**	
	OUTDOOR UNIT		**ALC 28CR**	**ALC ~~30CR~~ 30DR**
	INSULATION GRADE		CLASS B	
	POWER SOURCE	**V/Ph/Hz**	220 - 240 / 1 / 50	
INDOOR MOTOR	**RATED INPUT POWER**	**W**	300	
	RATED RUNNING CURRENT	**A**	1.30	
	MOTOR OUTPUT	**W**	320	
	POLES		4	
OUTDOOR MOTOR	**INSULATION GRADE**		CLASS F	~~CLASS B~~ CLASS F
	POWER SOURCE	**V/Ph/Hz**	220 - 240 / 1 / 50	
	RATED INPUT POWER	**W**	142	220
	RATED RUNNING CURRENT	**A**	0.62	1.02
	MOTOR OUTPUT	**W**	75	145
	POLES		6	8
COMPRESSOR	**INSULATION GRADE**		CLASS E	-
	POWER SOURCE - 1Ø / <3Ø>	**V/Ph/Hz**	220 - 240 / 1 / 50 / <380 - 415 / 3 / 50>	
	CAPACITOR - 1Ø / <3Ø>	**µF**	50.0	50.0 / <NIL>
	RATED INPUT POWER (COOLING) - 1Ø / <3Ø>	**W**	2649	2570 / <2550>
	RATED INPUT POWER (HEATING) - 1Ø / <3Ø>	**W**	2196	2540 / <2520>
	RATED RUNNING CURRENT (COOLING) - 1Ø / <3Ø>	**A**	13.2	12.4 / <4.3>
	RATED RUNNING CURRENT (HEATING) - 1Ø / <3Ø>	**A**	11.5	12.3 / <4.2>
	LOCKED ROTOR AMP. - 1Ø / <3Ø>	**A**	66	82 / <40>

1) ALL SPECIFICATIONS ARE SUBJECTED TO CHANGE BY THE MANUFACTURER WITHOUT PRIOR NOTICE.
2) ALL SPECIFICATIONS ARE BEING TESTED AND COMPLY TO ISO 13253.

Electrical Data - Heat Pump (R22)

MODEL	INDOOR UNIT		ACC 38CR	
	OUTDOOR UNIT		ALC ~~35CR~~ 35DR	ALC ~~40CR~~ 40DR
INDOOR MOTOR	INSULATION GRADE		CLASS B	
	POWER SOURCE	V/Ph/Hz	220 - 240 / 1 / 50	
	RATED INPUT POWER	W	486	
	RATED RUNNING CURRENT	A	2.10	
	MOTOR OUTPUT	W	470	
	POLES		4	
OUTDOOR MOTOR	INSULATION GRADE		~~CLASS B~~ CLASS F	
	POWER SOURCE	V/Ph/Hz	220 - 240 / 1 / 50	
	RATED INPUT POWER	W	220	
	RATED RUNNING CURRENT	A	1.02	
	MOTOR OUTPUT	W	145	
	POLES		8	
COMPRESSOR	INSULATION GRADE		-	-
	POWER SOURCE - 1Ø / <3Ø>	V/Ph/Hz	220 - 240 / 1 / 50 / <380 - 415 / 3 / 50>	
	CAPACITOR - 1Ø / <3Ø>	µF	60.0	60.0 / <NIL>
	RATED INPUT POWER (COOLING) - 1Ø / <3Ø>	W	2597	3060 / <3030>
	RATED INPUT POWER (HEATING) - 1Ø / <3Ø>	W	2597	2770 / <2740>
	RATED RUNNING CURRENT (COOLING) - 1Ø / <3Ø>	A	13.40	15.0 / <4.4>
	RATED RUNNING CURRENT (HEATING) - 1Ø / <3Ø>	A	13.40	13.6 / <3.0>
	LOCKED ROTOR AMP. - 1Ø / <3Ø>	A	97	114 / <48>

MODEL	INDOOR UNIT		ACC 30CR	
	OUTDOOR UNIT		ALC 28CR	ALC ~~30CR~~ 30DR
INDOOR MOTOR	INSULATION GRADE		CLASS B	
	POWER SOURCE	V/Ph/Hz	220 - 240 / 1 / 50	
	RATED INPUT POWER	W	355	
	RATED RUNNING CURRENT	A	1.57	
	MOTOR OUTPUT	W	320	
	POLES		4	
OUTDOOR MOTOR	INSULATION GRADE		~~CLASS B~~ CLASS F	
	POWER SOURCE	V/Ph/Hz	220 - 240 / 1 / 50	
	RATED INPUT POWER	W	142	220
	RATED RUNNING CURRENT	A	0.62	1.02
	MOTOR OUTPUT	W	75	145
	POLES		6	8
COMPRESSOR	INSULATION GRADE		CLASS E	-
	POWER SOURCE - 1Ø / <3Ø>	V/Ph/Hz	220 - 240 / 1 / 50 / <380 - 415 / 3 / 50>	
	CAPACITOR - 1Ø / <3Ø>	µF	50.0	50.0 / <NIL>
	RATED INPUT POWER (COOLING) - 1Ø / <3Ø>	W	2656	2570 / <2550>
	RATED INPUT POWER (HEATING) - 1Ø / <3Ø>	W	2232	2540 / <2520>
	RATED RUNNING CURRENT (COOLING) - 1Ø / <3Ø>	A	13.3	12.4 / <4.3>
	RATED RUNNING CURRENT (HEATING) - 1Ø / <3Ø>	A	11.6	12.3 / <4.2>
	LOCKED ROTOR AMP. - 1Ø / <3Ø>	A	66	82 / <40>

1) ALL SPECIFICATIONS ARE SUBJECTED TO CHANGE BY THE MANUFACTURER WITHOUT PRIOR NOTICE.

2) ALL SPECIFICATIONS ARE BEING TESTED AND COMPLY TO ISO 13253.

Electrical Data - Heat Pump (R22)

MODEL	INDOOR UNIT		ACC 40CR	
	OUTDOOR UNIT		ALC ~~35CR~~ 35DR	ALC ~~40CR~~ 40DR
INDOOR MOTOR	INSULATION GRADE		CLASS B	
	POWER SOURCE	V/Ph/Hz	220 - 240 / 1 / 50	
	RATED INPUT POWER	W	448	
	RATED RUNNING CURRENT	A	1.98	
	MOTOR OUTPUT	W	400	
	POLES		4	
OUTDOOR MOTOR	INSULATION GRADE		~~CLASS B~~ CLASS F	
	POWER SOURCE	V/Ph/Hz	220 - 240 / 1 / 50	
	RATED INPUT POWER	W	220	
	RATED RUNNING CURRENT	A	1.02	
	MOTOR OUTPUT	W	145	
	POLES		8	
COMPRESSOR	INSULATION GRADE		-	-
	POWER SOURCE - 1Ø / <3Ø>	V/Ph/Hz	220 - 240 / 1 / 50 / <380 - 415 / 3 / 50>	
	CAPACITOR - 1Ø / <3Ø>	µF	60.0	60.0 / <NIL>
	RATED INPUT POWER (COOLING) - 1Ø / <3Ø>	W	2597	3060 / <3030>
	RATED INPUT POWER (HEATING) - 1Ø / <3Ø>	W	2597	2770 / <2740>
	RATED RUNNING CURRENT (COOLING) - 1Ø / <3Ø>	A	13.40	15.0 / <4.4>
	RATED RUNNING CURRENT (HEATING) - 1Ø / <3Ø>	A	13.40	13.6 / <3.0>
	LOCKED ROTOR AMP. - 1Ø / <3Ø>	A	97	114 / <48>

MODEL	INDOOR UNIT		ACC 50CR	ACC 60CR
	OUTDOOR UNIT		ALC ~~50CR~~ 35DR	ALC ~~61CR~~ 40DR
INDOOR MOTOR	INSULATION GRADE		CLASS B	
	POWER SOURCE	V/Ph/Hz	220 - 240 / 1 / 50	
	RATED INPUT POWER	W	510	748
	RATED RUNNING CURRENT	A	2.26	3.20
	MOTOR OUTPUT	W	480	600
	POLES		4	4
OUTDOOR MOTOR	INSULATION GRADE		~~CLASS B~~ CLASS F	CLASS F
	POWER SOURCE	V/Ph/Hz	220 - 240 / 1 / 50	
	RATED INPUT POWER	W	220	258
	RATED RUNNING CURRENT	A	1.02	1.20
	MOTOR OUTPUT	W	145	400
	POLES		8	8
COMPRESSOR	INSULATION GRADE		-	-
	POWER SOURCE	V/Ph/Hz	380 - 415 / 3 / 50	
	CAPACITOR	µF	NIL	NIL
	RATED INPUT POWER (COOLING)	W	4317	5000
	RATED INPUT POWER (HEATING)	W	3717	3970
	RATED RUNNING CURRENT (COOLING)	A	7.9	8.5
	RATED RUNNING CURRENT (HEATING)	A	4.9	7.3
	LOCKED ROTOR AMP.	A	66	74

1) ALL SPECIFICATIONS ARE SUBJECTED TO CHANGE BY THE MANUFACTURER WITHOUT PRIOR NOTICE.
2) ALL SPECIFICATIONS ARE BEING TESTED AND COMPLY TO ISO 13253.

Electrical Data - Cooling Only (R410A)

MODEL	INDOOR UNIT		A5CC 10C	A5CC 15C
	OUTDOOR UNIT		A5LC 10C	A5LC 15C
INDOOR MOTOR	INSULATION GRADE		CLASS E	
	POWER SOURCE	V/Ph/Hz	220 - 240 / 1 / 50	
	RATED INPUT POWER	W	65	96
	RATED RUNNING CURRENT	A	0.29	0.42
	MOTOR OUTPUT	W	30	50
	POLES		4	4
OUTDOOR MOTOR	INSULATION GRADE		CLASS B	
	POWER SOURCE	V/Ph/Hz	220 - 240 / 1 / 50	
	RATED INPUT POWER	W	52	59
	RATED RUNNING CURRENT	A	0.23	0.26
	MOTOR OUTPUT	W	35	35
	POLES		6	6
COMPRESSOR	INSULATION GRADE		CLASS E	
	POWER SOURCE	V/Ph/Hz	220 - 240 / 1 / 50	
	CAPACITOR	µF	25.0	35.0
	RATED INPUT POWER	W	844	1142
	RATED RUNNING CURRENT	A	3.5	5.0
	LOCKED ROTOR AMP.	A	19	24

MODEL	INDOOR UNIT		A5CC 20C	A5CC 25C
	OUTDOOR UNIT		A5LC 20C	A5LC 25C
INDOOR MOTOR	INSULATION GRADE		CLASS E	
	POWER SOURCE	V/Ph/Hz	220 - 240 / 1 / 50	
	RATED INPUT POWER	W	135	152
	RATED RUNNING CURRENT	A	0.60	0.67
	MOTOR OUTPUT	W	80	100
	POLES		4	4
OUTDOOR MOTOR	INSULATION GRADE		CLASS B ~~CLASS B~~	CLASS F
	POWER SOURCE	V/Ph/Hz	220 - 240 / 1 / 50	
	RATED INPUT POWER	W	117	132
	RATED RUNNING CURRENT	A	0.51	0.58
	MOTOR OUTPUT	W	64	64
	POLES		6	6
COMPRESSOR	INSULATION GRADE		CLASS E	
	POWER SOURCE - 1Ø / <3Ø>	V/Ph/Hz	220 - 240 / 1 / 50 / <380 - 415 / 3 / 50>	
	CAPACITOR - 1Ø / <3Ø>	µF	50.0 / <NIL>	50.0 / <NIL>
	RATED INPUT POWER - 1Ø / <3Ø>	W	1505 / <1536>	1719 / <1990>
	RATED RUNNING CURRENT - 1Ø / <3Ø>	A	6.5 / <3.0>	7.6 / <3.8>
	LOCKED ROTOR AMP. - 1Ø / <3Ø>	A	27 / <19>	63 / <26>

1) ALL SPECIFICATIONS ARE SUBJECTED TO CHANGE BY THE MANUFACTURER WITHOUT PRIOR NOTICE.
2) ALL SPECIFICATIONS ARE BEING TESTED AND COMPLY TO ISO 13253.

Electrical Data - Cooling Only (R410A)

MODEL	**INDOOR UNIT**		**A5CC 28C**
	OUTDOOR UNIT		**A5LC 28C**
INDOOR MOTOR	**INSULATION GRADE**		CLASS B
	POWER SOURCE	**V/Ph/Hz**	220 - 240 / 1 / 50
	RATED INPUT POWER	**W**	300
	RATED RUNNING CURRENT	**A**	1.30
	MOTOR OUTPUT	**W**	320
	POLES		4
OUTDOOR MOTOR	**INSULATION GRADE**		~~CLASS B~~ CLASS F
	POWER SOURCE	**V/Ph/Hz**	220 - 240 / 1 / 50
	RATED INPUT POWER	**W**	142
	RATED RUNNING CURRENT	**A**	0.62
	MOTOR OUTPUT	**W**	75
	POLES		6
COMPRESSOR	**INSULATION GRADE**		E
	POWER SOURCE - 1Ø / <3Ø>	**V/Ph/Hz**	220 - 240 / 1 / 50 / <380 / 3 / 50>
	CAPACITOR - 1Ø / <3Ø>	**µF**	50.0 / <NIL>
	RATED INPUT POWER - 1Ø / <3Ø>	**W**	2450 / <2434>
	RATED RUNNING CURRENT - 1Ø / <3Ø>	**A**	10.9 / <4.3>
	LOCKED ROTOR AMP. - 1Ø / <3Ø>	**A**	65 / <26>

MODEL	**INDOOR UNIT**		**A5CC 38C**	
	OUTDOOR UNIT		**A5LC ~~35C~~ 35D**	**A5LC ~~40C~~ 40D**
INDOOR MOTOR	**INSULATION GRADE**		CLASS B	CLASS B
	POWER SOURCE	**V/Ph/Hz**	220 - 240 / 1 / 50	220 - 240 / 1 / 50
	RATED INPUT POWER	**W**	503	503
	RATED RUNNING CURRENT	**A**	2.27	2.27
	MOTOR OUTPUT	**W**	470	470
	POLES		4	4
OUTDOOR MOTOR	**INSULATION GRADE**		~~CLASS B~~ CLASS F	~~CLASS B~~ CLASS F
	POWER SOURCE	**V/Ph/Hz**	220 - 240 / 1 / 50	220 - 240 / 1 / 50
	RATED INPUT POWER	**W**	220	220
	RATED RUNNING CURRENT	**A**	1.02	1.02
	MOTOR OUTPUT	**W**	145	145
	POLES		8	8
COMPRESSOR	**INSULATION GRADE**		-	-
	POWER SOURCE - 1Ø / <3Ø>	**V/Ph/Hz**	220 - 240 / 1 / 50 / <380 - 415 / 3 / 50>	220 - 240 / 1 / 50 / <380 - 415 / 3 / 50>
	CAPACITOR - 1Ø / <3Ø>	**µF**	NIL	NIL
	RATED INPUT POWER - 1Ø / <3Ø>	**W**	2794	3564
	RATED RUNNING CURRENT - 1Ø / <3Ø>	**A**	5.0	15.8 / <6.4>
	LOCKED ROTOR AMP. - 1Ø / <3Ø>	**A**	48 / <97>	64

1) ALL SPECIFICATIONS ARE SUBJECTED TO CHANGE BY THE MANUFACTURER WITHOUT PRIOR NOTICE.
2) ALL SPECIFICATIONS ARE BEING TESTED AND COMPLY TO ISO 13253.

Electrical Data - Cooling Only (R410A)

MODEL	INDOOR UNIT		A5CC 50C	A5CC 60C
	OUTDOOR UNIT		A5LC ~~50C~~ 50D	A5LC ~~61C~~ 61D
INDOOR MOTOR	INSULATION GRADE		CLASS B	
	POWER SOURCE	V/Ph/Hz	220 - 240 / 1 / 50	
	RATED INPUT POWER	W	515	659
	RATED RUNNING CURRENT	A	2.32	2.91
	MOTOR OUTPUT	W	480	600
	POLES		4	4
OUTDOOR MOTOR	INSULATION GRADE		~~CLASS B~~ CLASS F	
	POWER SOURCE	V/Ph/Hz	220 - 240 / 1 / 50	
	RATED INPUT POWER	W	575	575
	RATED RUNNING CURRENT	A	2.54	2.54
	MOTOR OUTPUT	W	400	400
	POLES		6	6
COMPRESSOR	INSULATION GRADE		-	-
	POWER SOURCE	V/Ph/Hz	380 - 415 / 3 / 50	
	CAPACITOR	µF	NIL	NIL
	RATED INPUT POWER	W	4021	4524
	RATED RUNNING CURRENT	A	7.3	7.9
	LOCKED ROTOR AMP.	A	74	74

1) ALL SPECIFICATIONS ARE SUBJECTED TO CHANGE BY THE MANUFACTURER WITHOUT PRIOR NOTICE.
2) ALL SPECIFICATIONS ARE BEING TESTED AND COMPLY TO ISO 13253.

Electrical Data - Heat pump (R410A)

MODEL	INDOOR UNIT		A5CC 10CR	A5CC 15CR
	OUTDOOR UNIT		A5LC 10CR	A5LC 15CR
INDOOR MOTOR	INSULATION GRADE		CLASS E	
	POWER SOURCE	V/Ph/Hz	220 - 240 / 1 / 50	
	RATED INPUT POWER	W	65	96
	RATED RUNNING CURRENT	A	0.29	0.42
	MOTOR OUTPUT	W	30	50
	POLES		4	4
OUTDOOR MOTOR	INSULATION GRADE		CLASS B	
	POWER SOURCE	V/Ph/Hz	220 - 240 / 1 / 50	
	RATED INPUT POWER	W	52	59
	RATED RUNNING CURRENT	A	0.23	0.26
	MOTOR OUTPUT	W	35	35
	POLES		6	6
COMPRESSOR	INSULATION GRADE		CLASS E	
	POWER SOURCE	V/Ph/Hz	220 - 240 / 1 / 50	
	CAPACITOR	µF	25.0	35.0
	RATED INPUT POWER (COOLING)	W	844	1142
	RATED INPUT POWER (HEATING)	W	696	992
	RATED RUNNING CURRENT (COOLING)	A	3.8	5.0
	RATED RUNNING CURRENT (HEATING)	A	3.2	4.5
	LOCKED ROTOR AMP.	A	19	24

MODEL	INDOOR UNIT		A5CC 20CR	A5CC 25CR
	OUTDOOR UNIT		A5LC 20CR	A5LC 25CR
INDOOR MOTOR	INSULATION GRADE		CLASS E	
	POWER SOURCE	V/Ph/Hz	220 - 240 / 1 / 50	
	RATED INPUT POWER	W	135	152
	RATED RUNNING CURRENT	A	0.60	0.67
	MOTOR OUTPUT	W	80	100
	POLES		4	4
OUTDOOR MOTOR	INSULATION GRADE		CLASS B ~~CLASS B~~	CLASS F
	POWER SOURCE	V/Ph/Hz	220 - 240 / 1 / 50	
	RATED INPUT POWER	W	117	132
	RATED RUNNING CURRENT	A	0.51	0.58
	MOTOR OUTPUT	W	64	64
	POLES		6	6
COMPRESSOR	INSULATION GRADE		CLASS E	
	POWER SOURCE - 1Ø / <3Ø>	V/Ph/Hz	220 - 240 / 1 / 50 / <380 - 415 / 3 / 50>	
	CAPACITOR - 1Ø / <3Ø>	µF	50.0 / <NIL>	50.0 / <NIL>
	RATED INPUT POWER (COOLING) - 1Ø / <3Ø>	W	1505 / <1536>	1719 / <1990>
	RATED INPUT POWER (HEATING) - 1Ø / <3Ø>	W	1345 / <1306>	1669 / <1883>
	RATED RUNNING CURRENT (COOLING) - 1Ø / <3Ø>	A	6.5 / <3.0>	7.6 / <3.8>
	RATED RUNNING CURRENT (HEATING) - 1Ø / <3Ø>	A	6.3 / <2.5>	7.5 / <3.6>
	LOCKED ROTOR AMP. - 1Ø / <3Ø>	A	27 / <19>	63 / <26>

1) ALL SPECIFICATIONS ARE SUBJECTED TO CHANGE BY THE MANUFACTURER WITHOUT PRIOR NOTICE.

2) ALL SPECIFICATIONS ARE BEING TESTED AND COMPLY TO ISO 13253.

Electrical Data - Heat pump (R410A)

MODEL	**INDOOR UNIT**		**A5CC 28CR**
	OUTDOOR UNIT		**A5LC 28CR**
INDOOR MOTOR	**INSULATION GRADE**		CLASS B
	POWER SOURCE	**V/Ph/Hz**	220 - 240 / 1 / 50
	RATED INPUT POWER	**W**	300
	RATED RUNNING CURRENT	**A**	1.30
	MOTOR OUTPUT	**W**	320
	POLES		4
OUTDOOR MOTOR	**INSULATION GRADE**		~~CLASS B~~ CLASS F
	POWER SOURCE	**V/Ph/Hz**	220 - 240 / 1 / 50
	RATED INPUT POWER	**W**	142
	RATED RUNNING CURRENT	**A**	0.62
	MOTOR OUTPUT	**W**	75
	POLES		6
COMPRESSOR	**INSULATION GRADE**		E
	POWER SOURCE - 1Ø / <3Ø>	**V/Ph/Hz**	220 - 240 / 1 / 50 / <380 / 3 / 50>
	CAPACITOR - 1Ø / <3Ø>	**µF**	50.0 / <NIL>
	RATED INPUT POWER (COOLING) - 1Ø / <3Ø>	**W**	2450 / <2434>
	RATED INPUT POWER (HEATING) - 1Ø / <3Ø>	**A**	1987 / <2086>
	RATED RUNNING CURRENT (COOLING) - 1Ø / <3Ø>	**A**	10.9 / <4.3>
	RATED RUNNING CURRENT (HEATING) - 1Ø / <3Ø>	**A**	9.3 / <3.9>
	LOCKED ROTOR AMP. - 1Ø / <3Ø>	**A**	65 / <26>

MODEL	**INDOOR UNIT**		**A5CC 38CR**	
	OUTDOOR UNIT		**A5LC ~~35CR~~** 35DR	**A5LC ~~40CR~~** 40DR
INDOOR MOTOR	**INSULATION GRADE**		CLASS B	CLASS B
	POWER SOURCE	**V/Ph/Hz**	220 - 240 / 1 / 50	220 - 240 / 1 / 50
	RATED INPUT POWER	**W**	503	503
	RATED RUNNING CURRENT	**A**	2.27	2.27
	MOTOR OUTPUT	**W**	470	470
	POLES		4	4
OUTDOOR MOTOR	**INSULATION GRADE**		~~CLASS B~~ CLASS F	~~CLASS B~~ CLASS F
	POWER SOURCE	**V/Ph/Hz**	220 - 240 / 1 / 50	220 - 240 / 1 / 50
	RATED INPUT POWER	**W**	220	220
	RATED RUNNING CURRENT	**A**	1.06	1.02
	MOTOR OUTPUT	**W**	145	145
	POLES		8	8
COMPRESSOR	**INSULATION GRADE**		-	-
	POWER SOURCE - 1Ø / <3Ø>	**V/Ph/Hz**	220 - 240 / 1 / 50 / <380 - 415 / 3 / 50>	220 - 240 / 1 / 50 / <380 - 415 / 3 / 50>
	CAPACITOR -	**µF**	60 / N/A	NIL
	RATED INPUT POWER (COOLING) - 1Ø / <3Ø>	**W**	2564	3564
	RATED INPUT POWER (HEATING) - 1Ø / <3Ø>	**W**	2264	3514
	RATED RUNNING CURRENT (COOLING) - 1Ø / <3Ø>	**A**	11.9	15.8 / <6.4>
	RATED RUNNING CURRENT (HEATING) - 1Ø / <3Ø>	**A**	10.7	6.3
	LOCKED ROTOR AMP. - 1Ø / <3Ø>	**A**	48 / <97>	64

1) ALL SPECIFICATIONS ARE SUBJECTED TO CHANGE BY THE MANUFACTURER WITHOUT PRIOR NOTICE.
2) ALL UNITS ARE BEING TESTED AND COMPLY TO ISO 13253.

Electrical Data - Heat pump (R410A)

MODEL	**INDOOR UNIT**		**A5CC50CR**	**A5CC60CR**
	OUTDOOR UNIT		**A5LC ~~50CR~~** 50DR	**A5LC ~~61CR~~** 61DR
INDOOR MOTOR	**INSULATION GRADE**		CLASS B	
	POWER SOURCE	**V/Ph/Hz**	220 - 240 / 1 / 50	
	RATED INPUT POWER	**W**	515	659
	RATED RUNNING CURRENT	**A**	2.32	2.91
	MOTOR OUTPUT	**W**	480	600
	POLES		4	4
OUTDOOR MOTOR	**INSULATION GRADE**		~~CLASS B~~ CLASS F	
	POWER SOURCE	**V/Ph/Hz**	220 - 240 / 1 / 50	
	RATED INPUT POWER	**W**	575	575
	RATED RUNNING CURRENT	**A**	2.54	2.54
	MOTOR OUTPUT	**W**	400	400
	POLES		6	6
COMPRESSOR	**INSULATION GRADE**		-	-
	POWER SOURCE	**V/Ph/Hz**	380 - 415 / 3 / 50	
	CAPACITOR	**µF**	NIL	NIL
	RATED INPUT POWER (COOLING)	**W**	4021	4524
	RATED INPUT POWER (HEATING)	**W**	3441	4444
	RATED RUNNING CURRENT (COOLING)	**A**	7.3	7.9
	RATED RUNNING CURRENT (HEATING)	**A**	6.6	7.9
	LOCKED ROTOR AMP.	**A**	74	74

1) ALL SPECIFICATIONS ARE SUBJECTED TO CHANGE BY THE MANUFACTURER WITHOUT PRIOR NOTICE.
2) ALL UNITS ARE BEING TESTED AND COMPLY TO ISO 13253.

10. WIRING DIAGRAMS

Cooling only

Indoor Unit
Model : ACC / A5CC 10C, A5CC 15C

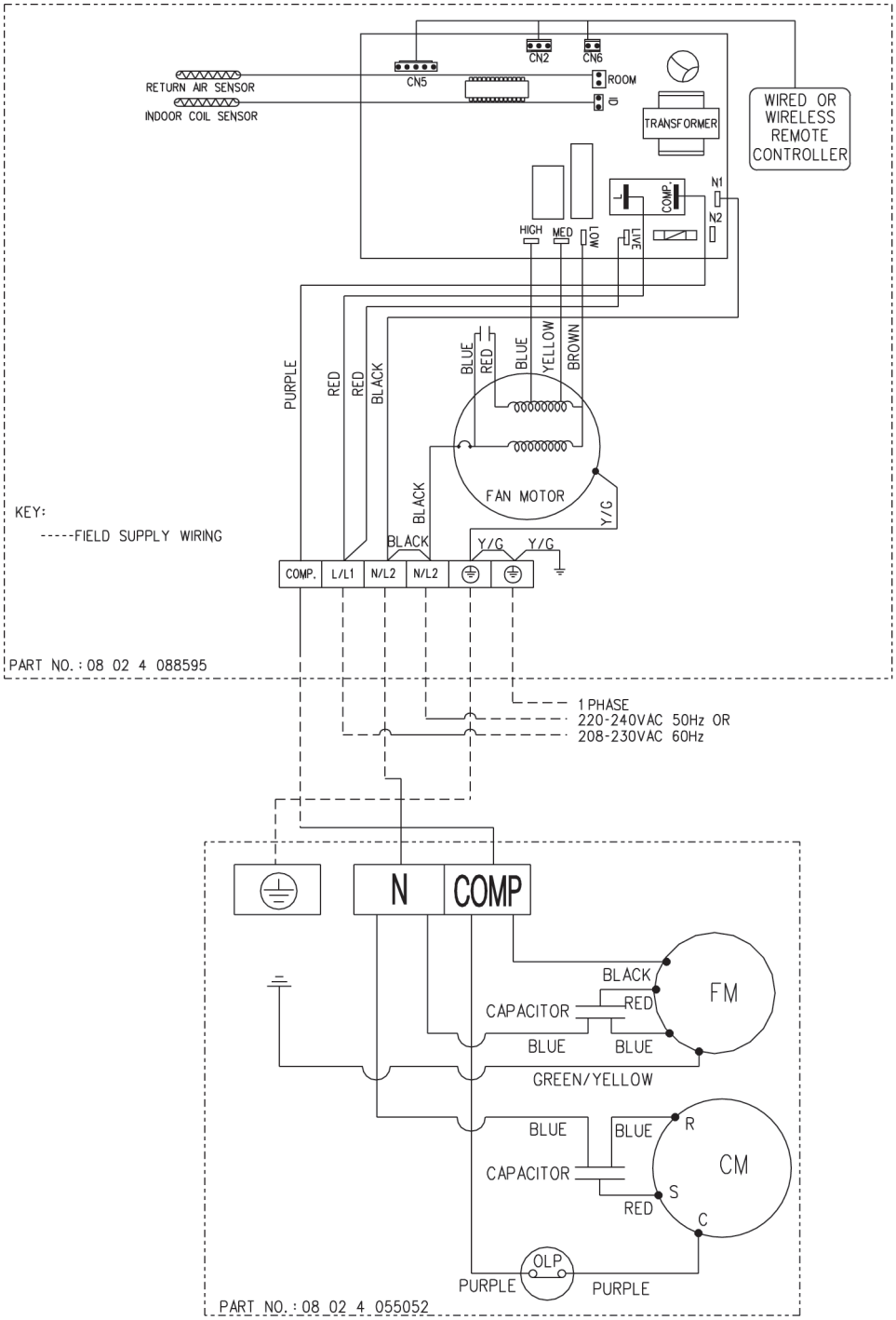

Outdoor Unit
Model : ALC / A5LC 10, A5LC 15C

Indoor Unit
Model : MCC 015C

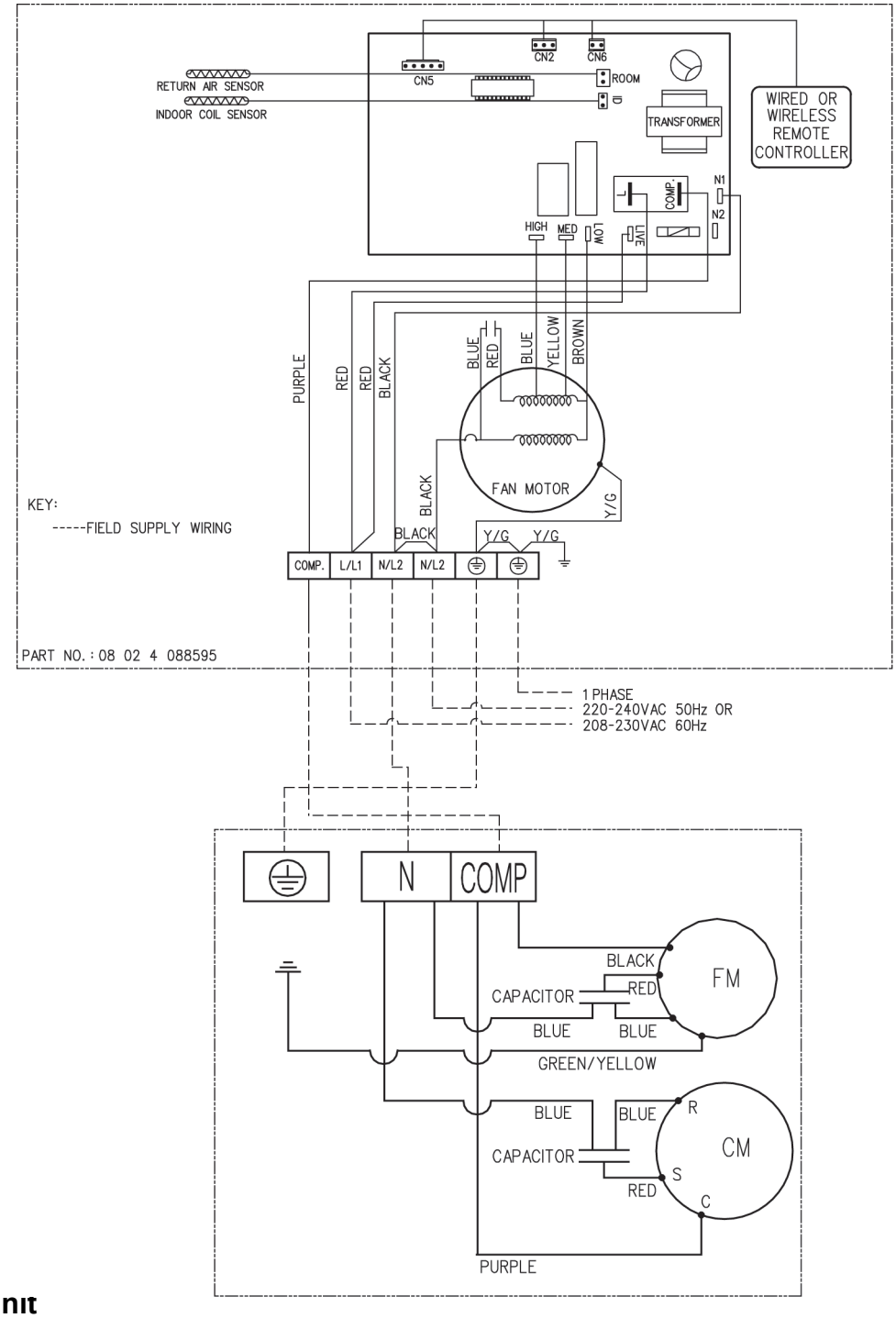

Outdoor Unit
Model : MLC 015C

Indoor Unit
Model : ACC / A5CC 20 / 25C

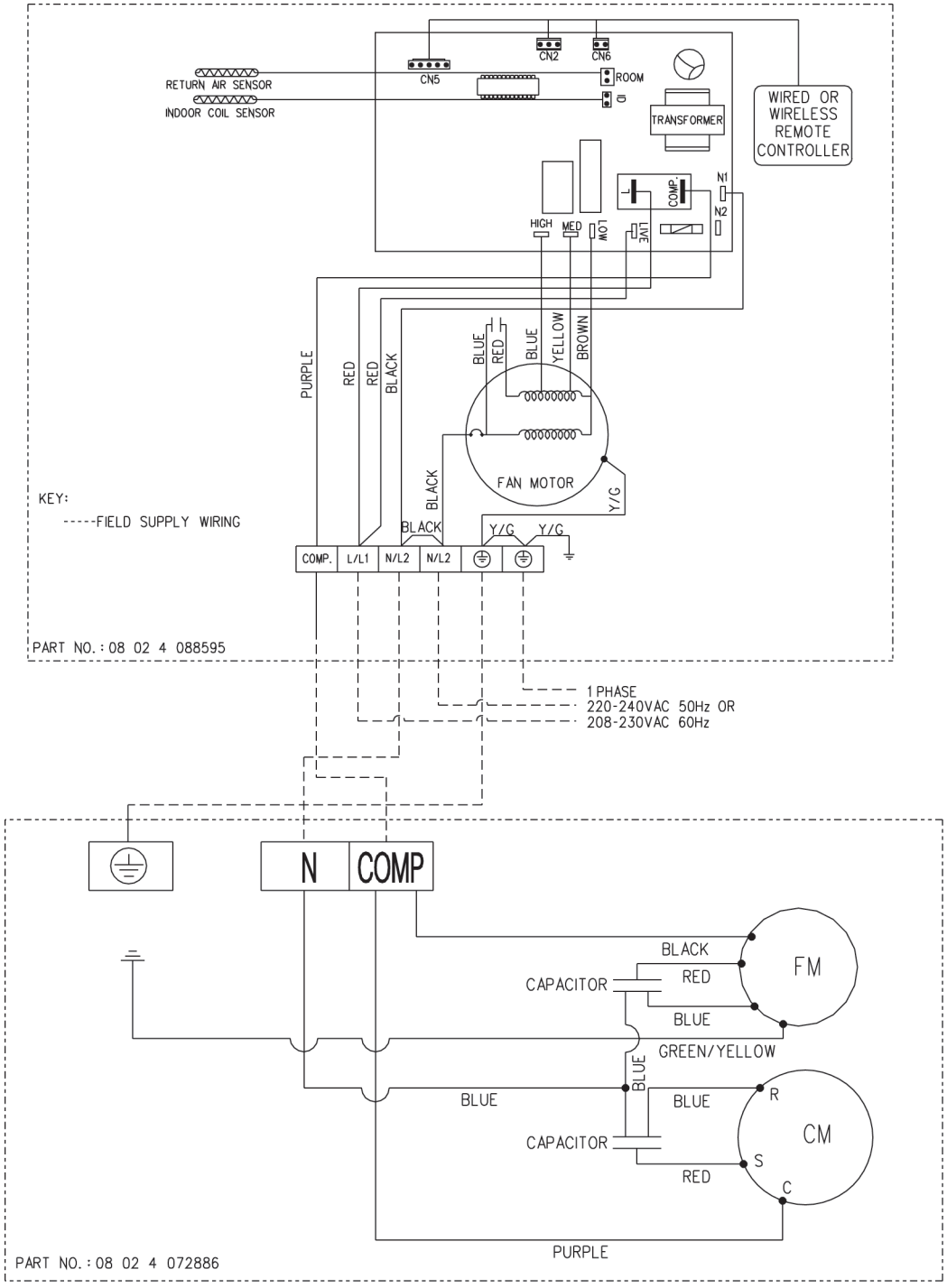

Outdoor Unit
Model : ALC / A5LC 20 / 25C, ALC 18C

Indoor Unit
Model : ACC / A5CC 28C, ACC 30C

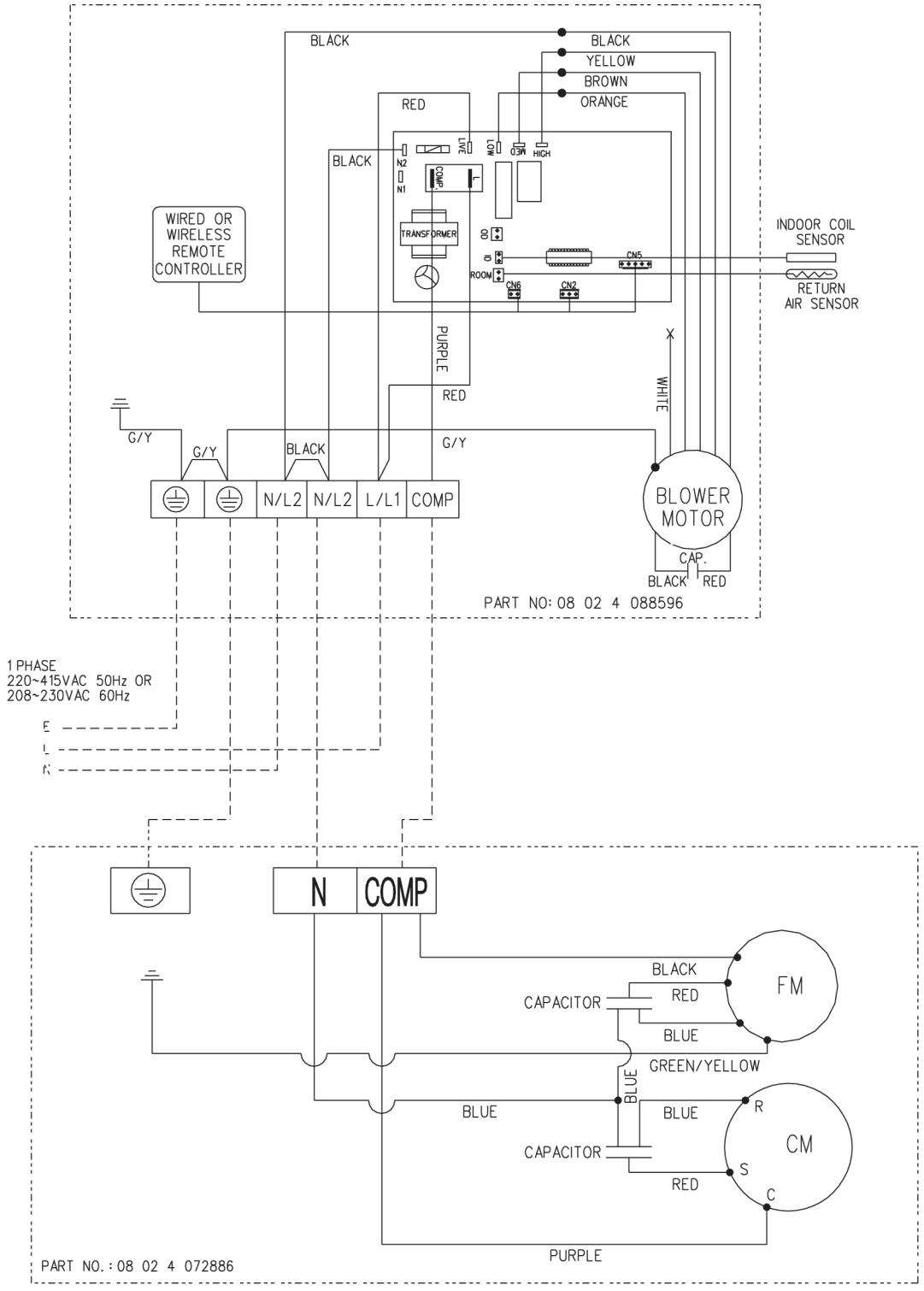

Outdoor Unit
Model : ALC/ A5LC 28C

Indoor Unit
Model : ACC 28 / 30C

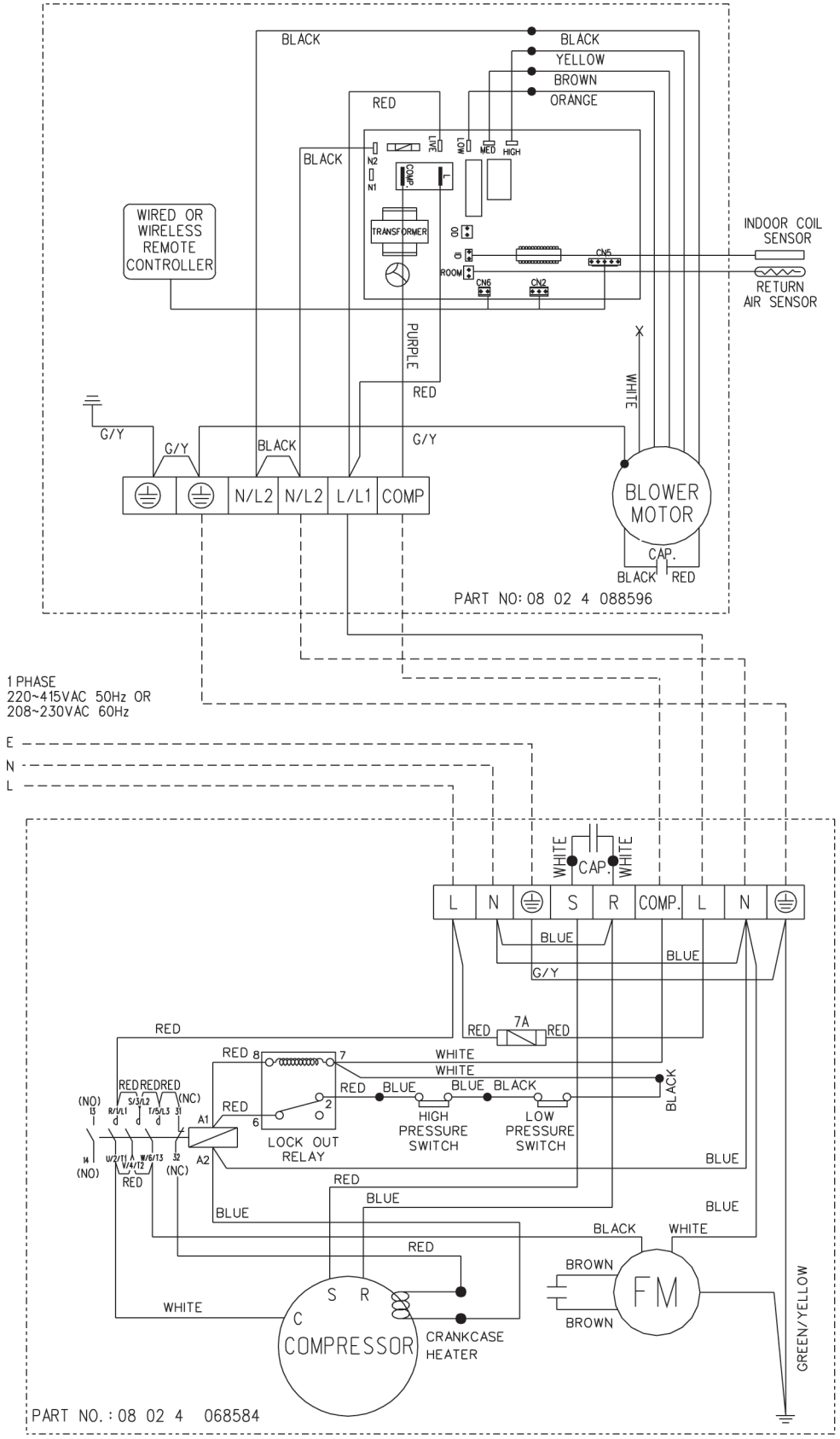

Outdoor Unit
Model : ALC / A5LC ~~30C~~ (1 Phase)
30D

Indoor Unit
Model : ACC 28 / 30C

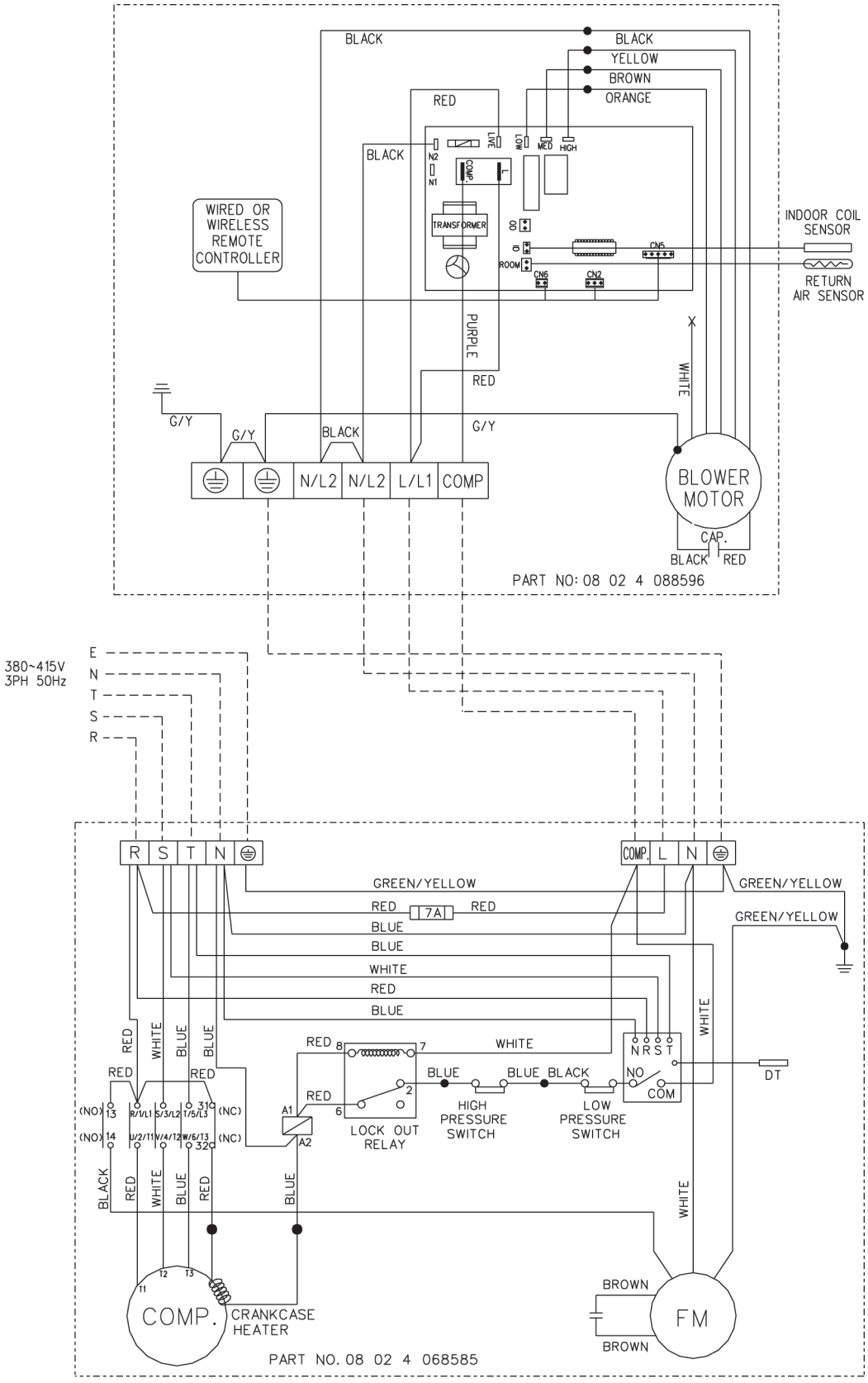

Outdoor Unit
Model : ALC ~~30C~~ (3 Phase)
30D

Indoor Unit
Model : ACC 38 / 40C

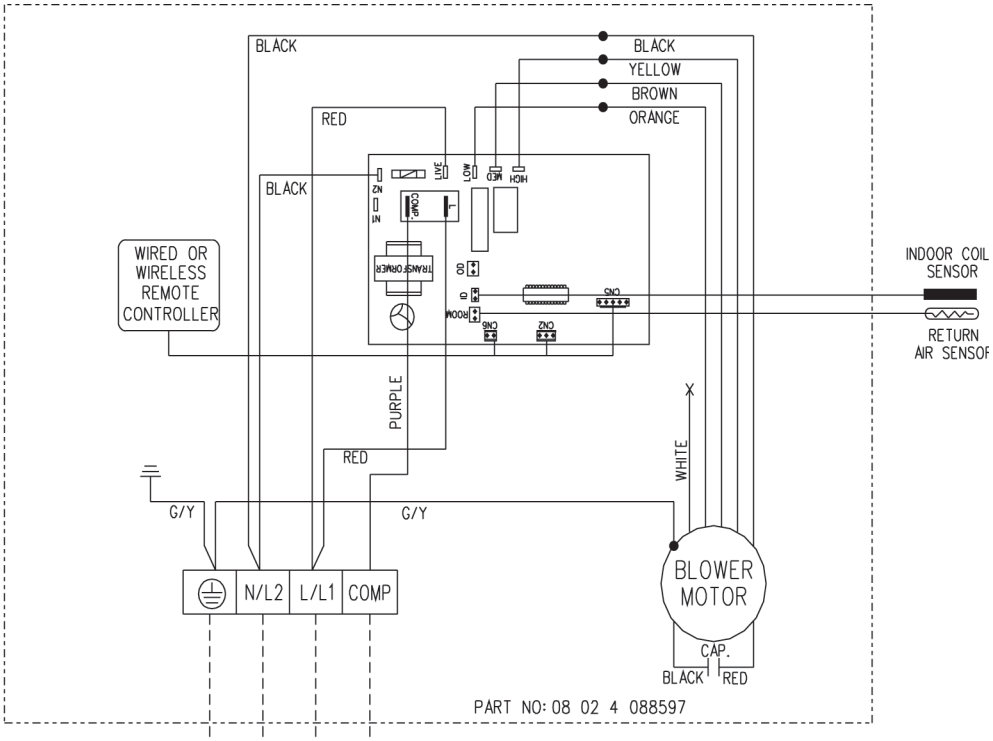

Outdoor Unit 35 / 40D
Model : ALC ~~35 / 40C~~ (1 Phase)

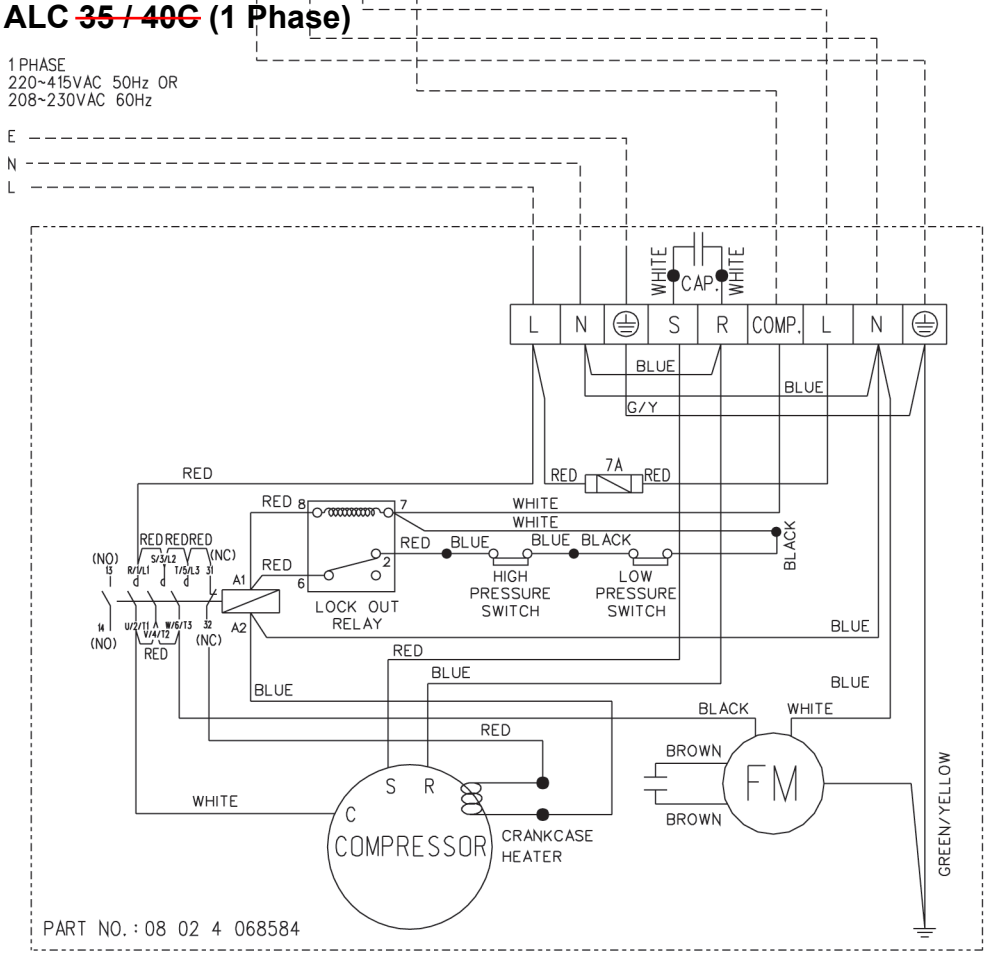

Indoor Unit
Model : ACC 38 / 40 / 50C, A5CC 38C

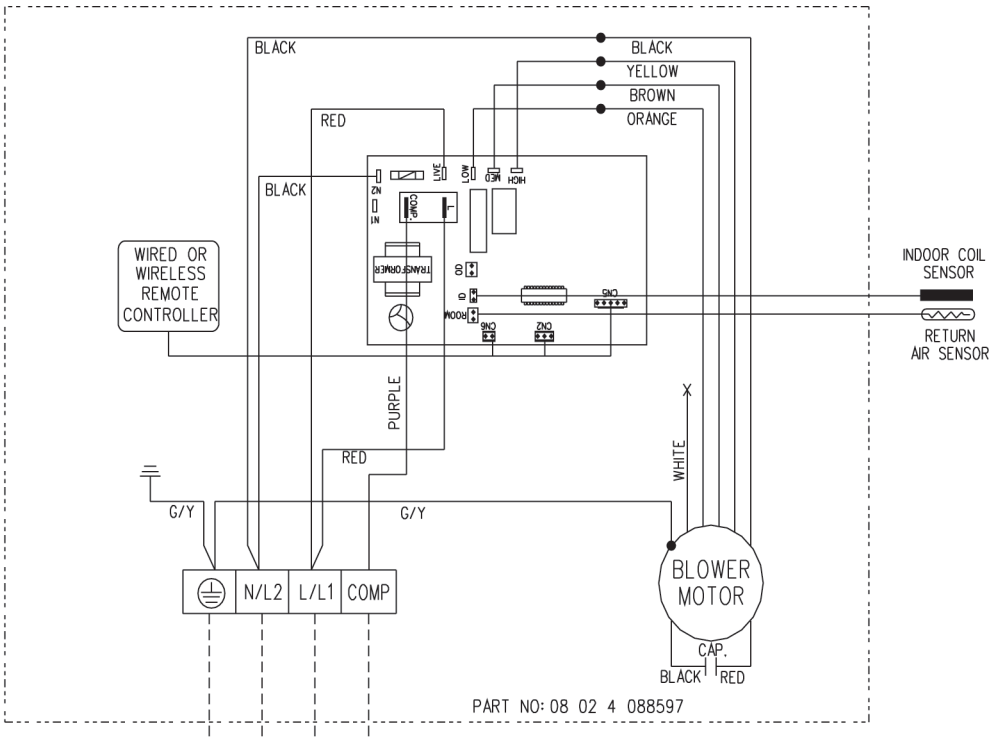

Outdoor Unit 40 / 50D 40D
Model : ALC ~~40 / 50C~~, A5LC ~~40C~~ (3 Phase)

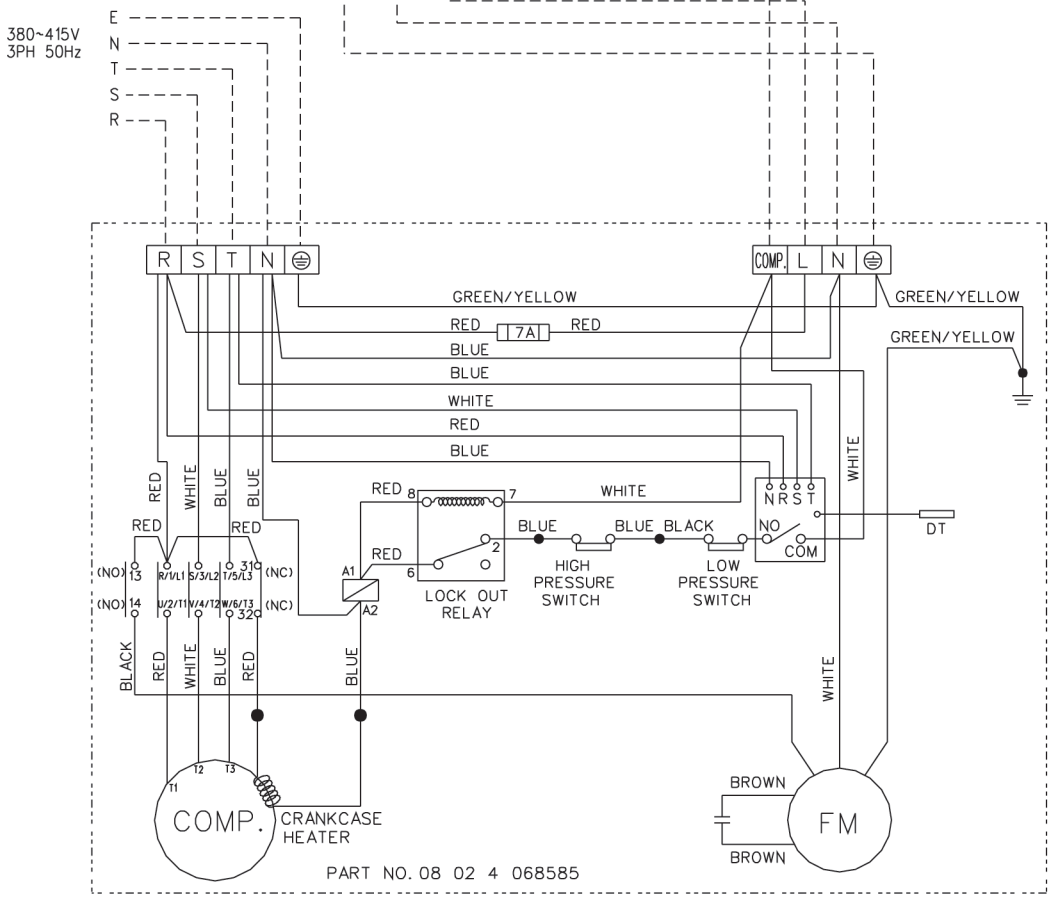

Indoor Unit
Model : A5CC 50 / 60C

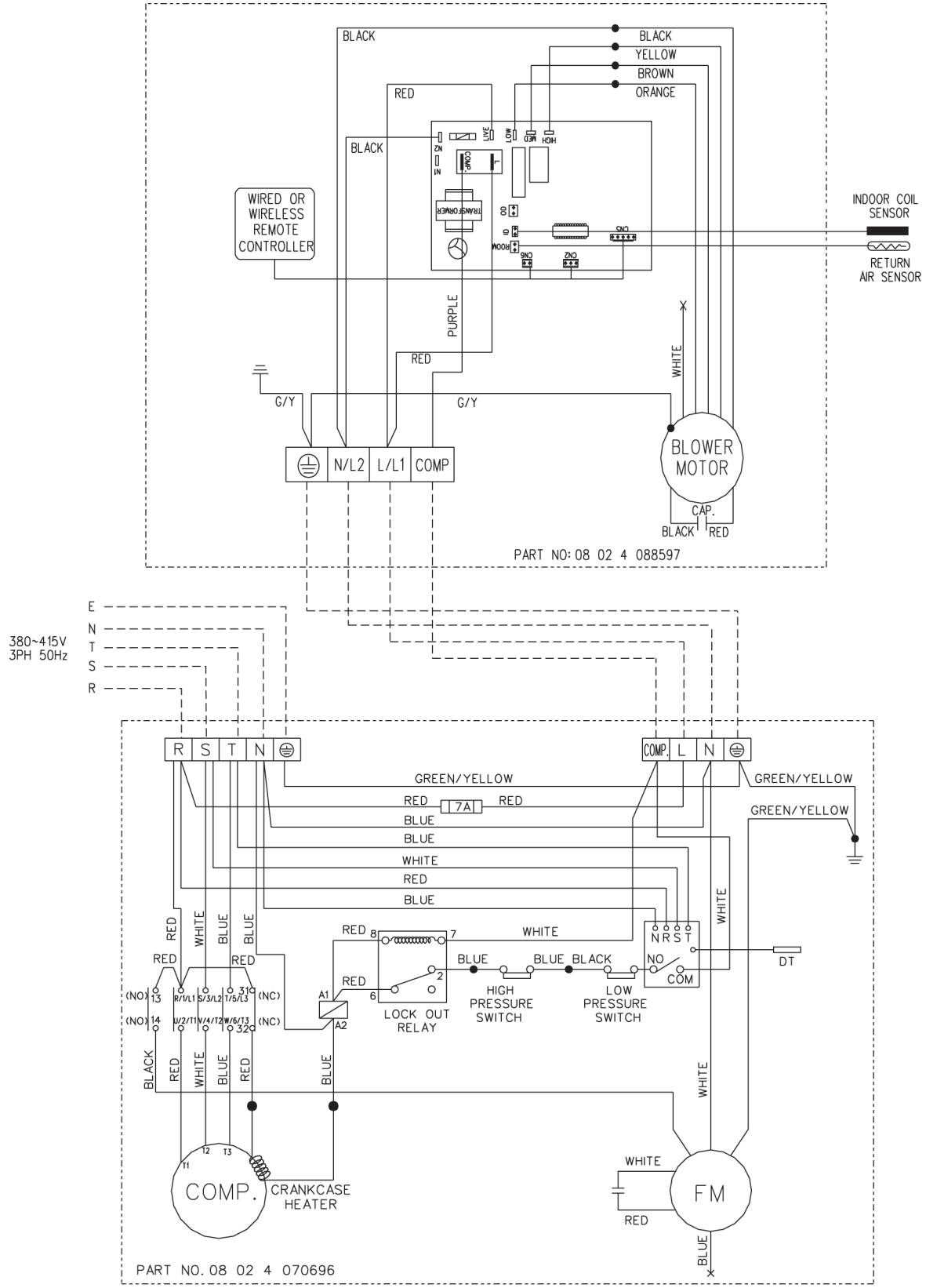

Outdoor Unit
Model : A5LC ~~50 / 61C~~
50 / 61D

Indoor Unit
Model : ACC 60C

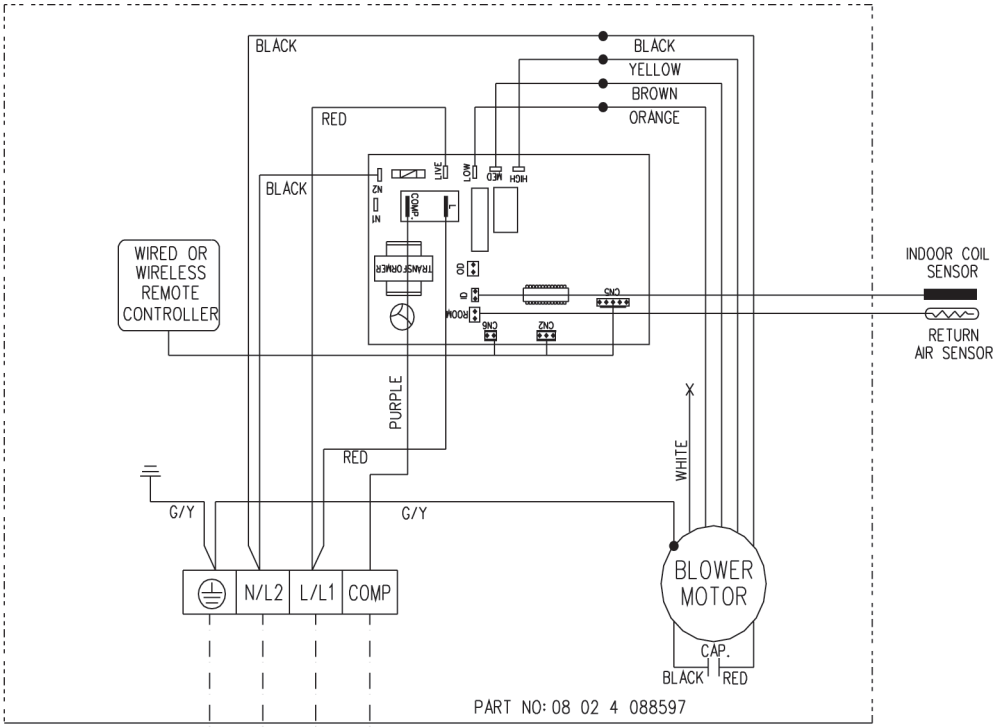

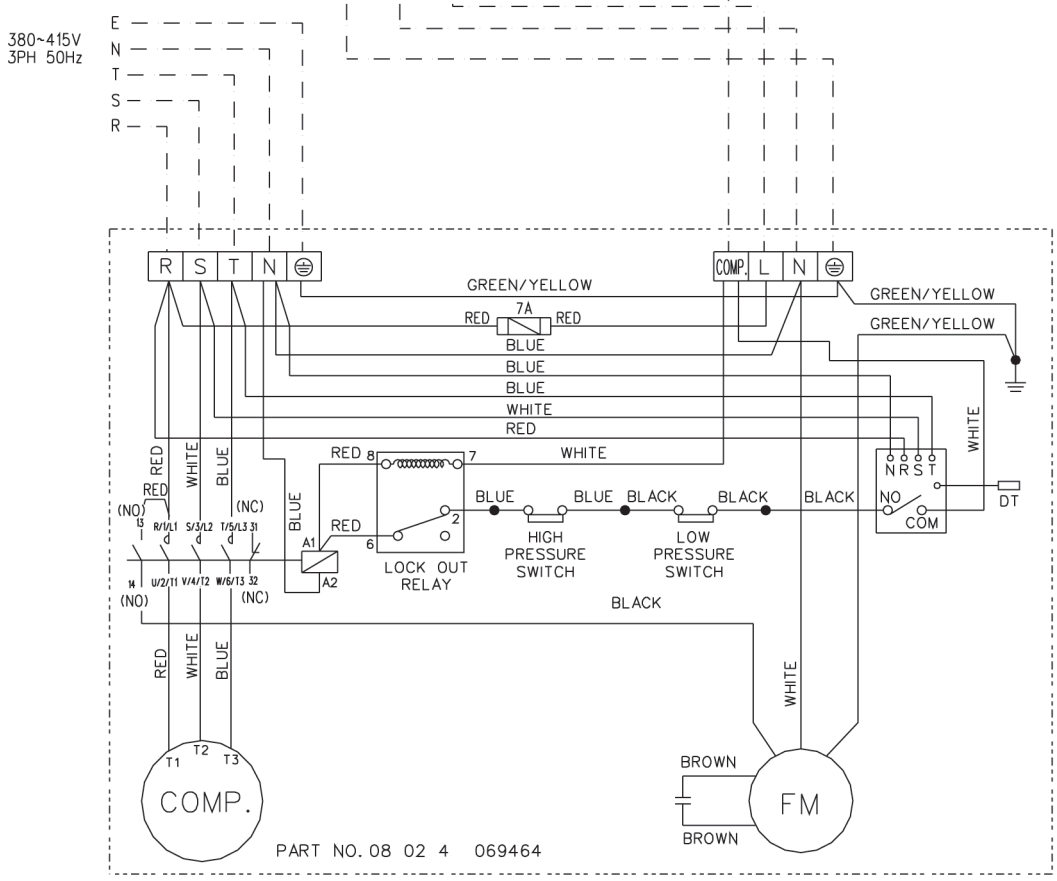

Outdoor Unit
Model : ALC ~~61C~~
61D

Heatpump

Indoor Unit
Model : ACC 10CR, A5CC 10 / 15CR

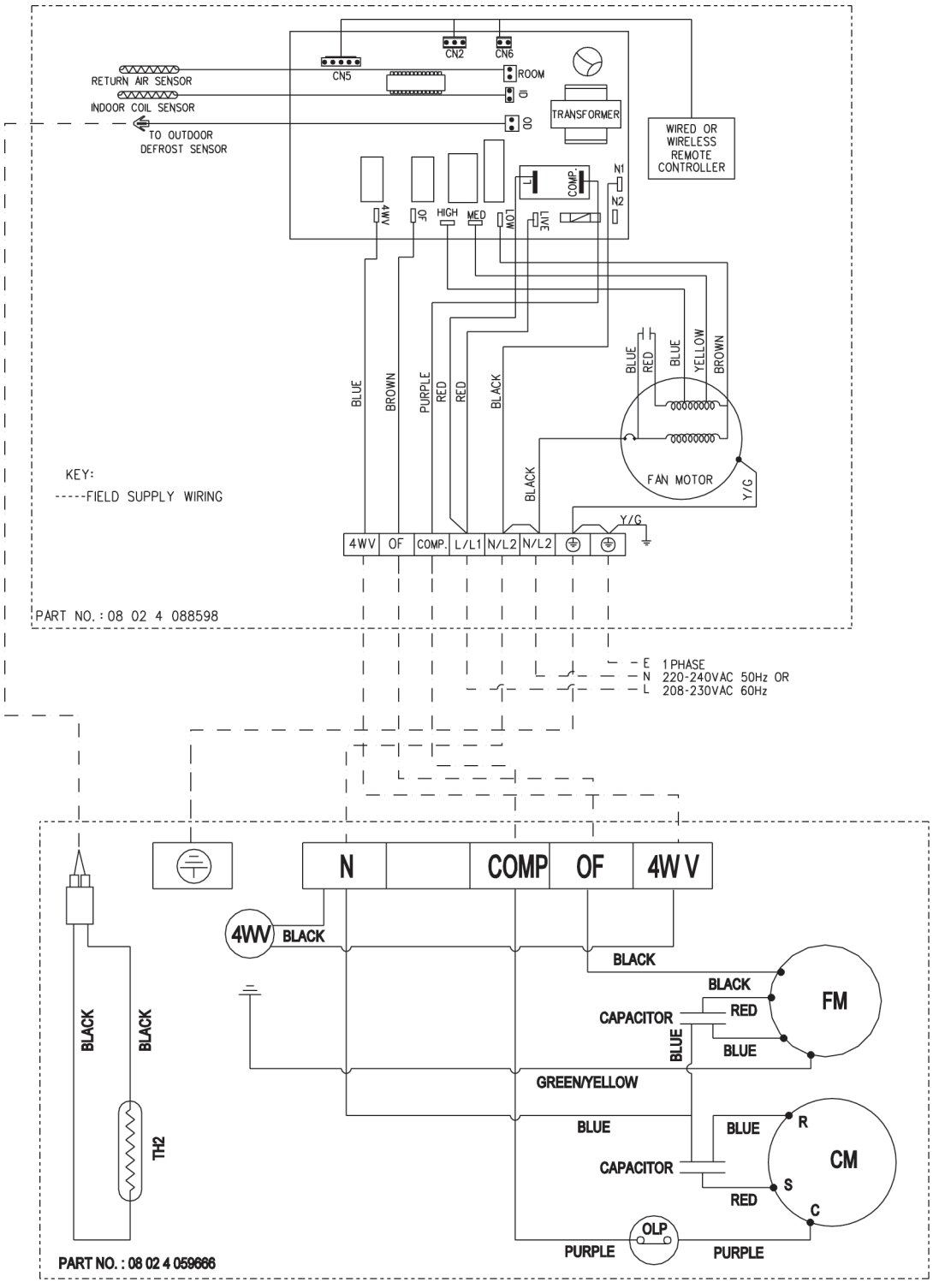

Outdoor Unit
Model : ALC 10CR, A5LC 10 / 15CR

Indoor Unit
Model : ACC 15CR

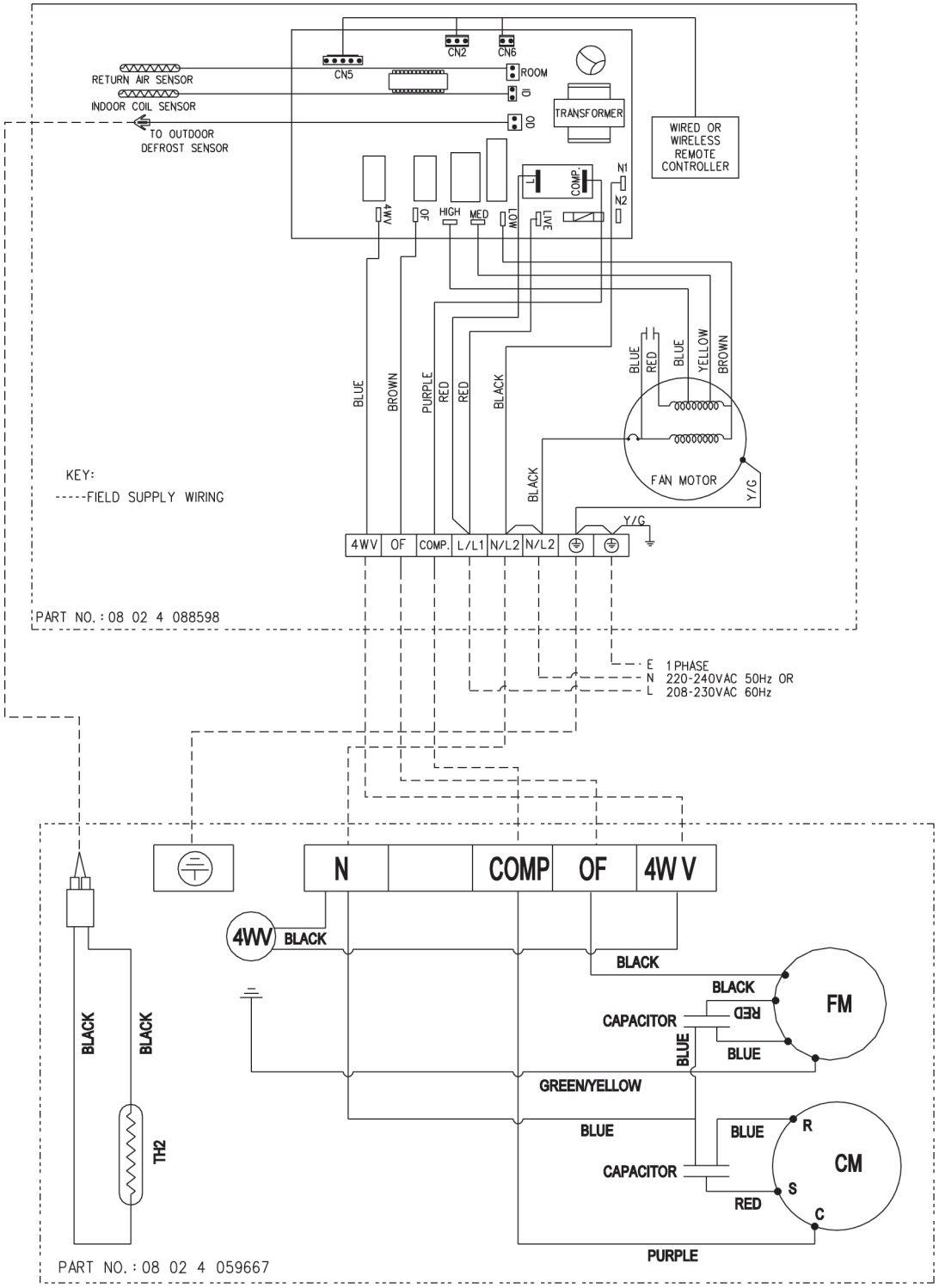

Outdoor Unit
Model : ALC 15CR

Indoor Unit
Model : ACC / A5CC 20 / 25CR

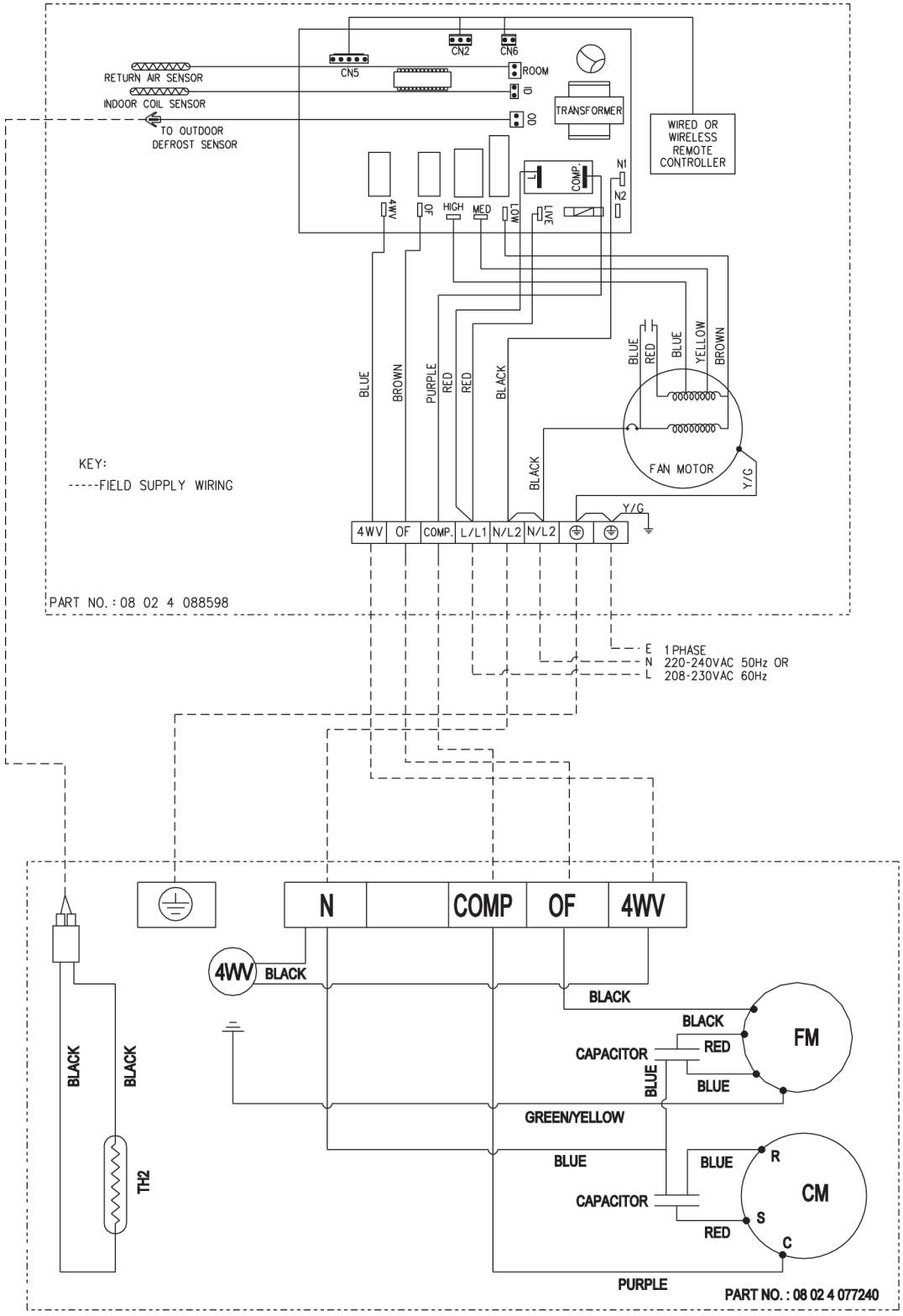

Outdoor Unit
Model : ALC / A5LC 20 / 25CR, ~~ALC 18CR~~

Indoor Unit
Model : ACC / A5CC 28CR, ACC 30CR

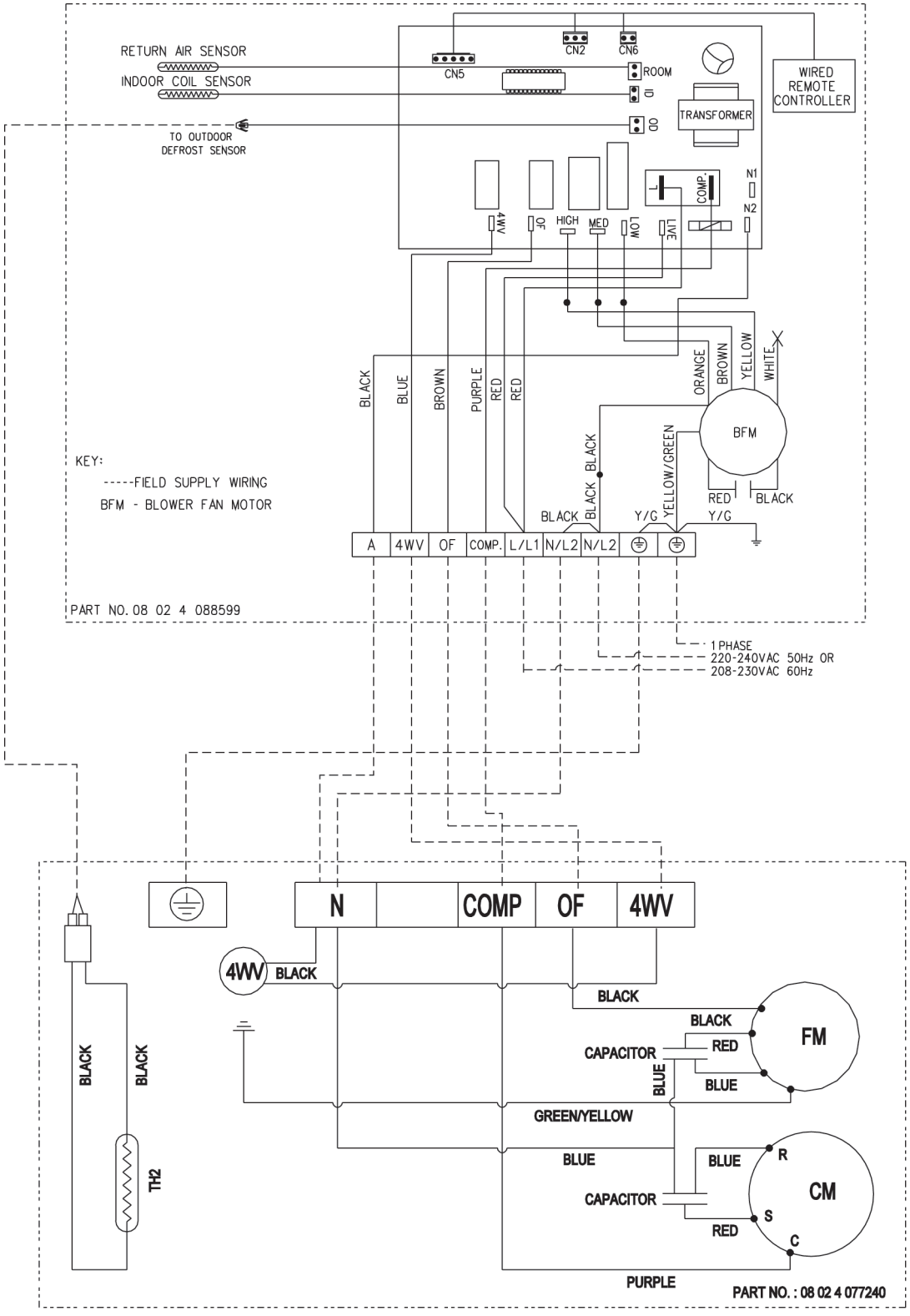

Outdoor Unit
Model : ALC / A5LC 28CR

Indoor Unit
Model : ACC 28 / 30CR

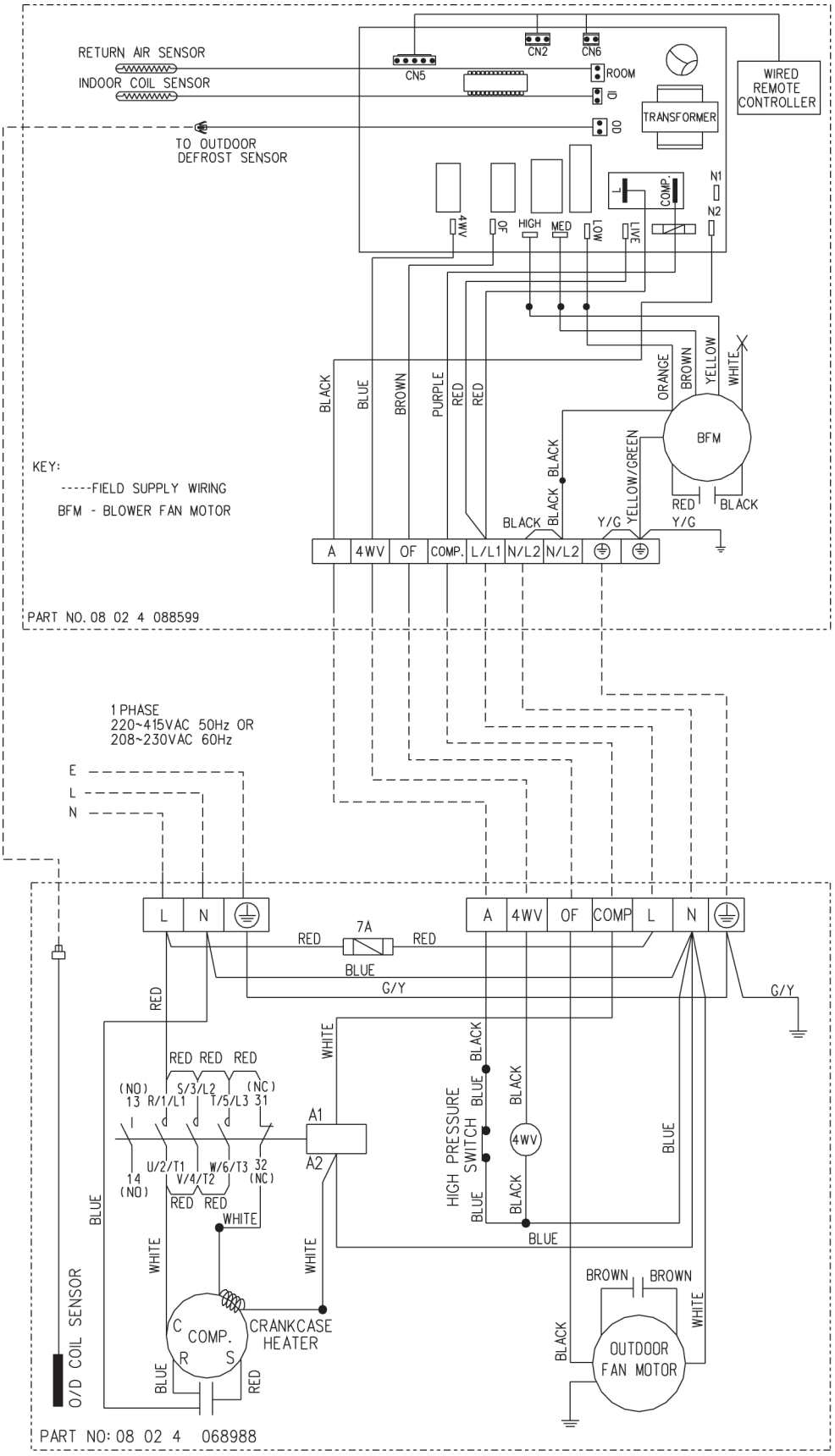

Outdoor Unit
Model : ALC ~~30CR~~ (1 Phase)
30DR

Indoor Unit
Model : ACC 28 / 30CR

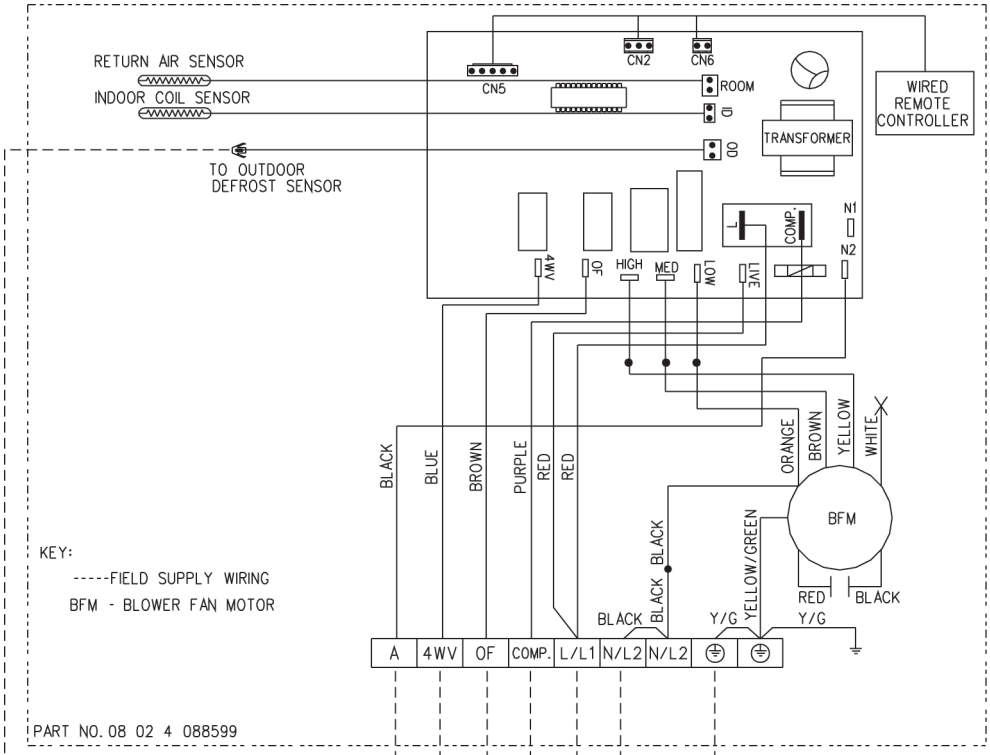

Outdoor Unit 30DR
Model : ALC ~~30CR~~ (3 Phase)

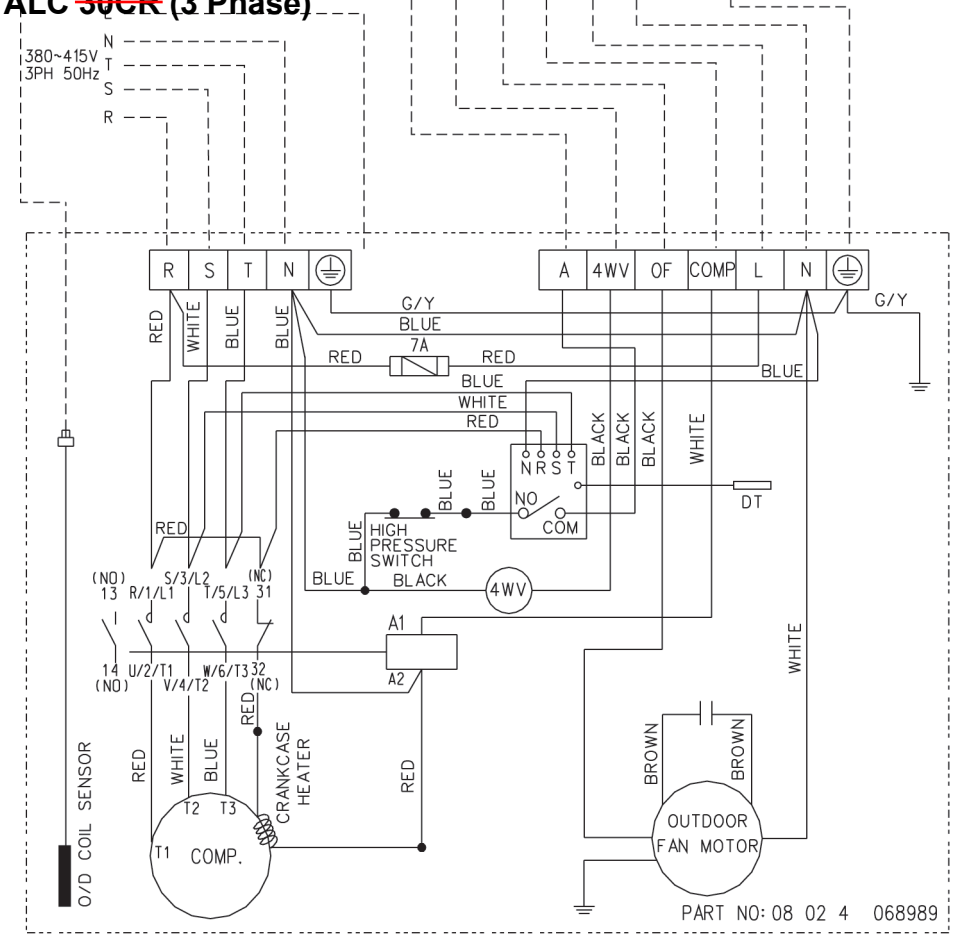

Indoor Unit
Model : ACC 38 / 40CR

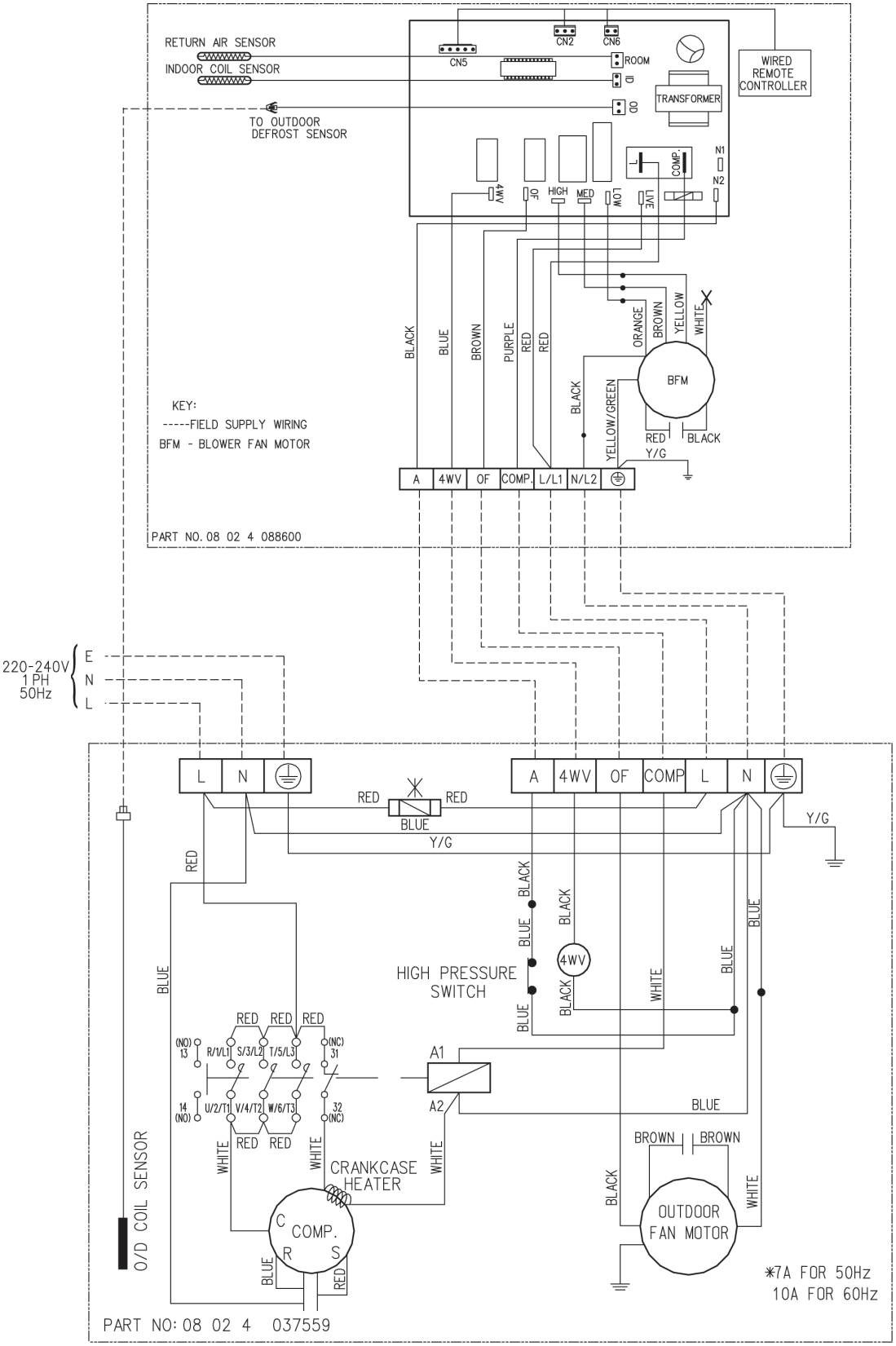

Outdoor Unit
Model : ALC ~~35 / 40CR~~ (1 Phase)
35 / 40DR

Indoor Unit
Model : A5CC 38CR

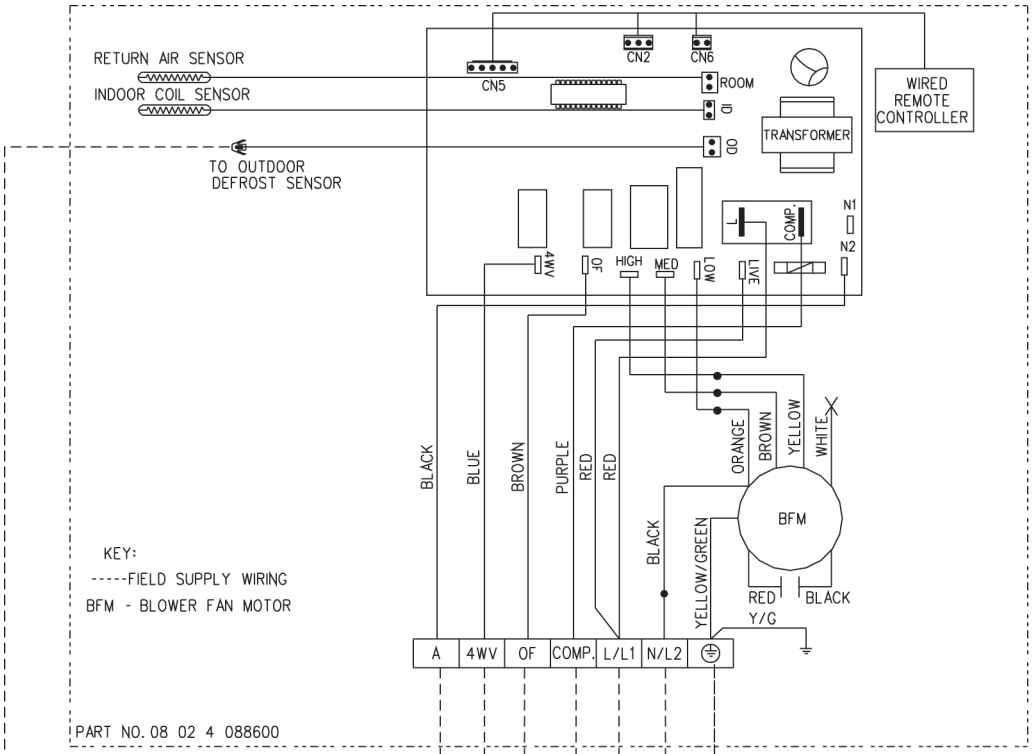

Outdoor Unit
Model : A5LC ~~35 / 40CR~~ 35 / 40DR

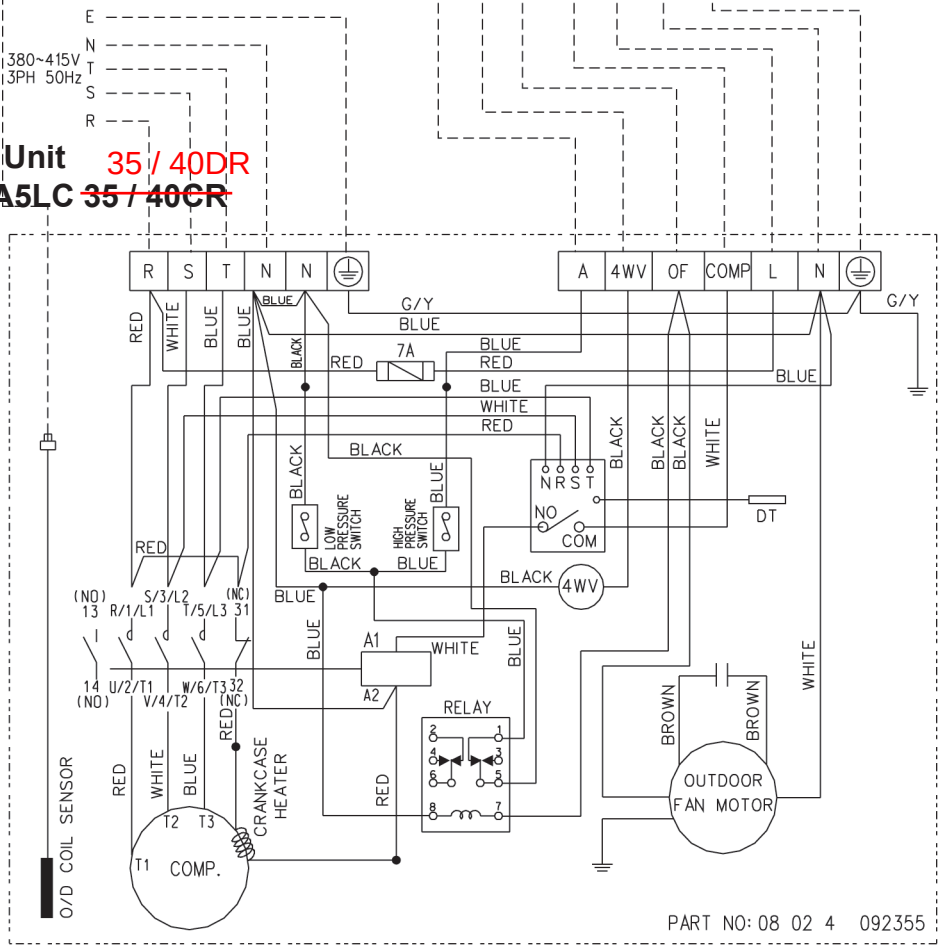

Indoor Unit
Model : ACC 38 / 40 / 50CR

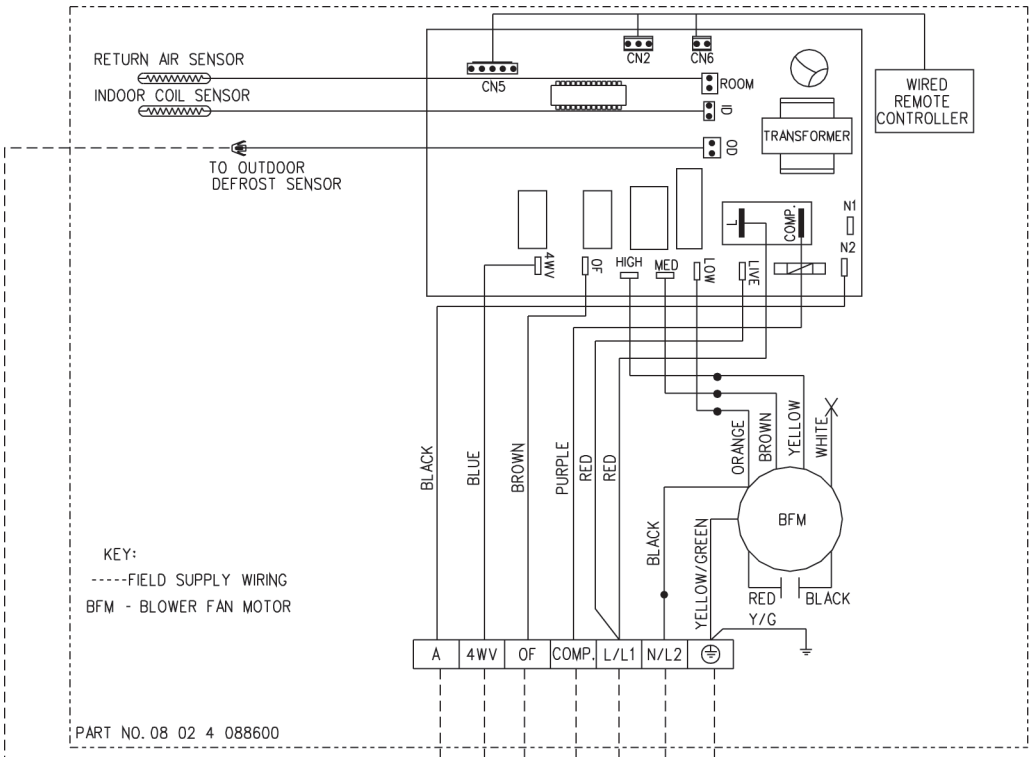

Outdoor Unit 40 / 50DR
Model : ALC ~~40 / 50CR~~ (3 Phase)

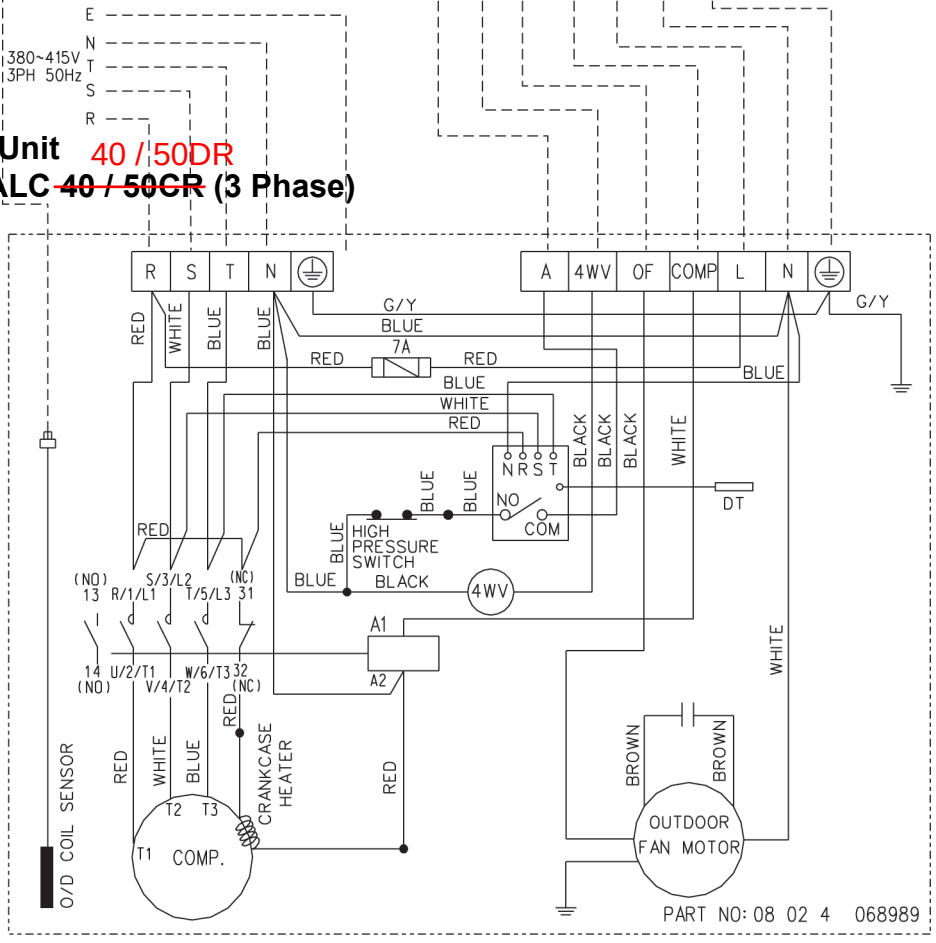

Indoor Unit
Model : A5CC 50 / 60CR

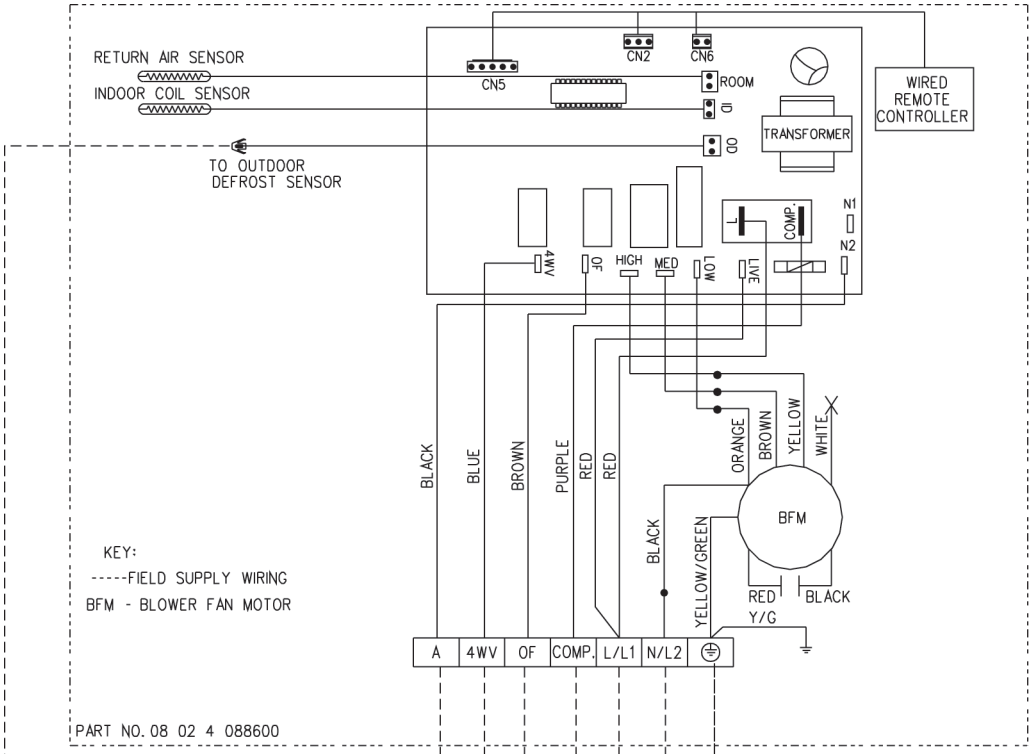

Outdoor Unit
Model : A5LC ~~50 / 61CR~~ 50 / 61DR

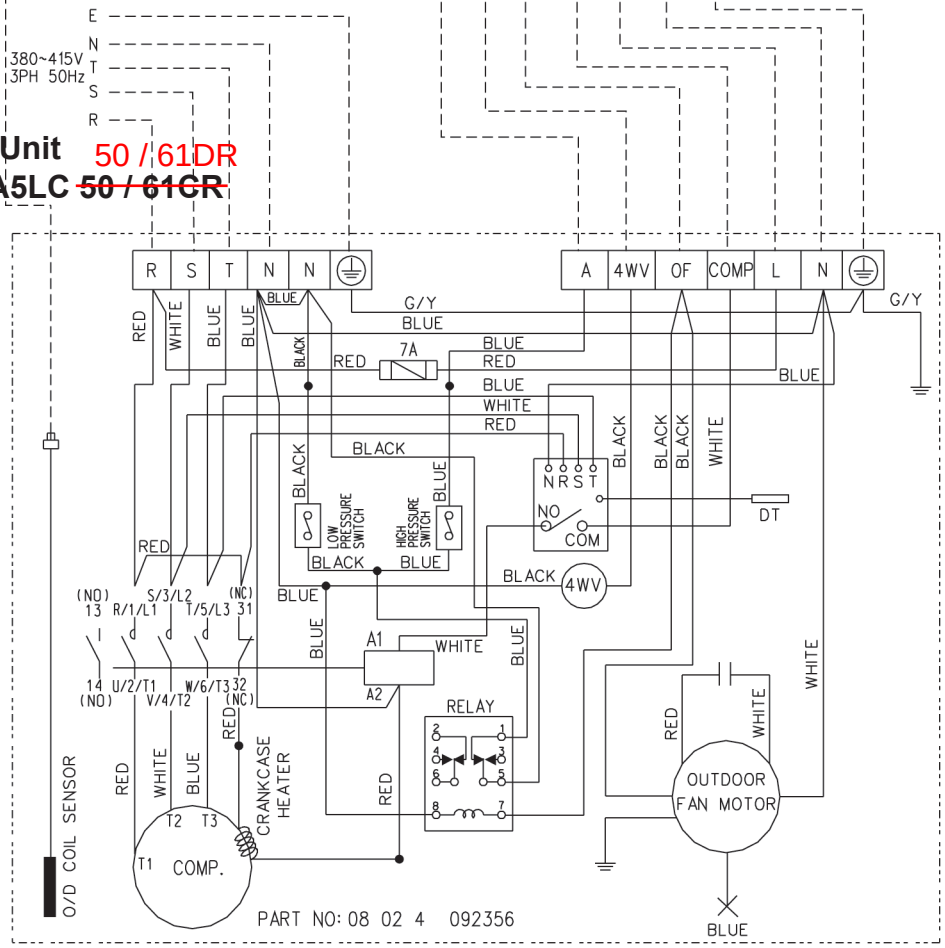

Indoor Unit
Model : ACC 60CR

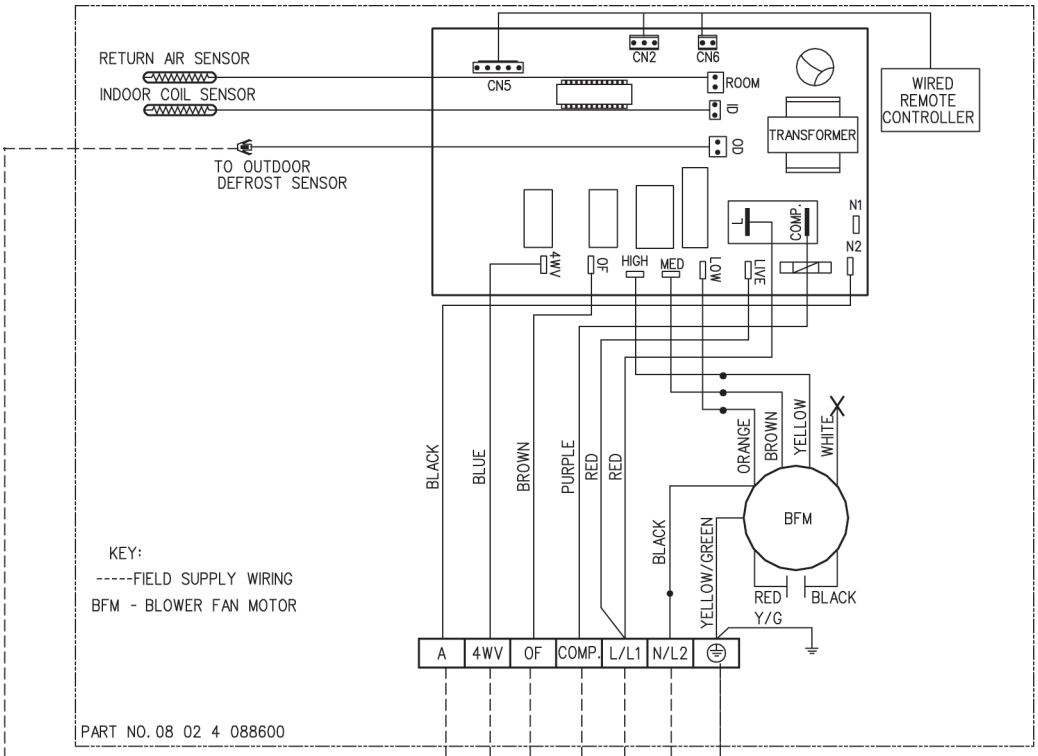

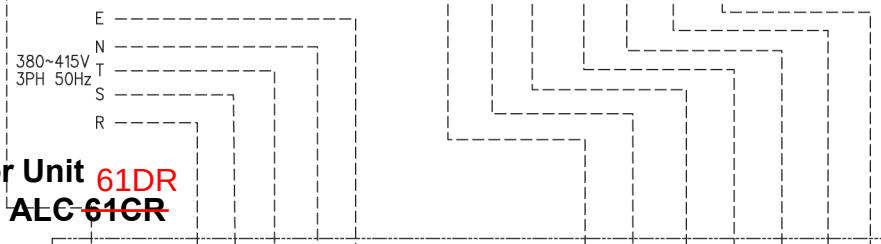

Outdoor Unit 61DR
Model : ~~ALC 61CR~~

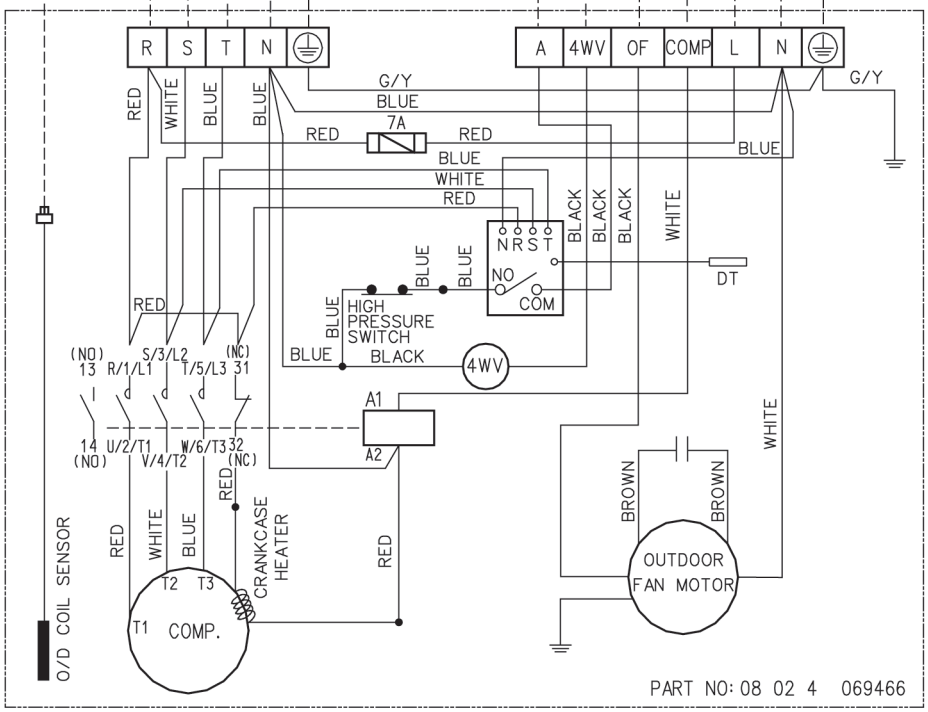

3 Phase for 2 & 2.5HP Outdoor Unit
Model : A5LC 20 / 25C (Cooling only)
3 Phase / 50 Hz / 380 ~ 415V

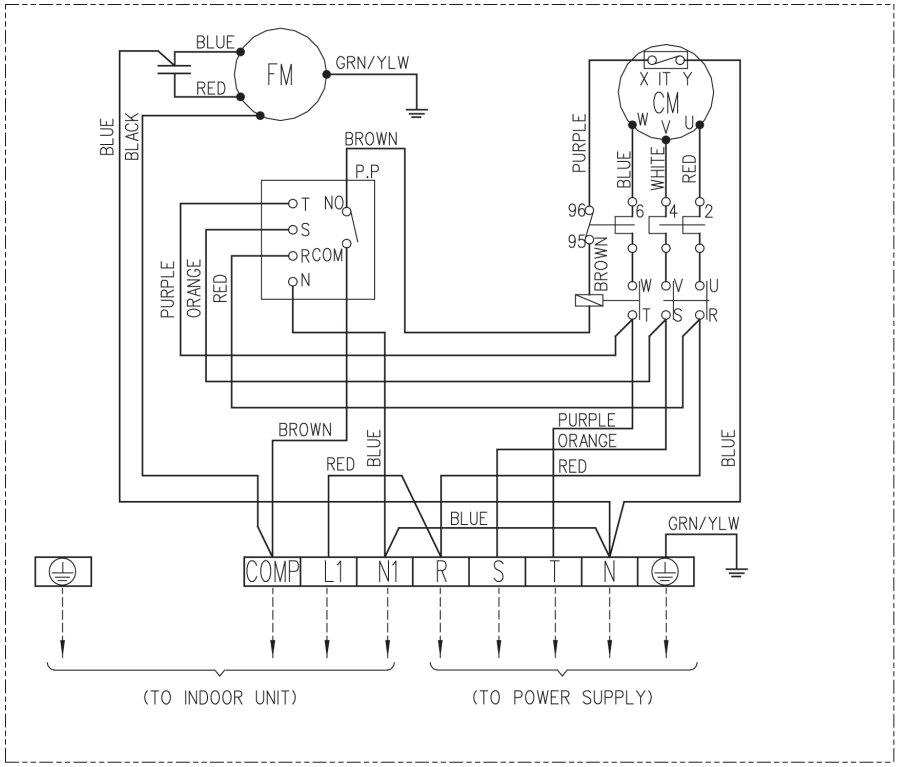

Model : A5LC 20 / 25CR (Heatpump)
3 Phase / 50 Hz / 380 ~ 415V

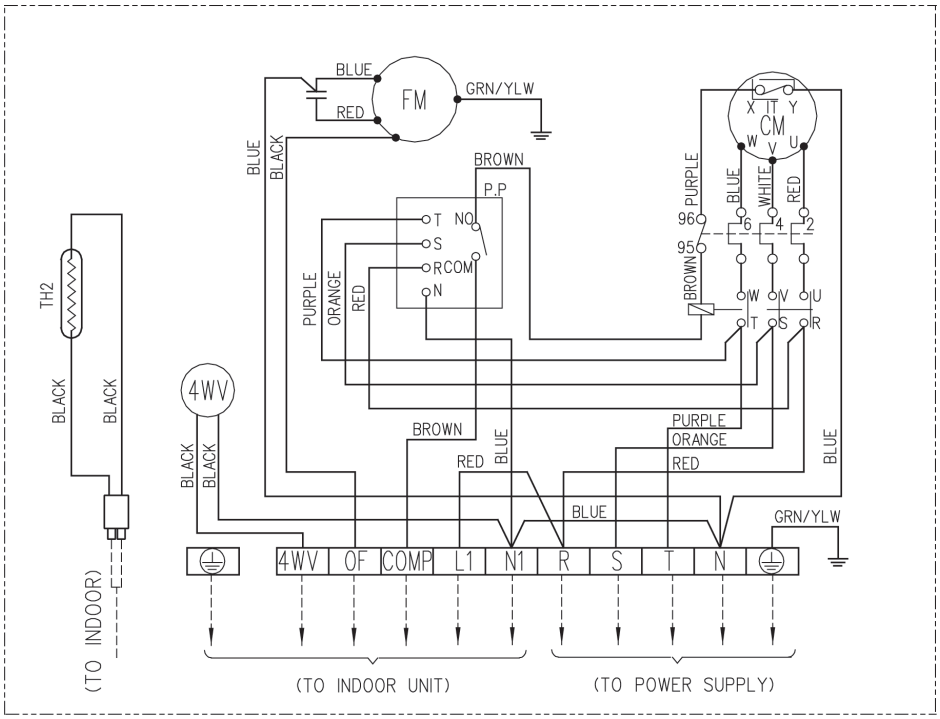

Outdoor Unit 30D
Model : ALC ~~30C~~ (Cooling only)
50Hz / 1 Phase / 220 ~ 240V

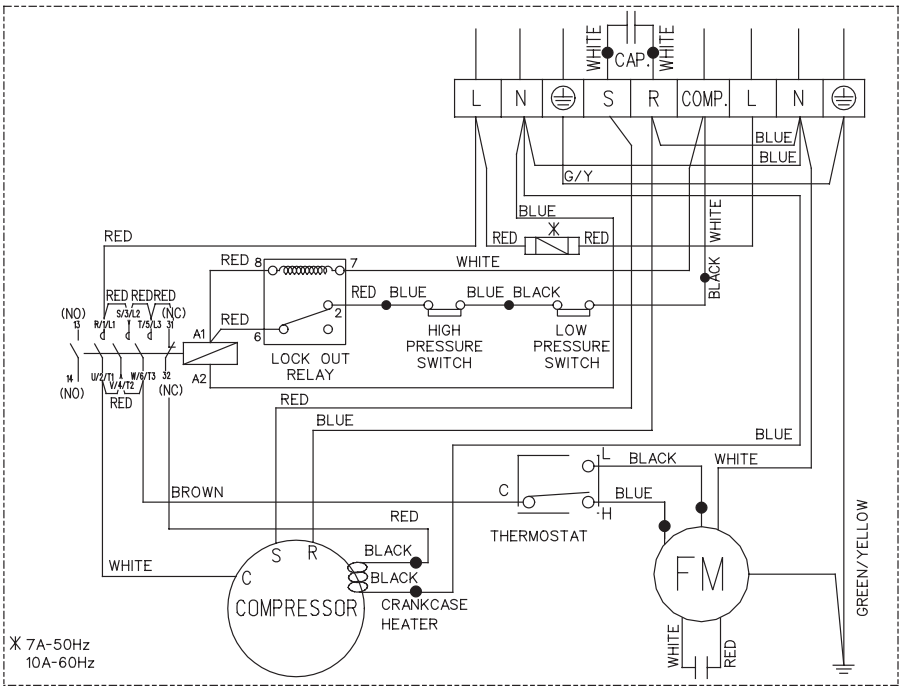

PART NO. : 08 02 4 068586 OUTDOOR UNIT

High Ambient Unit
Outdoor Unit 40 / 50D
Model : ALC ~~40 / 50C~~ (Cooling only)
50Hz / 3 Phase / 380 ~ 415V

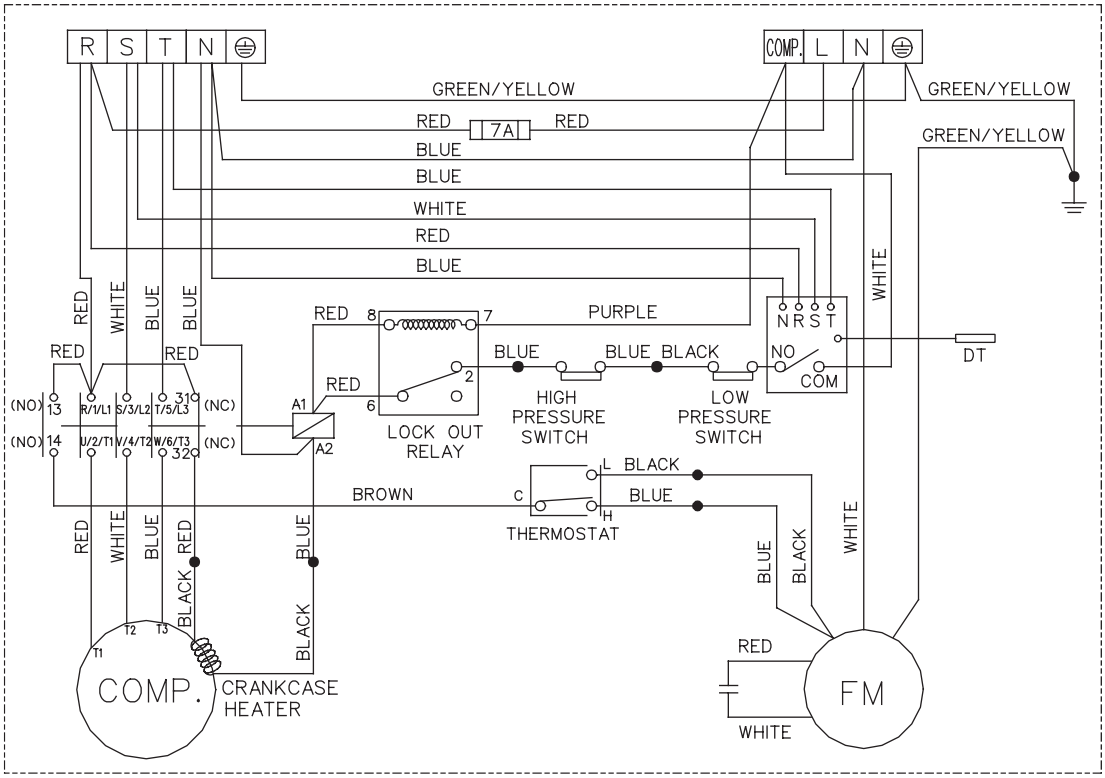

High Ambient Unit
Outdoor Unit 30DR
Model : ALC ~~30CR~~ (Heatpump)
50Hz / 1 Phase / 220 ~ 240V

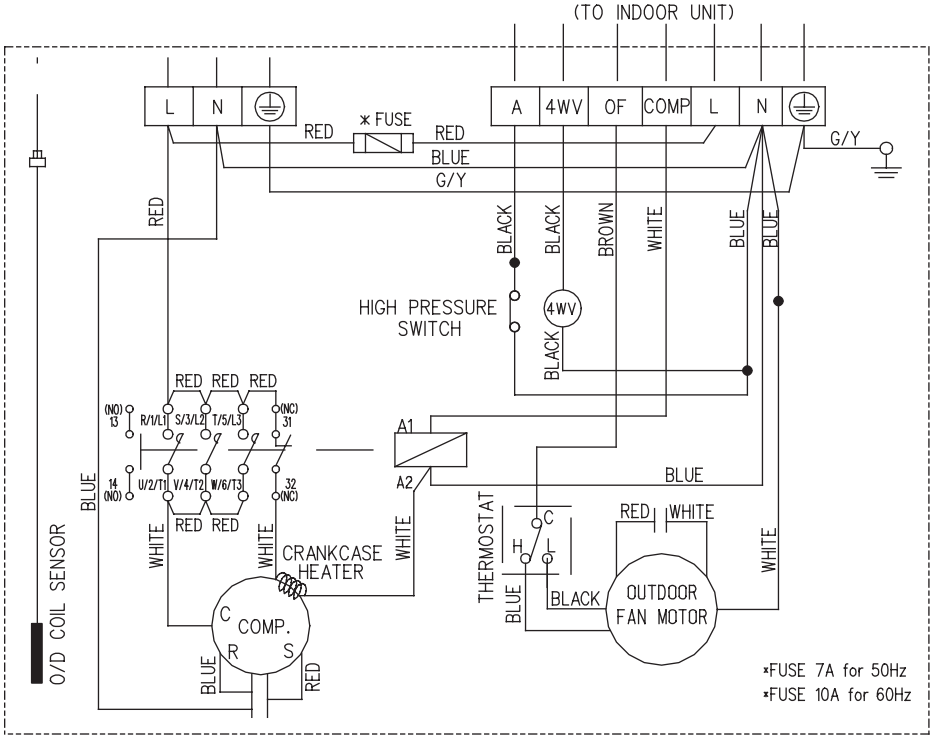

Outdoor Unit 40 / 50DR
Model : ALC ~~40 / 50CR~~ (Heatpump)
50Hz / 3 Phase / 380 ~ 415V

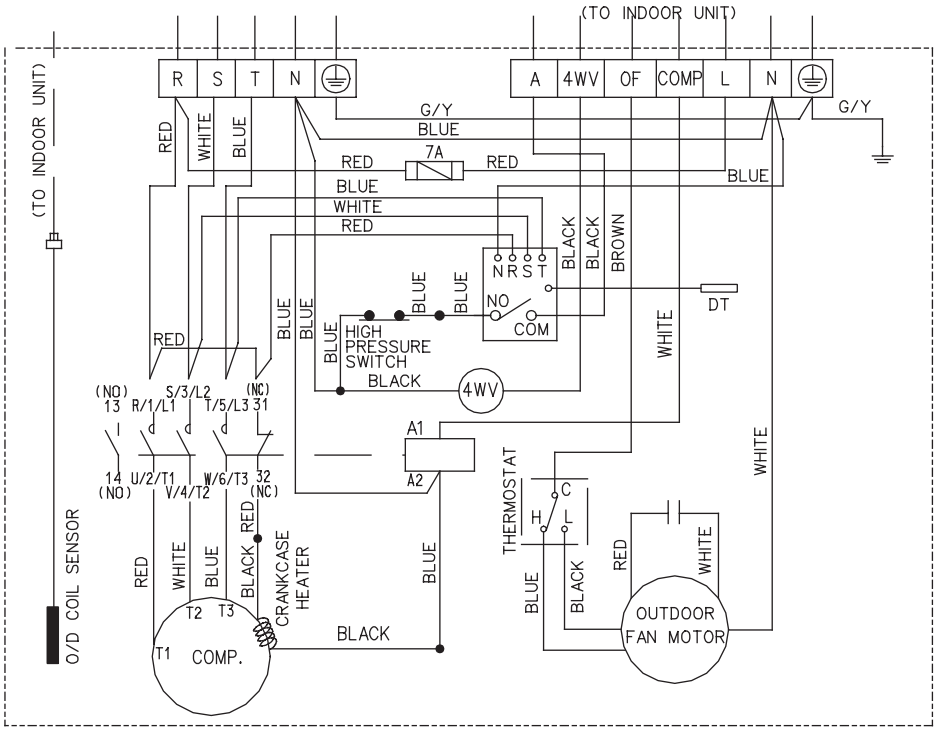

Outdoor Unit
Model : ALC 10C (Cooling only)
50Hz / 1 Phase / 220 ~ 240V

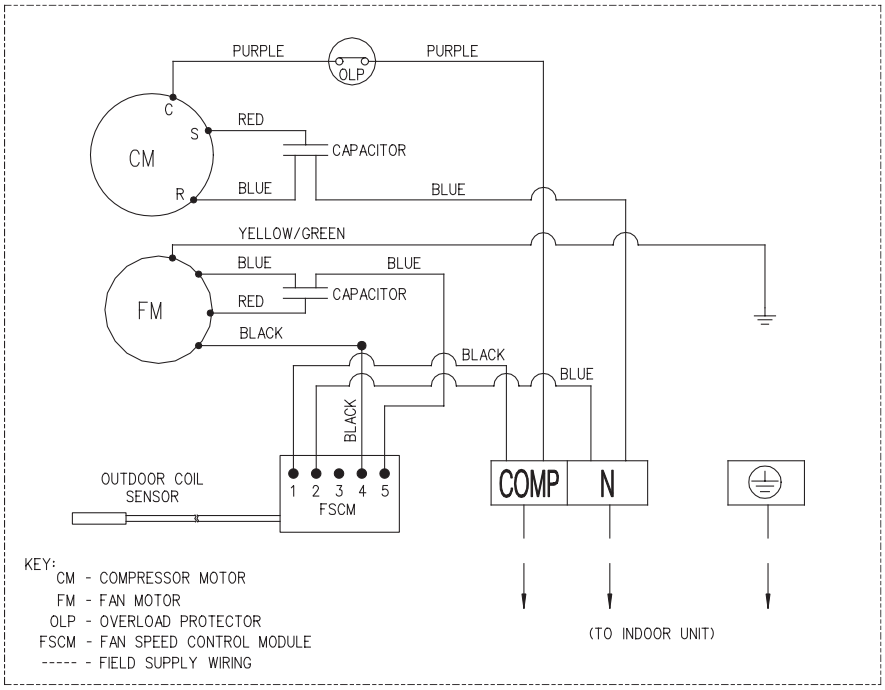

Low Ambient Unit
Outdoor Unit
Model : ALC 15C (Cooling only)
50Hz / 1 Phase / 220 ~ 240V

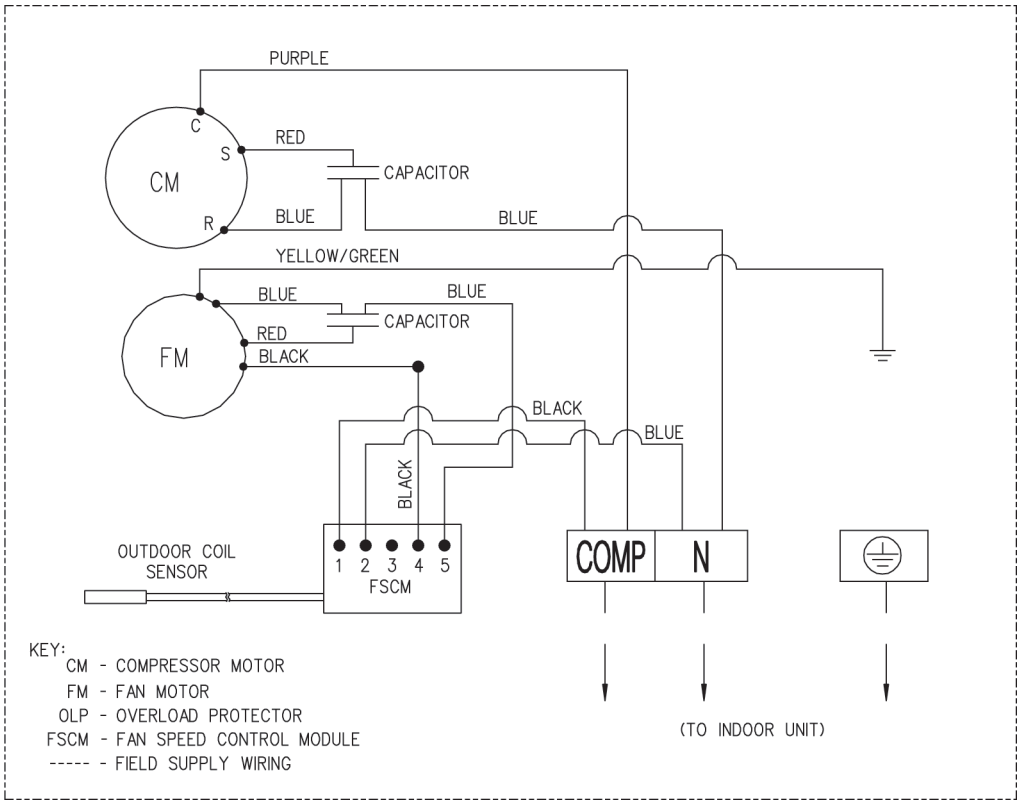

11. SERVICING AND MAINTENANCE

Warning: Disconnect from main supply before servicing the air conditioner.

The unit is designed to give long life operation with minimum maintenance required. However, it should be regularly checked and the following items should be given due attention.

Components	Maintenance Procedure	Recommended Schedule
Air filter (Indoor Unit)	1. Remove the ionizer filter before cleaning the filter. 2. Remove the dust adhering on the filter by using a vacuum cleaner or wash using water less than 40°C with a neutral cleaning detergent. 3. Rinse and dry it before fitting back the ionizer filter and set it back to unit. **4. Note : Never use petrol thinner, benzene or any other chemicals.**	At least once a month.
Indoor unit	1. Clean away dirt or dust on grille or panel by wiping with soft cloth soaked in lukewarm (or cool) water or neutral detergent solution. **2. Note : Never user petrol, thinner, benzene or other volatile chemicals, which may cause plastic surface to deform.**	At least once a month.
Condense Drain Pan & Pipe	1. Check the cleanliness and clean it if necessary. 2. Check the condensate water flow.	Every 3 months.
Indoor Fan	Check if there is any abnormal noise.	If necessary.
Indoor/ Outdoor Coil	1. Check and remove the dirt between the fins. 2. Check and remove any obstacles which hinder air flow through the indoor or outdoor.	Every month.
Power Supply	1. Check the running current and voltage for indoor and outdoor unit. 2. Check the electrical wiring and tighten the wire onto the terminal block if necessary.	Every 2 months. Every year.
Compressor	No maintenance needed if refrigerant circuit remains sealed. However, check for refrigerant leak at joint and fitting.	Every 6 months.
Compressor Oil	Oil is factory charged. Not necessary to add oil if circuit remains sealed.	No maintenance required.
Fan Motor Oil	All motors are pre-lubricated and sealed at factory.	No maintenance required.

Pre Start Up Maintenance

(After Extended Shutdown)

- Inspect thoroughly and clean indoor and outdoor units.
- Clean or replace air filters.
- Clean condensates drain line.
- Clean clogged indoor and outdoor coils.
- Check fan imbalance before operation.
- Tighten all wiring connections and panels.
- Check for refrigerant leakage.

For ALC Outdoor Models

The design of the ALC outdoor series allows servicing to be carried out easily. The removal of the top, front and side panels makes almost every part accessible.

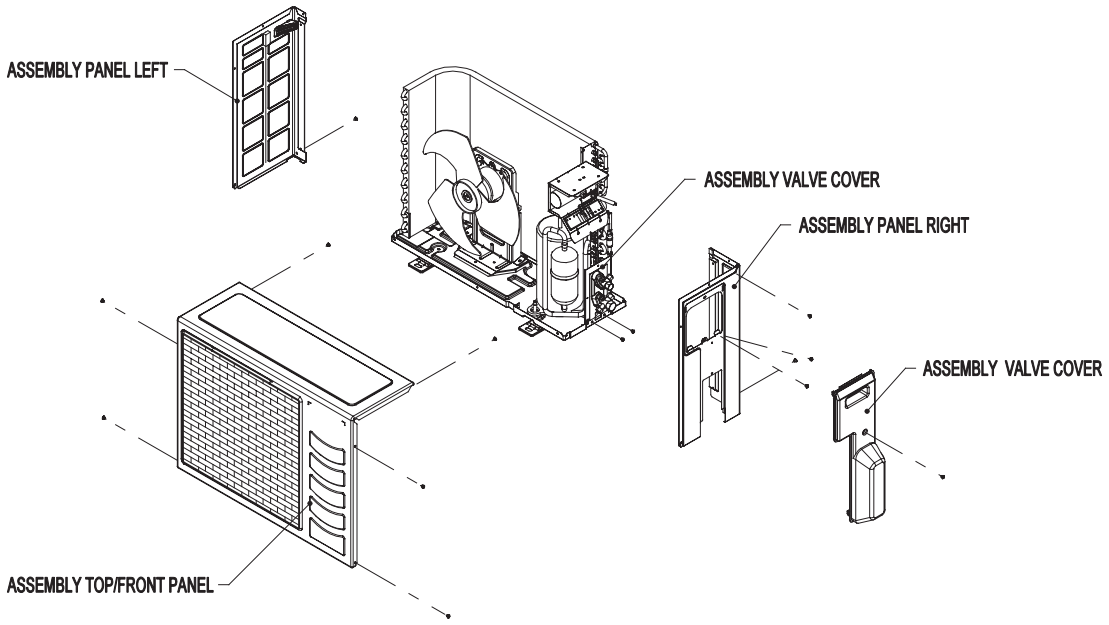

Under normal circumstances, these outdoor units only require a check and cleaning of air intake coil surface once every 3 months. However, if a unit is installed in areas subjected to much oil mist and dust, the coils must be regularly cleaned by qualified Air Conditioner Service Technicians to ensure sufficient heat exchange and proper operation. Otherwise, the systems life span may be shortened.

CAUTION!

Do not charge **OXYGEN, ACETYLENE OR OTHER FLAMMABLE** and poisonous gases into the unit when performing a leakage test or an air tight test. These gases could cause severe explosion and damage if expose to high temperature and pressure. It is recommended that only nitrogen or refrigerant be charged when performing the leakage or airtight test.

12. TROUBLESHOOTING

When a malfunction of the air conditioner unit is detected, immediately switch off the main power supply before proceeding with the following troubleshooting procedures.
The following are common fault conditions and simple troubleshooting tips. If any other fault conditions which are not listed occur, contact your nearest local dealer. DO NOT attempt to troubleshoot the unit by yourself.

No	Fault conditions	Possible causes / corrective actions
1	The air conditioner unit will not resume after power failure.	• The auto restart function is not functioning. Please turn on the unit with the wireless / wired controller.
2	The compressor does not operate 3 minutes after the air conditioner unit is started.	• Protection against frequent starting. • Wait for 3 or 4 minutes for the compressor to start operating by it self.
3	The airflow is too slow or room cannot be cooled sufficiently.	• The air filter is dirty. • The doors and windows are opened. • The air suction and discharge of both indoor and outdoor units are clogged or blocked. • The regulated temperature or temperature setting is not low enough.
4	Discharge airflow has bad odor.	• Cigarettes, smoke particles, perfume and others, which might have adhered onto the coil, may cause odor. • Contact your nearest dealer.
5	Condensation on the front air grille of the indoor unit.	• This is caused by air humidity after an extended period of operation. • The set temperature is too low. Increase the temperature setting and operate the unit at high fan speed.
6	Water flowing out from the air conditioner.	• Switch off the unit and contact your nearest dealer. This might be due to tilted installation.
7	Hissing airflow sound from the air conditioner unit during operation.	• Liquid refrigerant flowing into the evaporator coil.
8	The wireless controller display is dim.	• The batteries are discharged. • The batteries are not correctly inserted. • The assembly is not good.
9	Compressor operates continuously.	• Dirty air filter. Clean the air filter. • Temperature setting too low (cooling). Use higher temperature setting. • Temperature setting too high (heating), Use lower temperature setting.
10	No cool air comes out during cooling cycle, or no hot air comes out during heating cycle.	• Temperature setting too high (cooling). Use lower temperature setting. • Temperature setting too low (heating). Use higher temperature setting.
11	On heating cycle, warm air does not come out.	• Unit is in defrost mode. Heating operation will resume after defrost cycle ends.

Diagnostic Guideliens

By means of pressure readings:

Data / Circuit	Pressure					Probable cause
	Too low	A little low	Normal	A little high	Too high	
High side **Low side**					• •	1. Overcharged with refrigerant. 2. Non-condensable gases in refrigerant circuit (e.g. air) 3. Obstructed air-intake / discharge. 4. Hot air short circuiting in outdoor unit.
High side **Low side**	•				•	1. Poor compression / no compression (compressor defective) 2. Reversing valve leaking.
High side **Low side**	•	•				**1. Undercharged with refrigerant.** 2. Refrigerant leakage. 3. Air filter clogged / dirty (indoor unit). 4. Indoor fan locked / seized. 5. Defective defrost control, outdoor coil freeze up (heating). 6. Outdoor fan locked / seized (heating).
High side **Low side**				•	•	1. Outdoor fan blocked (cooling). 2. Outdoor coil dirty (cooling). 3. Indoor fan locked / seized (heating). 4. Indoor air filter clogged / dirty (heating). 5. Non-condensable gases in refrigerant circuit (e.g. air)
High side **Low side**				•	•	1. Air intake temperature of indoor unit too high.

BY MEANS OF DIAGNOSTIC FLOW CHART :

Generally, there are two kinds of problems, i.e. starting failure and insufficient cooling/heating. “Starting failure” is caused by electrical defect while improper application or defects in refrigerant circuit causes “Insufficient cooling / heating”.

i) Diagnosis of Electric Circuit

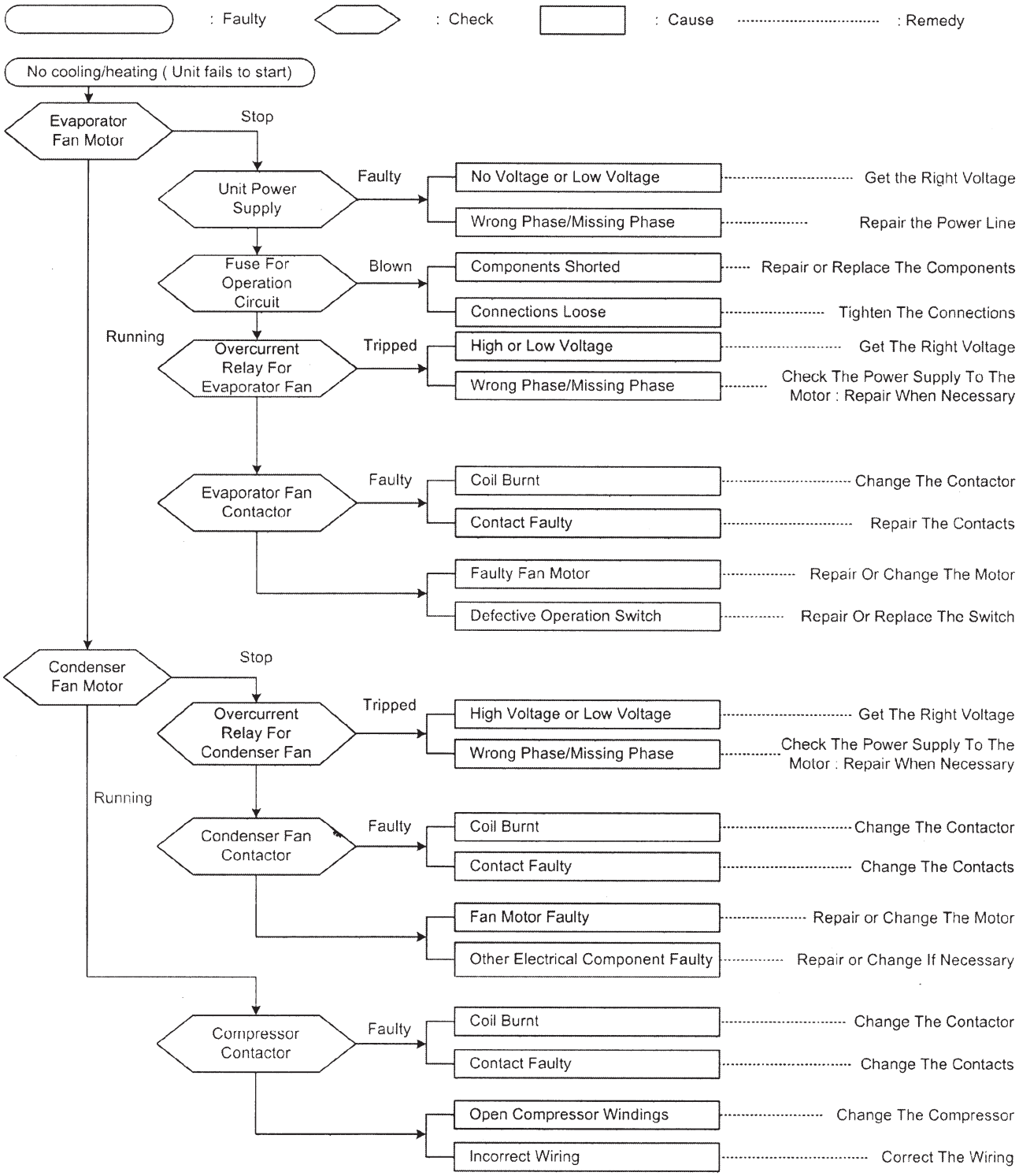

The most common causes of air conditioner failure to “start” are :

a) Voltage not within ±10% of rated voltage.
b) Power supply interrupted.
c) Improper control settings.
d) Air conditioner is disconnected from main power source.
e) Fuse blown or circuit breaker off.

ii) Diagnosis of Refrigerant Circuit / Application

There might be some causes where the unit starts running but does not perform satisfactorily, i.e. insufficient cooling. Judgement could be made by measuring temperature difference of indoor unit's intake and discharge air as well as running current.

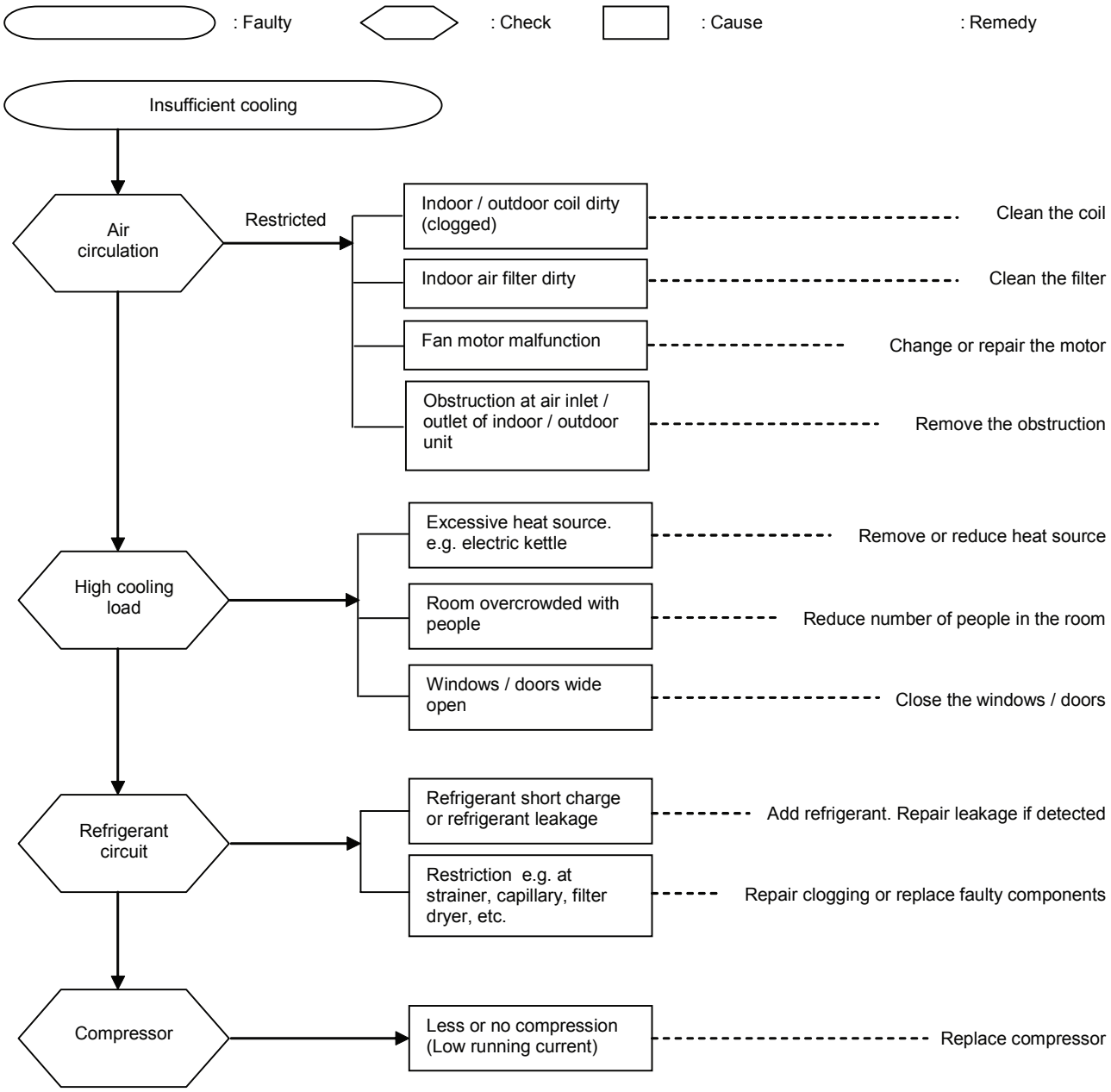

Satisfactory operation with temperature difference of air intake & discharge of indoor unit 8°C to 13°C. *
(* value is for reference only)

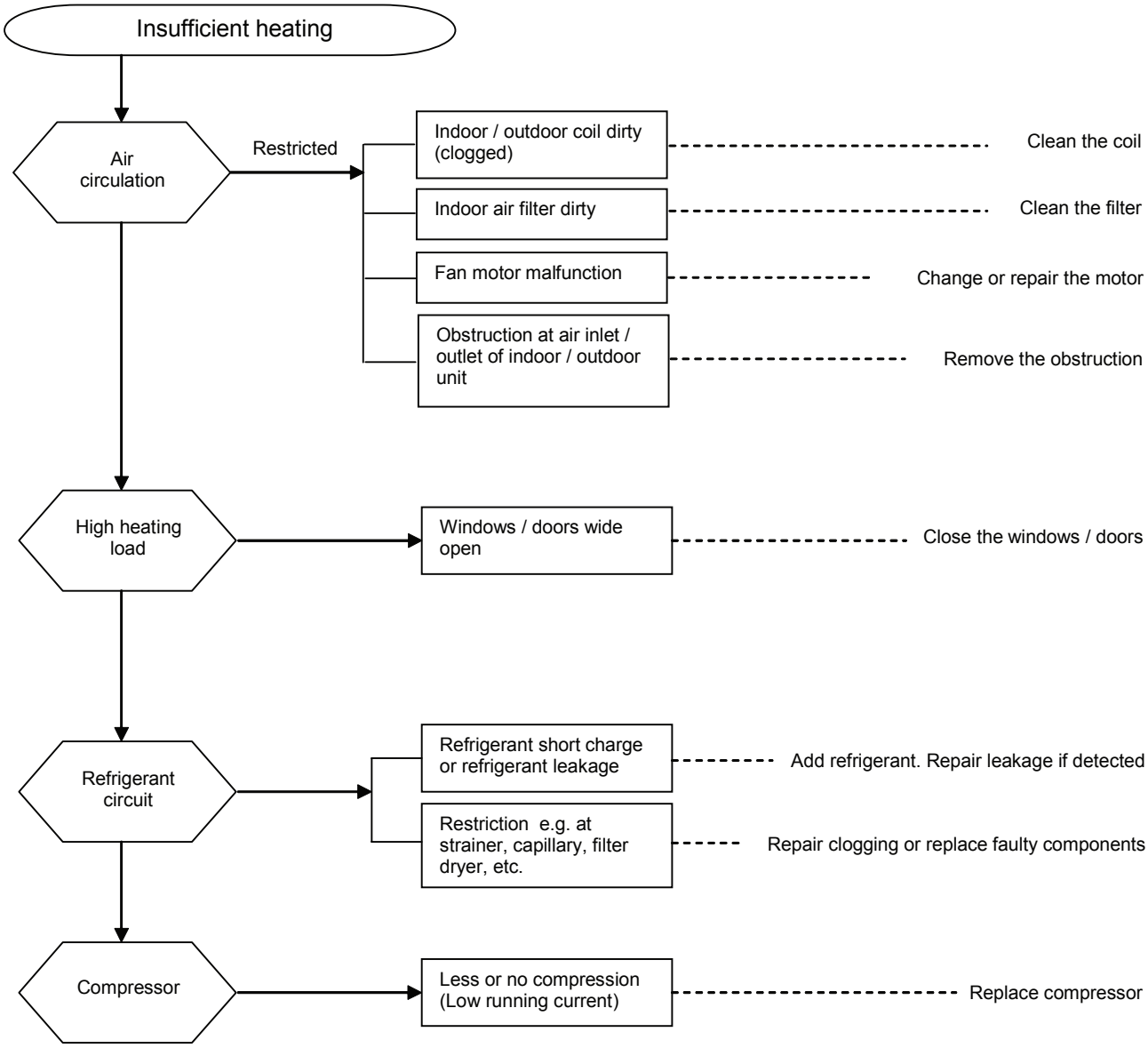

Satisfactory operation with temperature difference of air intake & discharge of indoor unit 14°C to 20°C. *
(* value is for reference only)

13. EXPLODED VIEW AND PARTS LIST

Model: ACC/A5CC 10C/CR

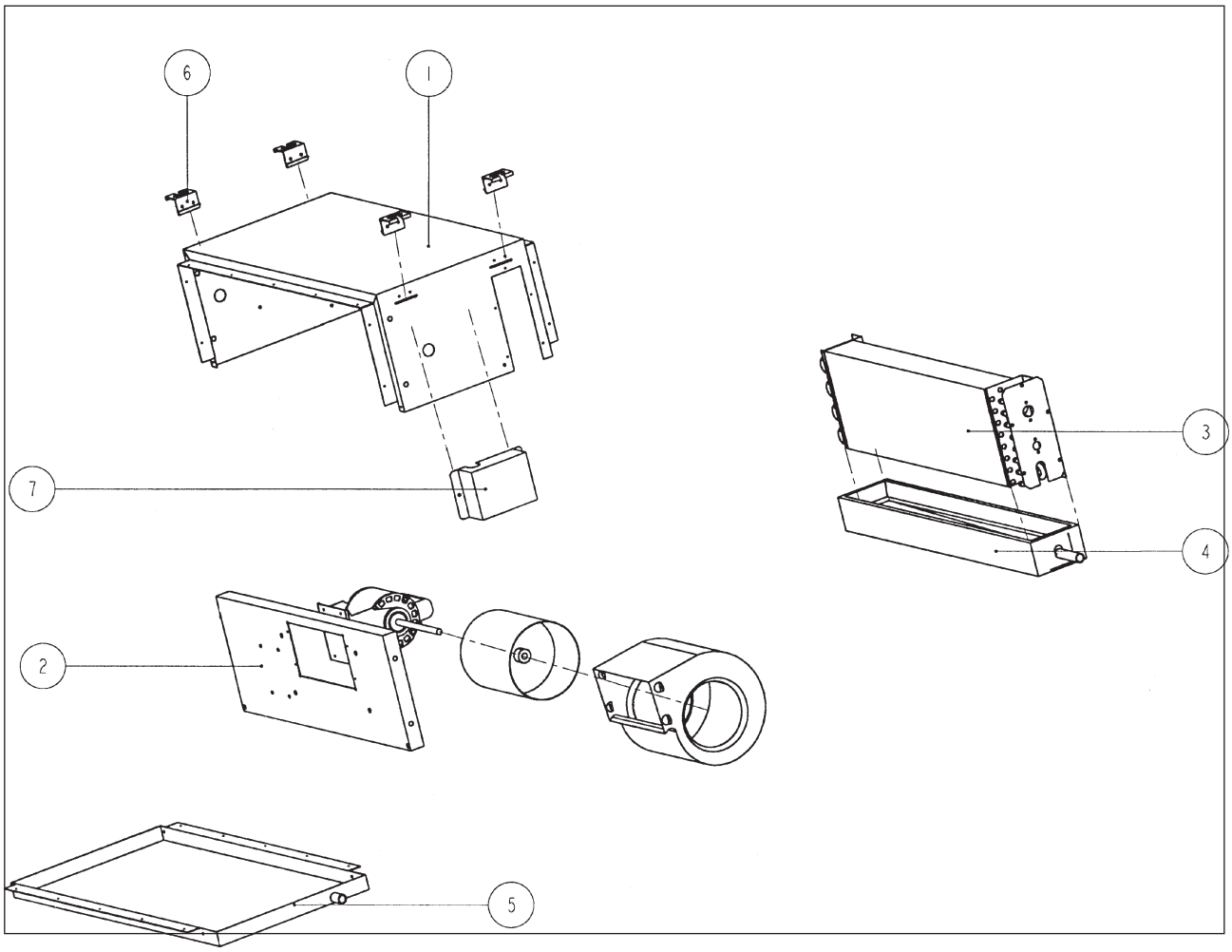

No	Description
1	Cabinet
2	Fan Deck
3	Assy., Coil
4	Primary Drain Pan
5	Secondary Drain Pan
6	Hanger
7	-

Parts Not in Diagram	
1	Assy., Wheel & Housing - Left
2	Fan Motor
3	Air Filter
4	Assy., Drain Pipe Joint
5	L2 Control Module
6	Handset
	SLM Cooling Only
	SLM Heat Pump

ALL SPECIFICATIONS ARE SUBJECT TO CHANGE BY THE MANUFACTURER WITHOUT PRIOR NOTICE

Model: ACC/A5CC 15/20/25C/CR

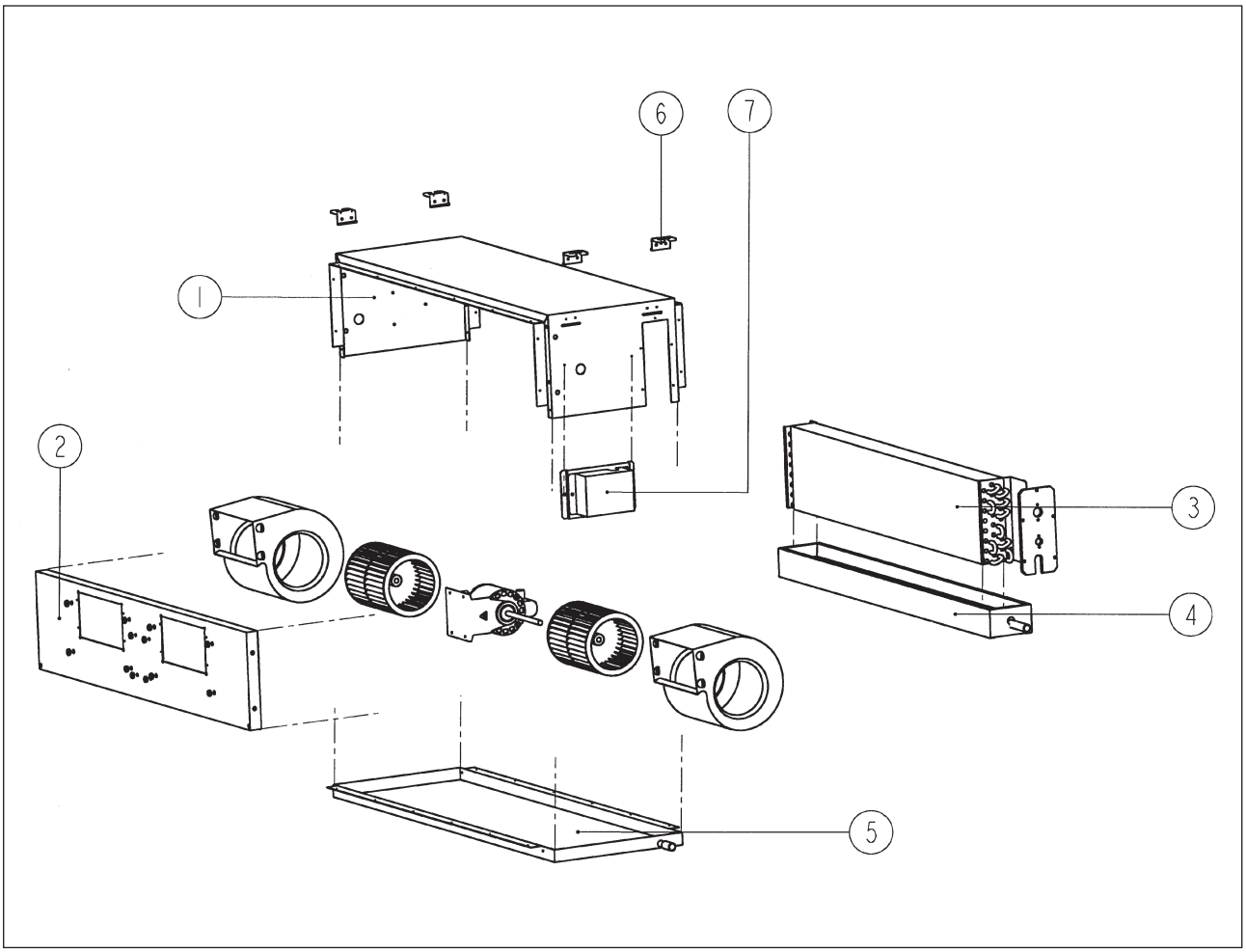

No	Description
1	Cabinet
2	Fan Deck
3	Assy., Coil
4	Primary Drain Pan
5	Secondary Drain Pan
6	Hanger
7	-

Parts Not in Diagram	
1	Assy., Wheel & Housing - Left
2	Assy., Wheel & Housing - Right
3	Fan Motor
4	Air Filter
5	Assy., Drain Pipe Joint
6	L2 Control Module
7	Handset
	SLM Cooling Only
	SLM Heat Pump

ALL SPECIFICATIONS ARE SUBJECT TO CHANGE BY THE MANUFACTURER WITHOUT PRIOR NOTICE

Model: ACC/A5CC 28C/CR

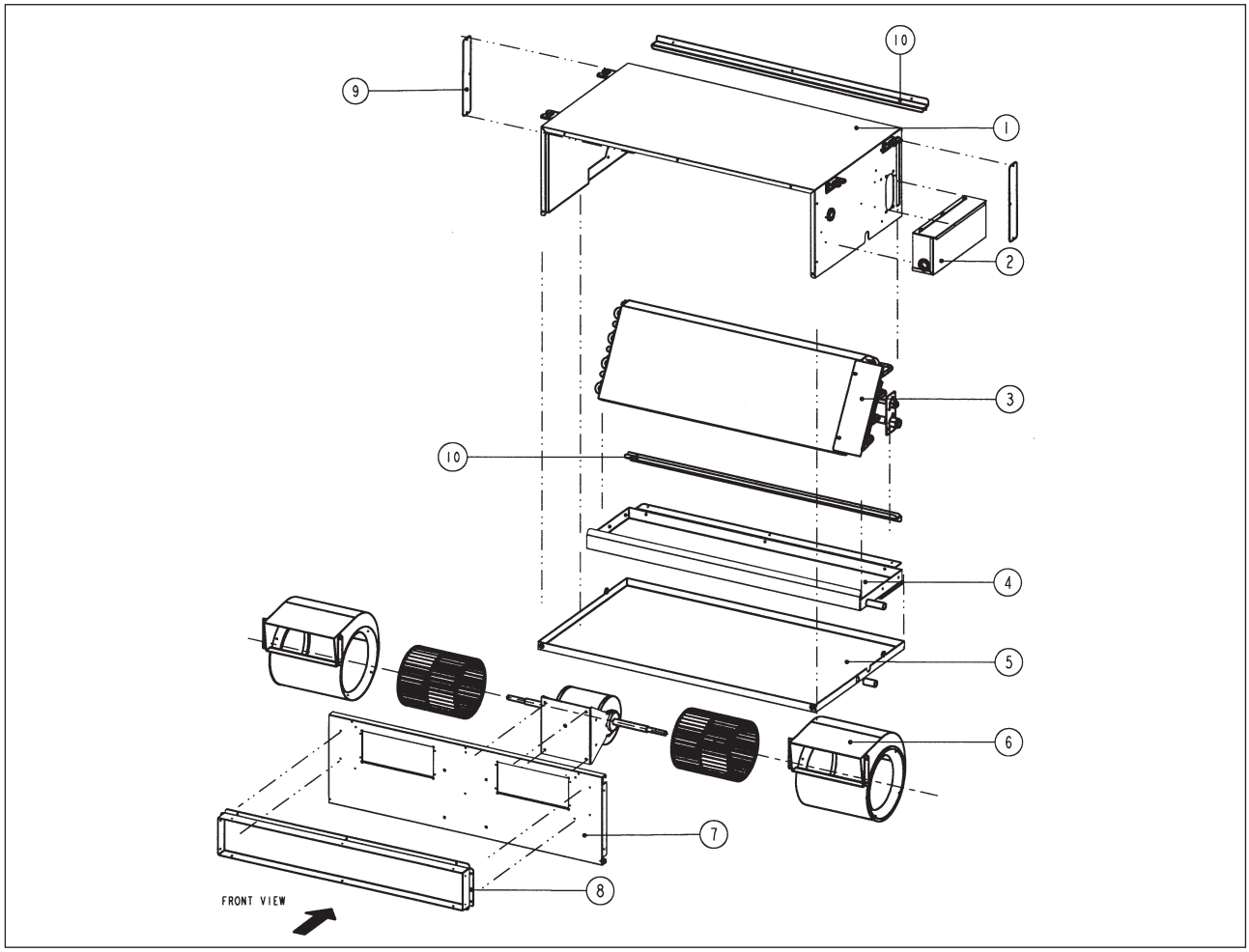

No	Description
1	Assy., Top Panel
2	-
3	Assy., Coil
4	Assy., Drain Pan (Small)
5	Assy., Drain Pan (Big)
6	Assy., Wheel & Housing - Left
	Assy., Wheel & Housing - Right
7	Panel, Blower
8	Flange, Blower
9	Filter Rail, Cover
10	Filter Rail

Parts Not in Diagram	
	Hanger
	Fan Motor
	Bracket, Motor
	Support, Bracket Motor
	Air Filter
	L2 Control Module
	Handset
	SLM cooling Only
	SLM Heat Pump

ALL SPECIFICATIONS ARE SUBJECT TO CHANGE BY THE MANUFACTURER WITHOUT PRIOR NOTICE

Model: ACC 30C/CR

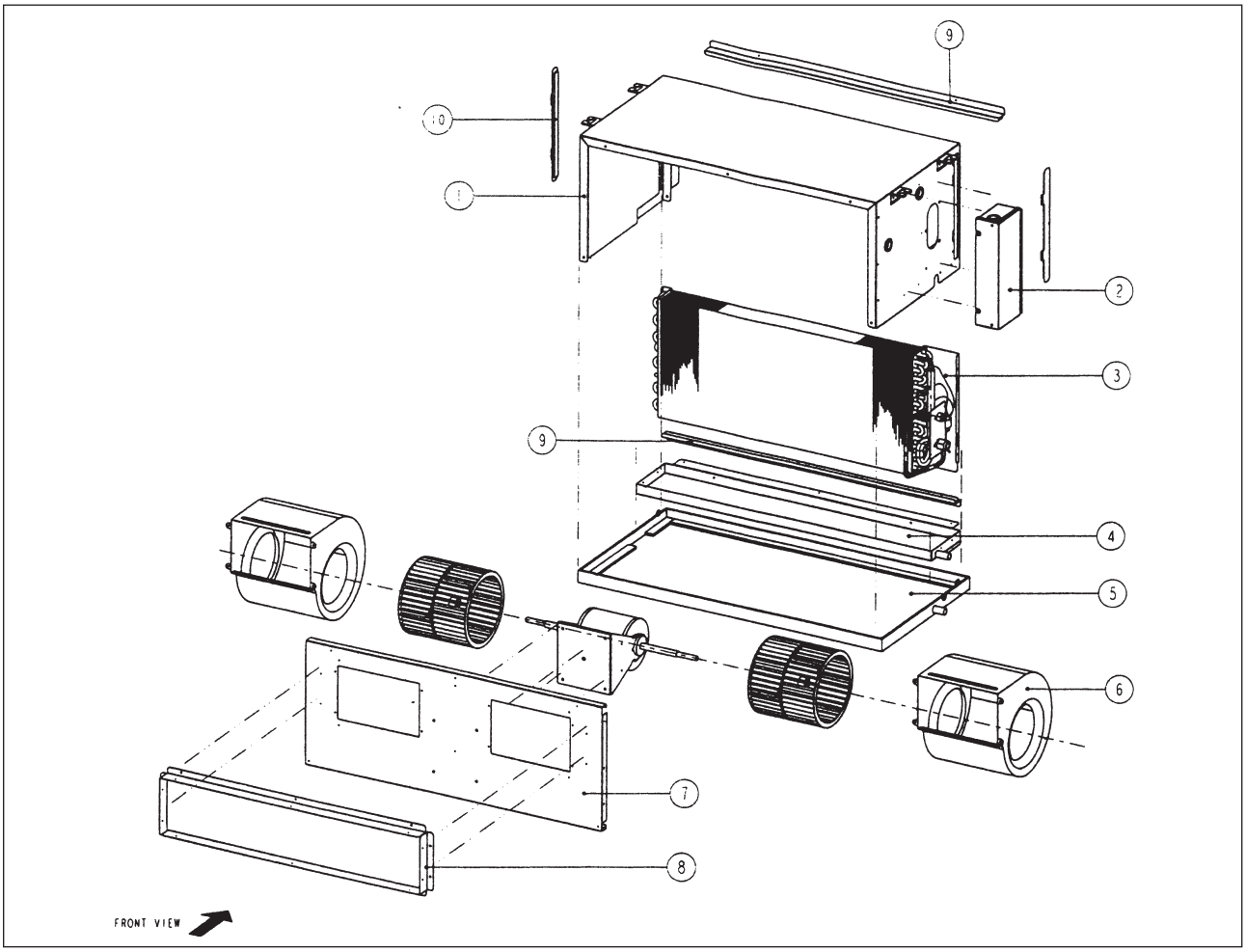

No	Description
1	Assy., Top Panel
2	-
3	Assy., Coil
4	Assy., Drain Pan (Small)
5	Assy., Drain Pan (Big)
6	Assy., Wheel & Housing - Left
	Assy., Wheel & Housing - Right
7	Panel, Blower
8	Flange, Blower
9	Filter Rail, Cover
10	Filter Rail

Parts Not in Diagram	
	Hanger
	Fan Motor
	Bracket, Motor
	Support, Bracket Motor
	Air Filter
	L2 Control Module
	Handset
	SLM cooling Only
	SLM Heat Pump

ALL SPECIFICATIONS ARE SUBJECT TO CHANGE BY THE MANUFACTURER WITHOUT PRIOR NOTICE

Model: ACC/A5CC 38C/CR

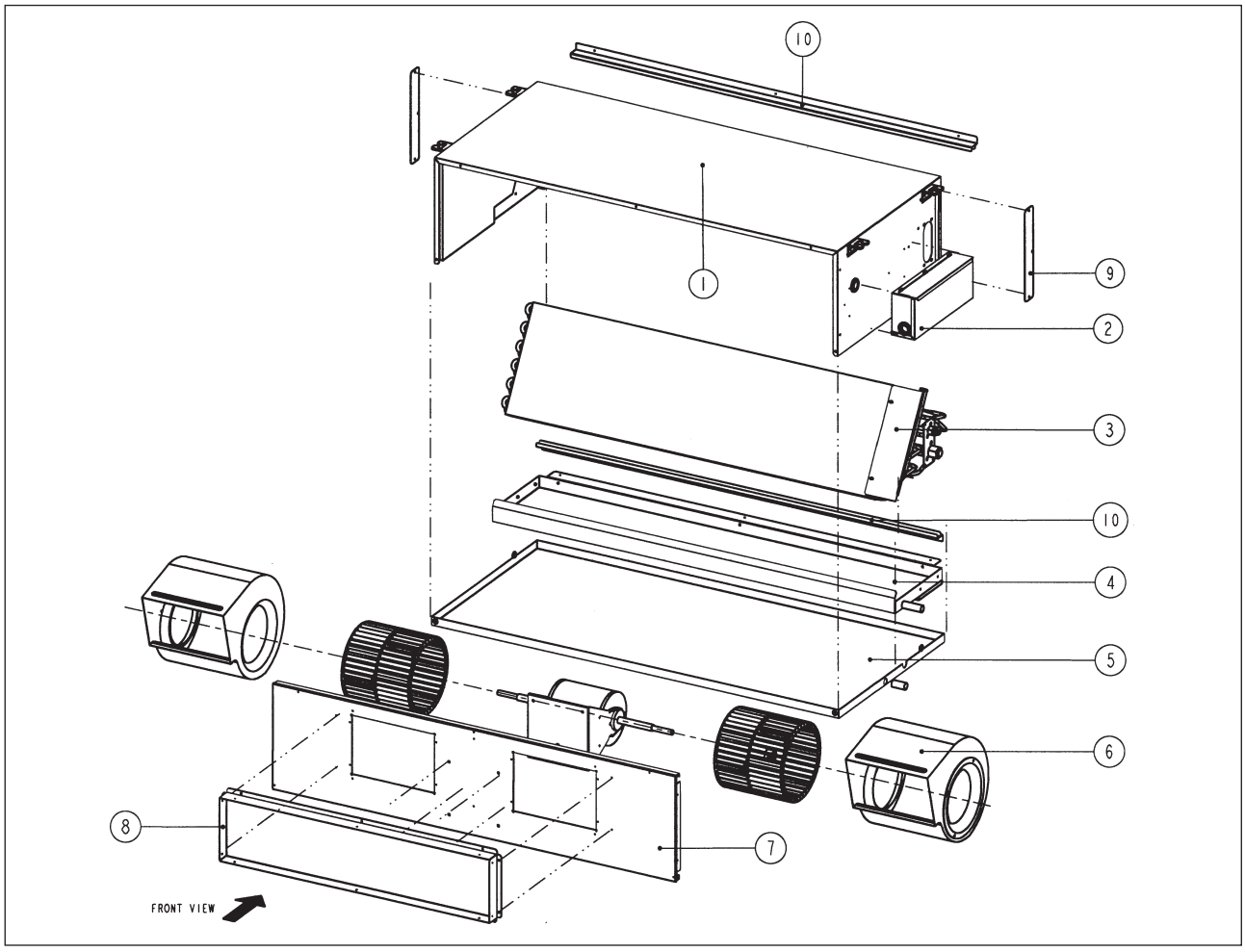

No	Description
1	Assy., Top Panel
2	-
3	Assy., Coil
4	Assy., Drain Pan (Small)
5	Assy., Drain Pan (Big)
6	Assy., Wheel & Housing - Left
	Assy., Wheel & Housing - Right
7	Panel, Blower
8	Flange, Blower
9	Filter Rail, Cover
10	Filter Rail

Parts Not in Diagram	
	Hanger
	Fan Motor
	Bracket, Motor
	Support, Bracket Motor
	Air Filter
	L2 Control Module
	Handset
	SLM cooling Only
	SLM Heat Pump

ALL SPECIFICATIONS ARE SUBJECT TO CHANGE BY THE MANUFACTURER WITHOUT PRIOR NOTICE

Model: ACC 40C/CR

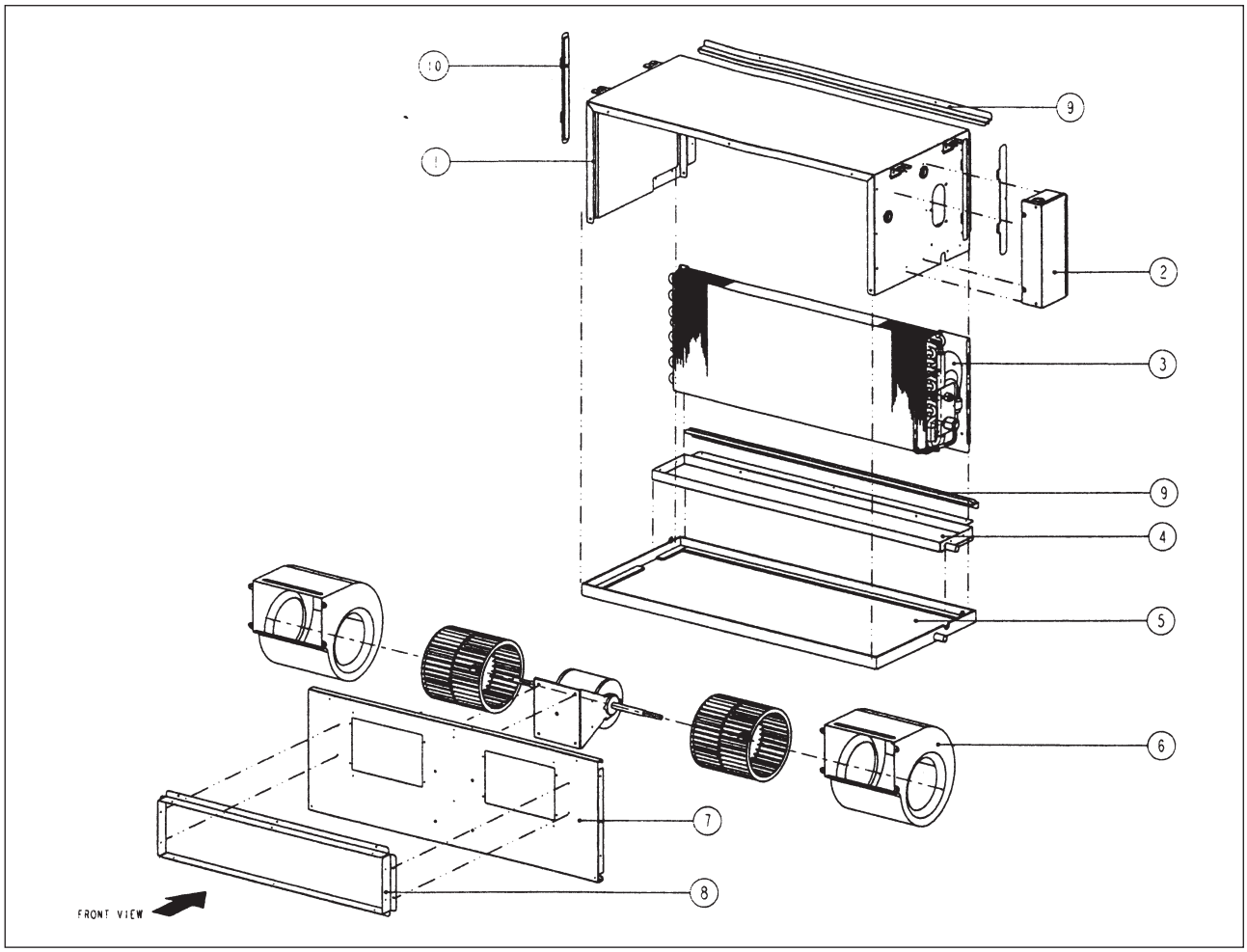

No	Description
1	Assy., Top Panel
2	-
3	Assy., Coil
4	Assy., Drain Pan (Small)
5	Assy., Drain Pan (Big)
6	Assy., Wheel & Housing - Left
	Assy., Wheel & Housing - Right
7	Panel, Blower
8	Flange, Blower
9	Filter Rail, Cover
10	Filter Rail

Parts Not in Diagram	
	Hanger
	Fan Motor
	Bracket, Motor
	Support, Bracket Motor
	Air Filter
	L2 Control Module
	Handset
	SLM cooling Only
	SLM Heat Pump

ALL SPECIFICATIONS ARE SUBJECT TO CHANGE BY THE MANUFACTURER WITHOUT PRIOR NOTICE

Model: ACC/A5CC 50C/CR

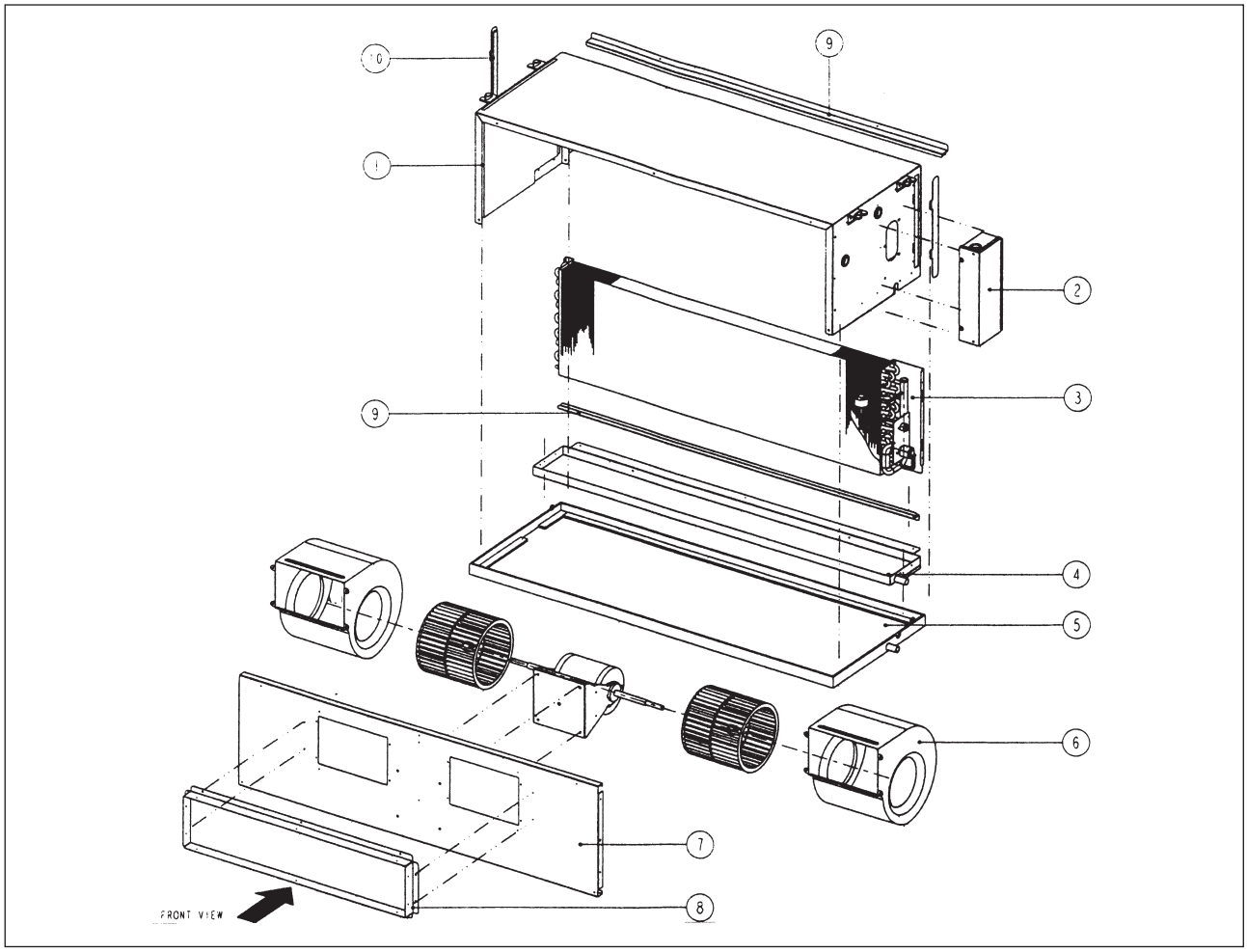

No	Description
1	Assy., Top Panel
2	-
3	Assy., Coil
4	Assy., Drain Pan (Small)
5	Assy., Drain Pan (Big)
6	Assy., Wheel & Housing - Left
	Assy., Wheel & Housing - Right
7	Panel, Blower
8	Flange, Blower
9	Filter Rail, Cover
10	Filter Rail

Parts Not in Diagram	
	Hanger
	Fan Motor
	Bracket, Motor
	Support, Bracket Motor
	Air Filter
	L2 Control Module
	Handset
	SLM cooling Only
	SLM Heat Pump

ALL SPECIFICATIONS ARE SUBJECT TO CHANGE BY THE MANUFACTURER WITHOUT PRIOR NOTICE

Model: ACC/A5CC 60C/CR

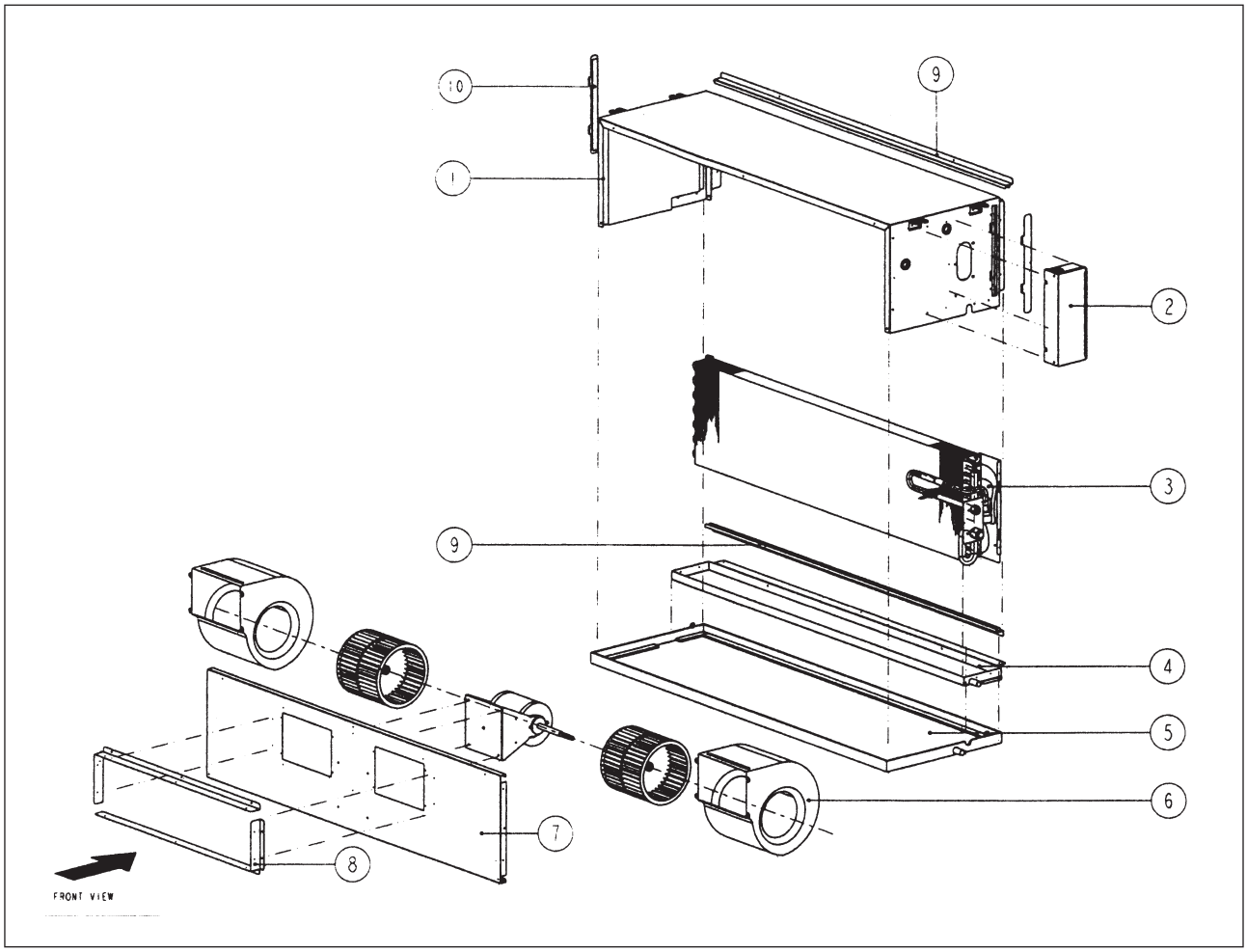

No	Description
1	Assy., Top Panel
2	-
3	Assy., Coil
4	Assy., Drain Pan (Small)
5	Assy., Drain Pan (Big)
6	Assy., Wheel & Housing - Left
	Assy., Wheel & Housing - Right
7	Panel, Blower
8	Flange, Blower
9	Filter Rail, Cover
10	Filter Rail

Parts Not in Diagram	
	Hanger
	Fan Motor
	Bracket, Motor
	Support, Bracket Motor
	Air Filter
	L2 Control Module
	Handset
	SLM cooling Only
	SLM Heat Pump

ALL SPECIFICATIONS ARE SUBJECT TO CHANGE BY THE MANUFACTURER WITHOUT PRIOR NOTICE

Model: ALC/A5LC 10/15C

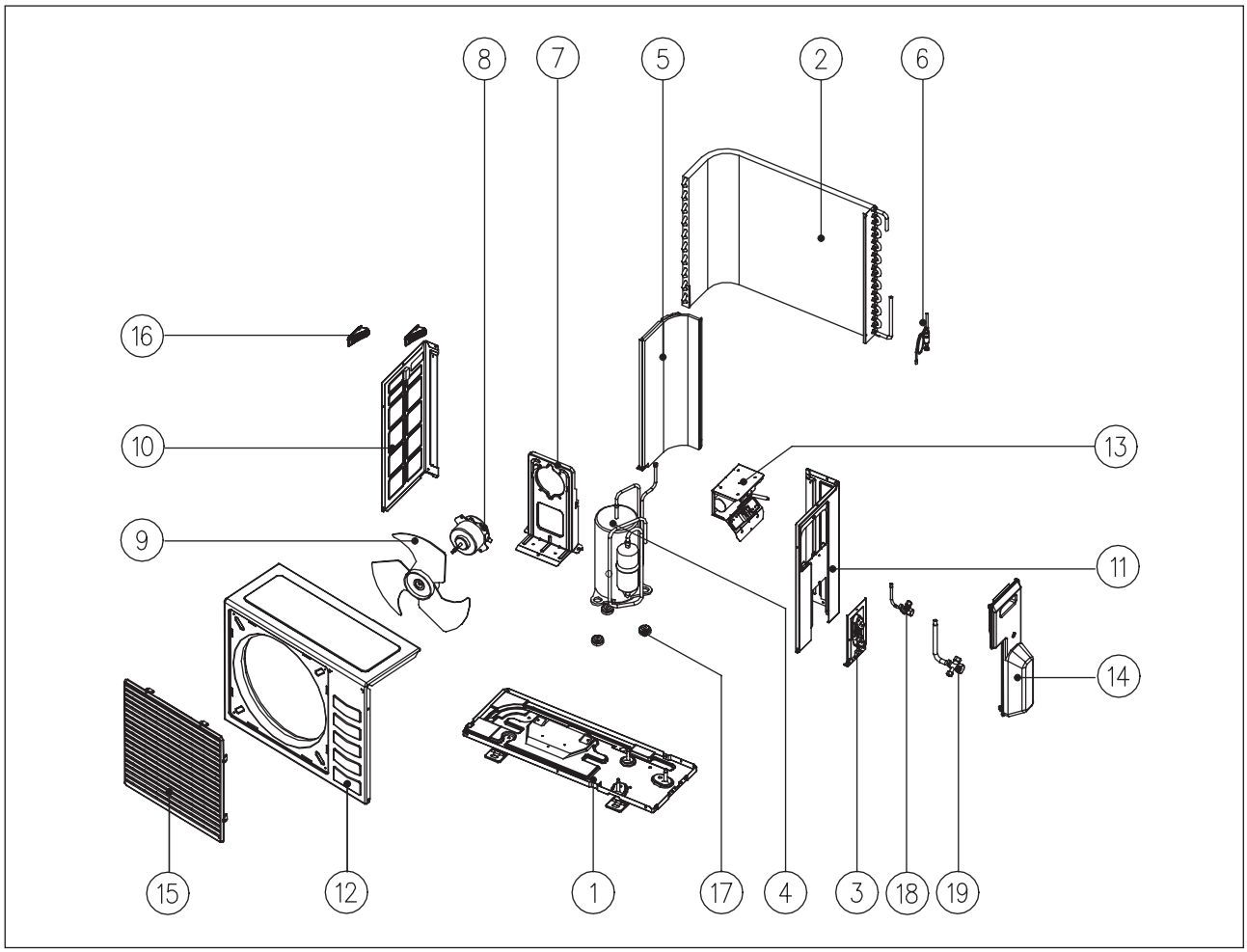

No	Description
1	Assy., Base Pan
2	Assy., Outdoor Coil
3	Valve Bracket
4	Compressor
5	Assy., Partition
6	Assy., Cap Tube
7	Bracket, Fan Motor
8	Fan Motor
9	Fan Blade
10	Left Panel
11	Right Panel

No	Description
12	Assy., Front Panel
13	Assy., Control Panel
14	Assy., Valve Cover
15	Assy., Front Grille
16	Plastic Handle
17	Rubber Grommet
18	Assy., Flare Valve 2 Ways 1/4”
19	Assy., Flare Valve 3 Ways 3/8”
Parts Not In Diagram	
	Capacitor, Fan Motor
	Capacitor, Compressor

ALL SPECIFICATIONS ARE SUBJECT TO CHANGE BY THE MANUFACTURER WITHOUT PRIOR NOTICE

Model: ALC/A5LC 10/15CR

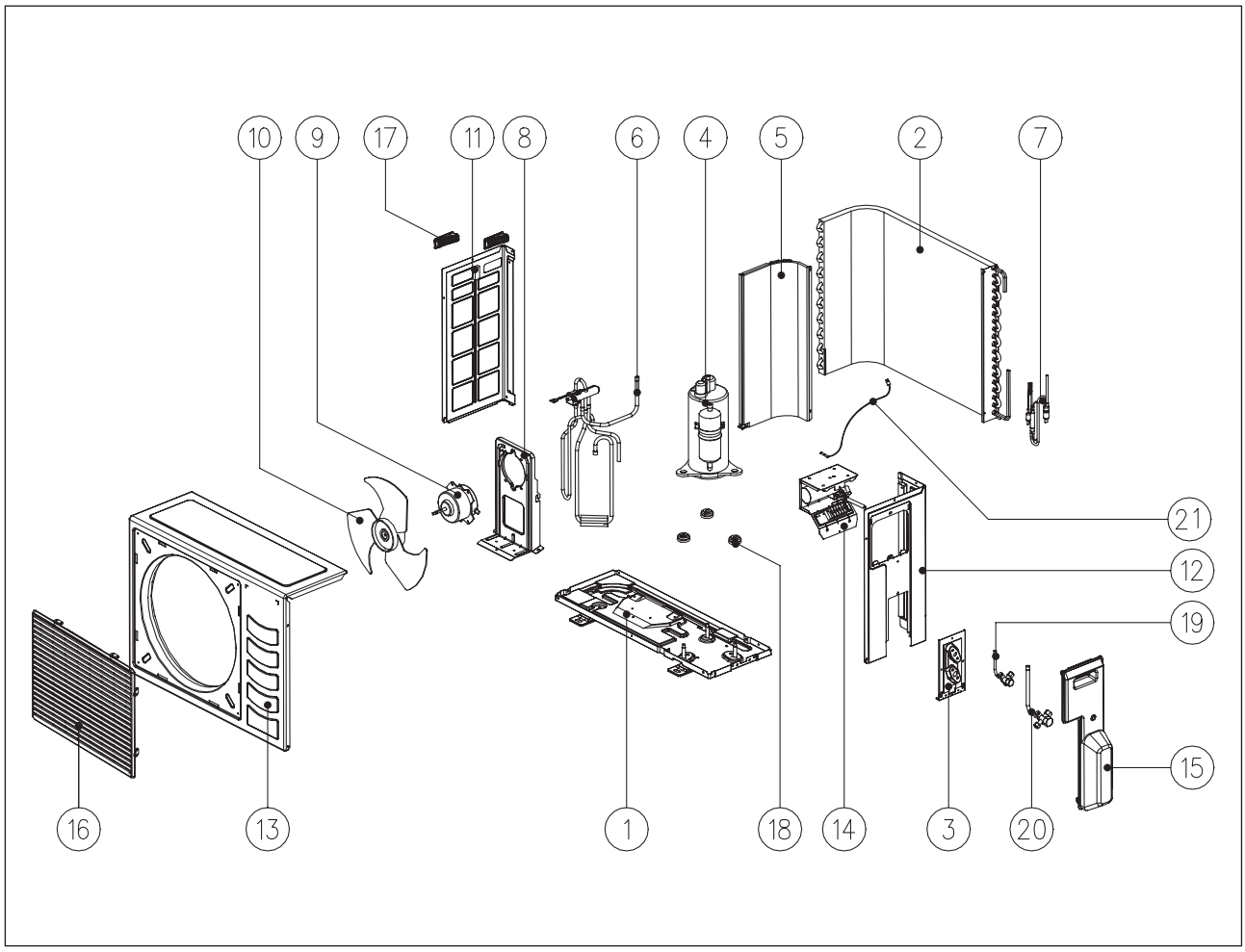

No	Description
1	Assy., Base Pan
2	Assy., Outdoor Coil
3	Valve Bracket
4	Compressor
5	Assy., Partition
6	Assy., 4 Way Valve
7	Assy., Cap Tube
8	Bracket, Fan Motor
9	Fan Motor
10	Fan Blade
11	Left Panel
12	Right Panel

No	Description
13	Assy., Control Panel
14	Assy., Control Panel
15	Assy., Valve Cover
16	Assy., Front Grille
17	Plastic Handle
18	Rubber Grommet
19	Assy., Flare Valve 2 Ways 1/4”
20	Assy., Flare Valve 3 Ways 3/8”
21	Sensor, Outdoor Defrost
Parts Not In Diagram	
	Capacitor, Fan Motor
	Capacitor, Compressor

ALL SPECIFICATIONS ARE SUBJECT TO CHANGE BY THE MANUFACTURER WITHOUT PRIOR NOTICE

Model: ALC 18/20C, A5LC 20C

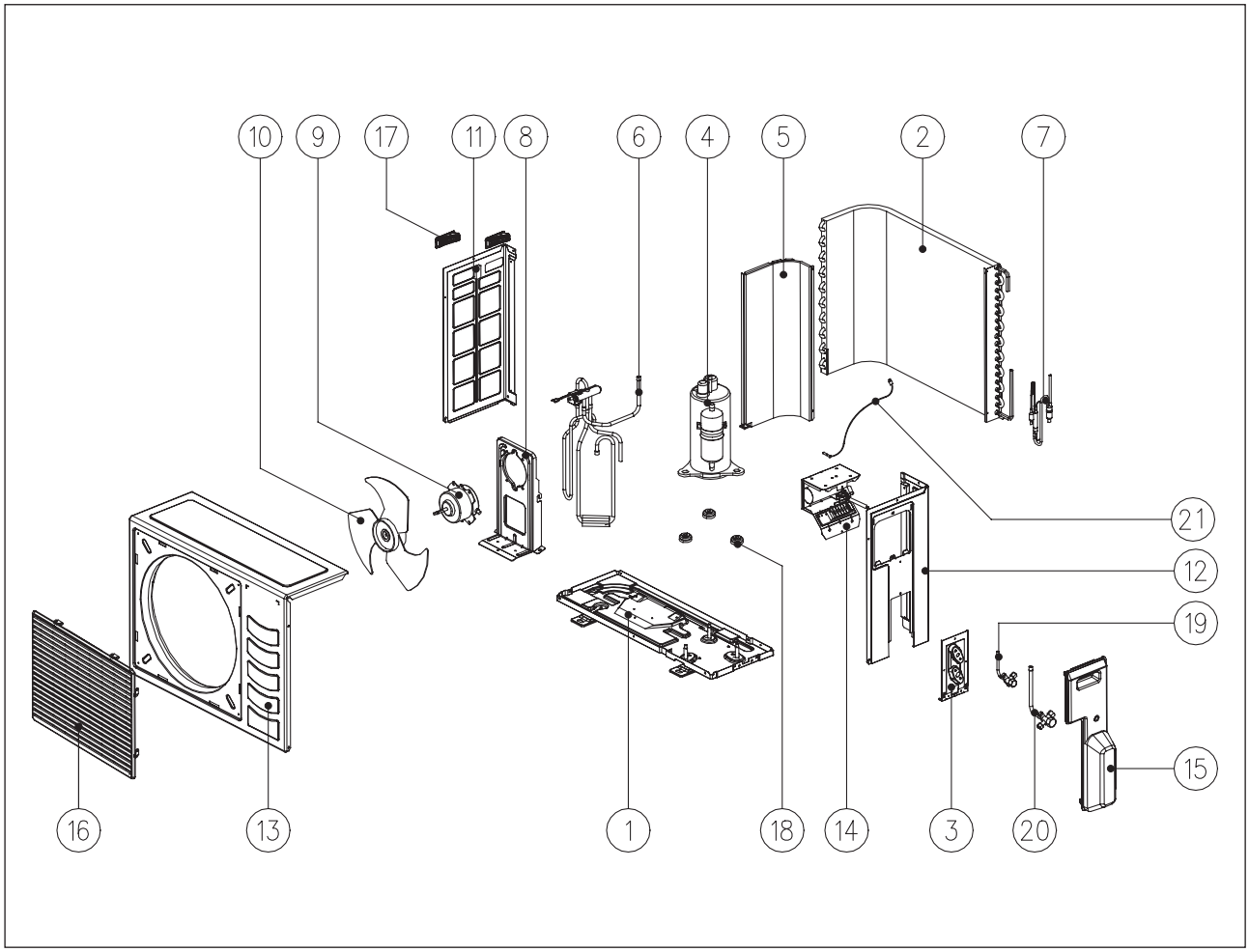

No	Description
1	Assy., Base Pan
2	Assy., Outdoor Coil
3	Valve Bracket
4	Compressor
5	Assy., Partition
6	Assy., 4 Way Valve
7	Assy., Cap Tube
8	Bracket, Fan Motor
9	Fan Motor
10	Fan Blade
11	Left Panel
12	Right Panel

No	Description
13	Assy., Control Panel
14	Assy., Control Panel
15	Assy., Valve Cover
16	Assy., Front Grille
17	Plastic Handle
18	Rubber Grommet
19	Assy., Flare Valve 2 Ways 1/4”
20	Assy., Flare Valve 3 Ways 3/8”
21	Sensor, Outdoor Defrost
Parts Not In Diagram	
	Capacitor, Fan Motor
	Capacitor, Compressor

ALL SPECIFICATIONS ARE SUBJECT TO CHANGE BY THE MANUFACTURER WITHOUT PRIOR NOTICE

Model: ALC/ A5LC 25/28C

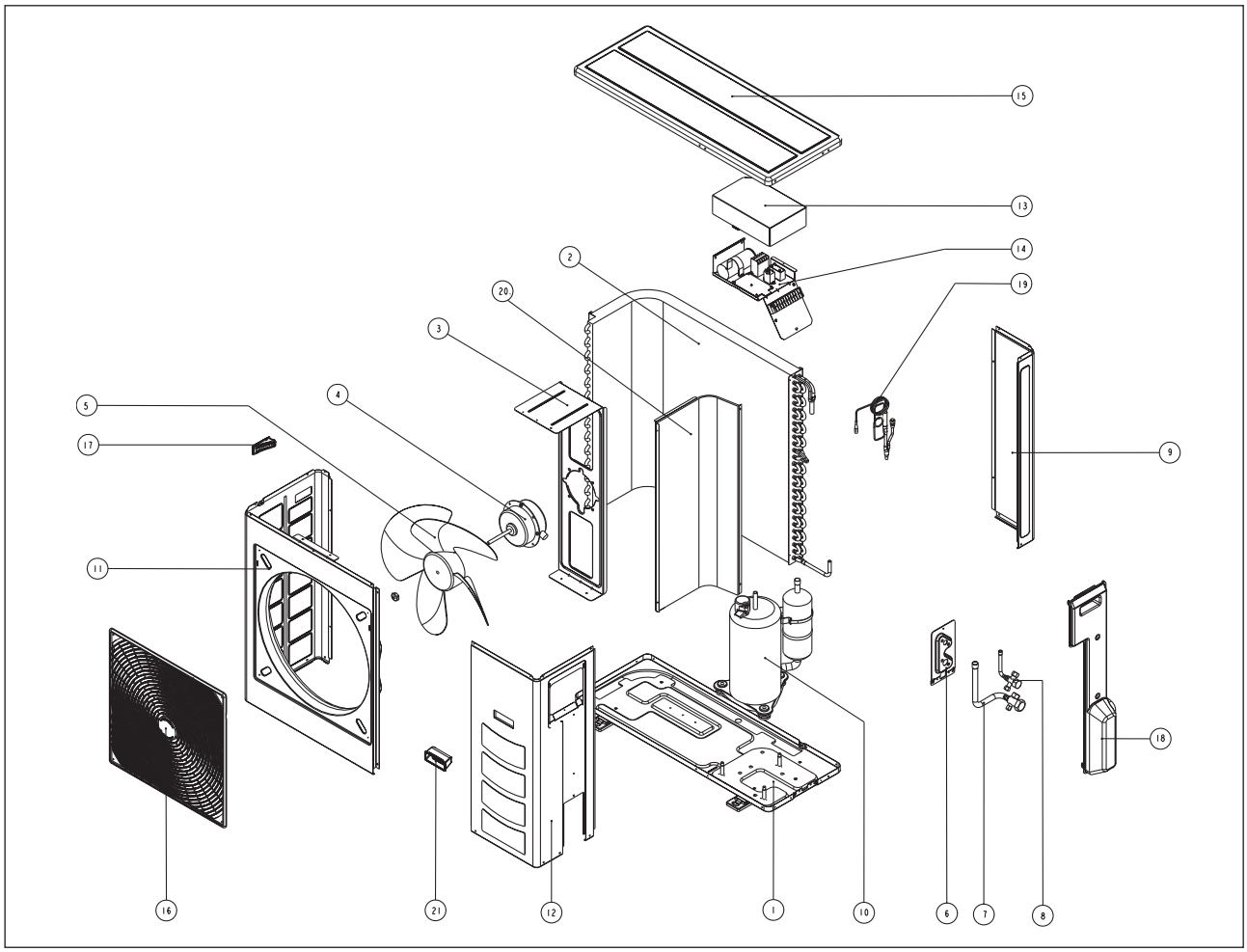

No	Description
1	Assy., Base Pan
2	Assy., Outdoor Coil
3	Motor Bracket
4	Fan Motor
5	Fan Blade
6	Valve Bracket
7	Assy., Flare Valve 3 Ways 5/8”
8	ALC 25/28C Assy., Flare Valve 3 Ways 3/8”
	A5LC 25C Assy., Flare Valve 2 Ways 1/4”
	A5LC 28C Assy., Flare Valve 3 Ways 3/8”
9	Back Panel, Right
10	Compressor

No	Description
11	Front Panel, Left
12	Service Panel
13	Terminal Cover Panel
14	Assy., Control Panel
15	Top Panel
16	Assy., Front Grille
17	Plastic Handle, Side
18	Assy., Valve Cover
19	Assy., Cap Tube
20	Partition
21	Plastic Handle, Front
Parts Not In Diagram	
	Capacitor, Fan Motor
	Capacitor, Compressor

ALL SPECIFICATIONS ARE SUBJECT TO CHANGE BY THE MANUFACTURER WITHOUT PRIOR NOTICE

Model: ALC/A5LC 20CR, ~~ALC 18CR~~

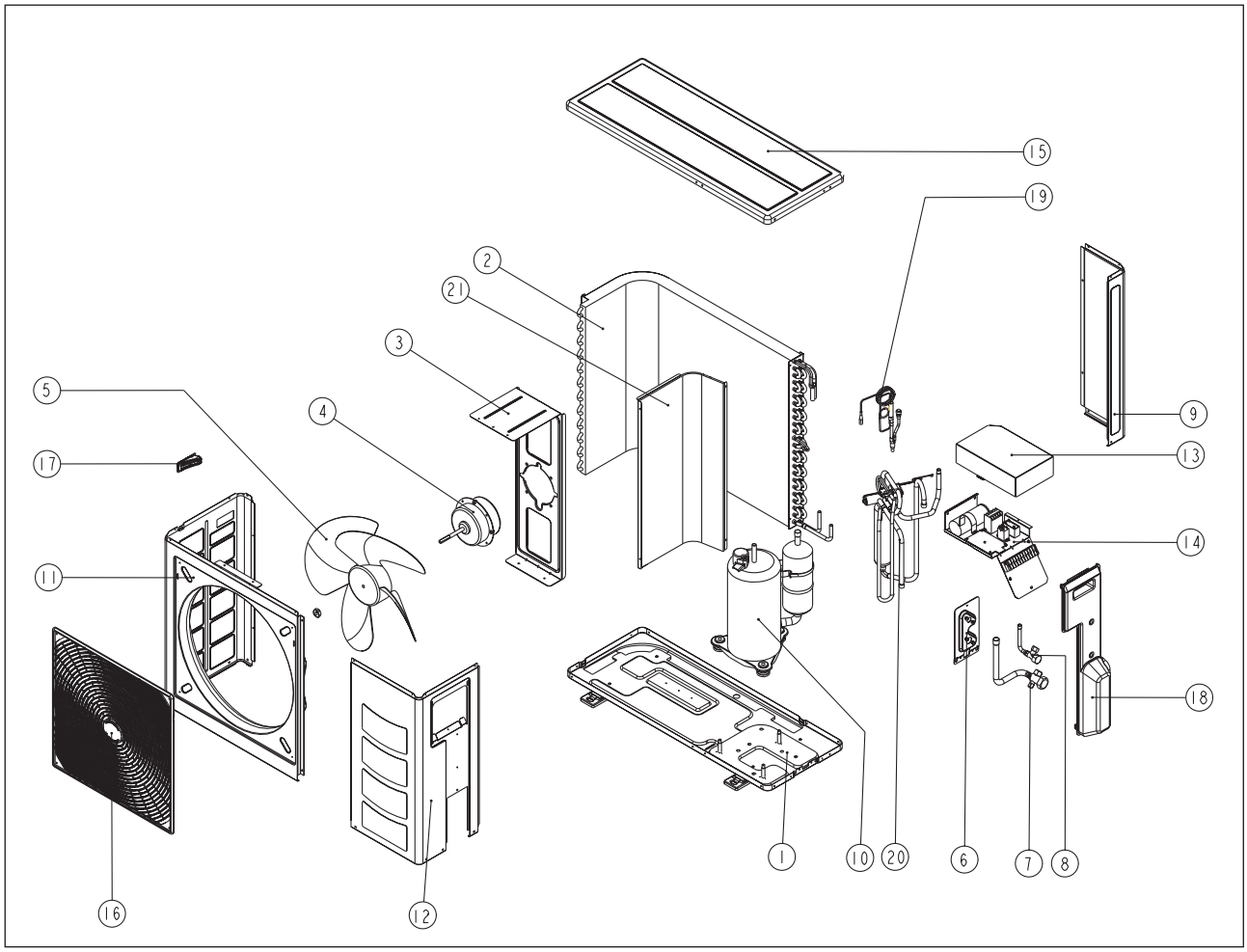

No	Description
1	Assy., Base Pan
2	Assy., Outdoor Coil
3	Motor Bracket
4	Fan Motor
5	Fan Blade
6	Valve Bracket
7	ALC 18/20CR Assy., Flare Valve 3 Ways 5/8”
	ALC 20CR Assy., Flare Valve 3 Ways 1/2”
8	Assy., Flare Valve 2 Ways 1/4”
9	Back Panel, Right
10	Compressor
11	Front Panel, Left

No	Description
12	Service Panel
13	Terminal Cover Panel
14	Assy., Control Panel
15	Top Panel
16	Assy., Front Grille
17	Plastic Handle
18	Assy., Valve Cover
19	Assy., Cap Tube
20	Assy., 4 Way Valve
21	Partition
Parts Not In Diagram	
	Capacitor, Fan Motor
	Capacitor, Compressor

ALL SPECIFICATIONS ARE SUBJECT TO CHANGE BY THE MANUFACTURER WITHOUT PRIOR NOTICE

Model: ALC/A5LC 25/28CR

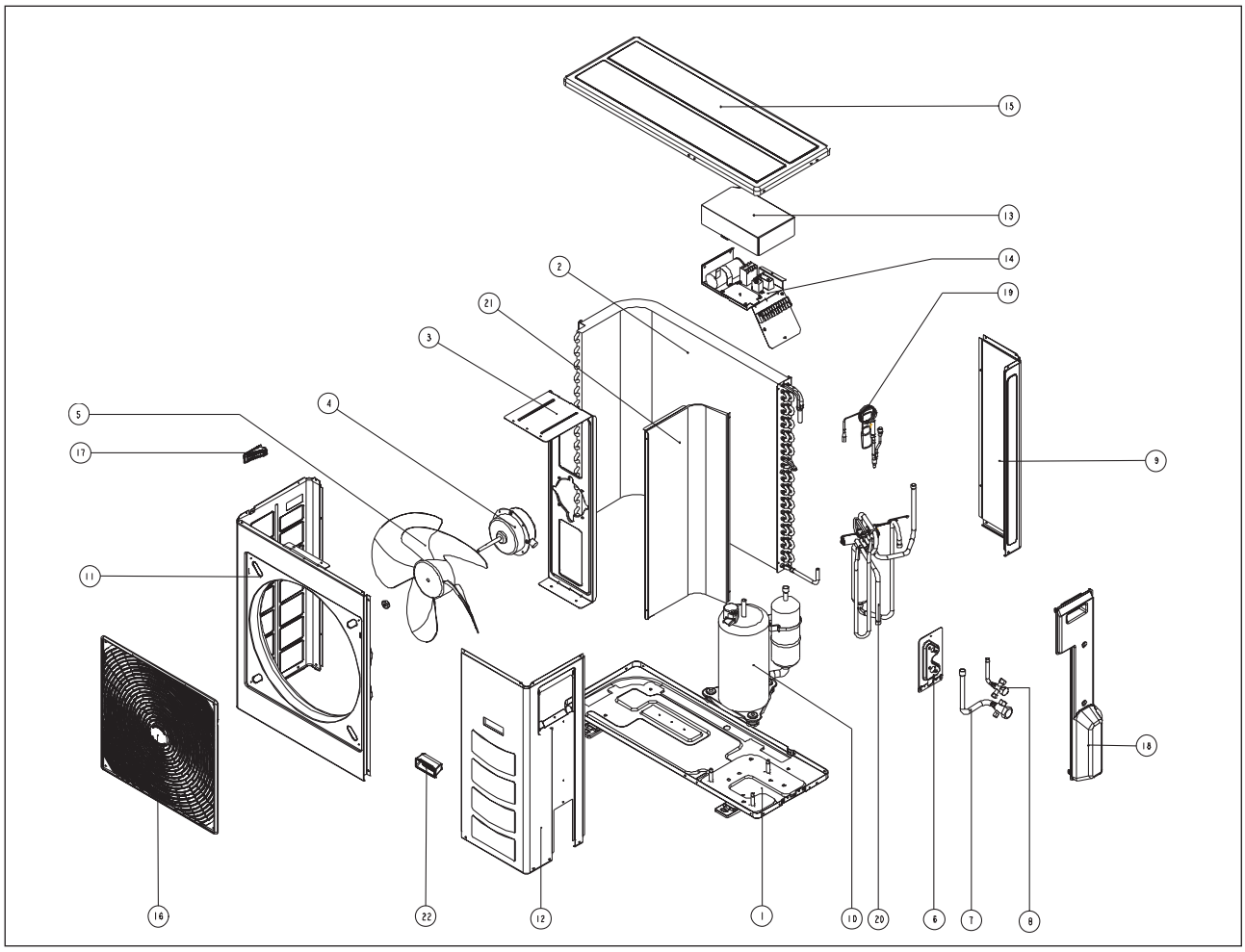

No	Description
1	Assy., Base Pan
2	Assy., Outdoor Coil
3	Motor Bracket
4	Fan Motor
5	Fan Blade
6	Valve Bracket
7	Assy., Flare Valve 3 Ways 5/8”
8	ALC 25/28CR Assy., Flare Valve 3 Ways 3/8”
	A5LC 25CR
	Assy., Flare Valve 2 Ways 1/4”
	A5LC 28CR
	Assy., Flare Valve 3 Ways 3/8”
9	Back Panel, Right
10	Compressor

No	Description
11	Front Panel, Left
12	Service Panel
13	Terminal Cover Panel
14	Assy., Control Panel
15	Top Panel
16	Assy., Front Grille
17	Plastic Handle
18	Assy., Valve Cover
19	Assy., Cap Tube
20	Assy., 4 Way Valve
21	Partition
22	Plactic Handle, Front
Parts Not In Diagram	
	Capacitor, Fan Motor
	Capacitor, Compressor

ALL SPECIFICATIONS ARE SUBJECT TO CHANGE BY THE MANUFACTURER WITHOUT PRIOR NOTICE

Model: ALC ~~30/40CR~~ 30/35/40/50/61D

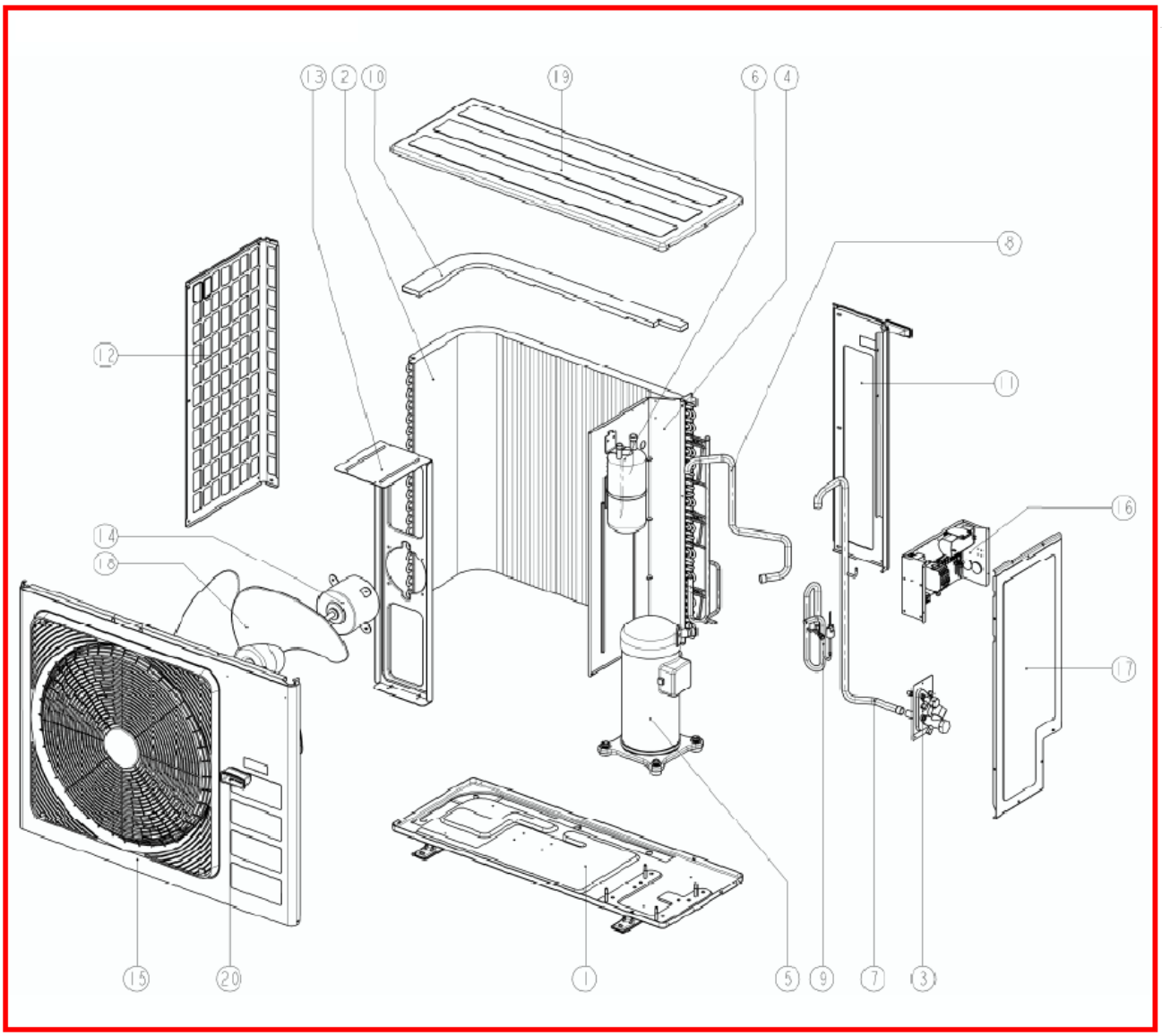

No	Description	No	Description
1	Assy. Base Pan	Parts Not in Diagram	
2	Assy. Coil		Capacitor, Compressor
3	Assy. Plate Valve		Capacitor, Fan Motor
4	Assy. Partition Ins		Phase Sequencer
5	Assy. Comp		High Pressure Switch
6	Accumulator		Low Pressure Switch
7	Assy. Tube Acc. To Outlet Valve		Assy. 4-Way Valve
8	Tube, Comp. Suction To Acc. Out		Contactor
9	Assy. Tube Discharge		
10	Assy. Pad Coil Cover		
11	Panel, Back Right		
12	Panel, Side Left		
13	Bracket, Fan Motor		
14	Motor		
15	Assy. Front Panel		
16	Assy. Control Box		
17	Panel Service		
18	Fan, Propeller		
19	Panel, Top		
20	Plastic, Handle Front		

ALC30/35/40/50/61DR
A5LC30/35/40/50DR

Model: ~~ALC/A5LC 35C/CR~~

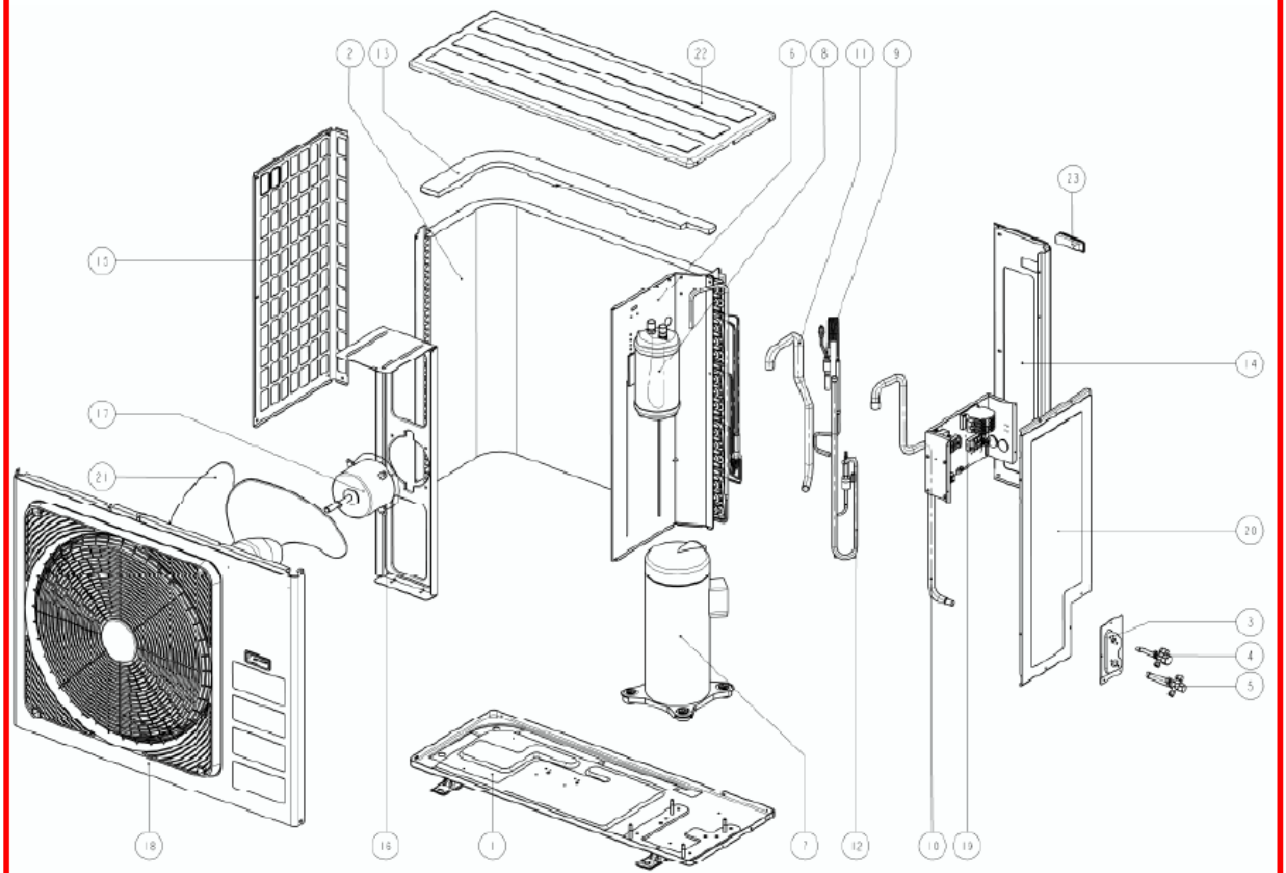

No	Description	No	Description
1	Assy. Base Pan	13	Assy. Pad Coil Cover
2	Assy. Coil	14	Panel Back Right
3	Plate, Valve	15	Panel Side Left
4	ALC/A5LC30-50DR Assy. Flare Valve 3/8"	16	Fan Motor Bracket
		17	Fan Motor
	ALC61DR Assy. Flare Valve 1/2"	18	Front Panel
		19	Assy. Control Box
5	ALC30DR/A5LC35-50D Assy. Flare Valve 5/8"	20	Service Panel
		21	Propeller Fan 24"
	ALC35-61DR/A5LC61D Assy. Flare Valve 3/4"	22	Top Panel
		23	Handling Handle
6	Assy. Partition Insulation	Parts Not in Diagram	
7	Assy. Compressor	24	Capacitor, Compressor
8	Accumulator	25	Capacitor, Fan Motor
9	Assy. Capillary Tube	26	Contactor
10	Assy. Accumulator To Valve Outlet	27	Phase Protector
11	Tube, Accumulator To Suction	28	Valve Access
12	Assy. Tube Discharge	29	4 Way Valve

Model: A5LC ~~40C/CR~~ 61DR

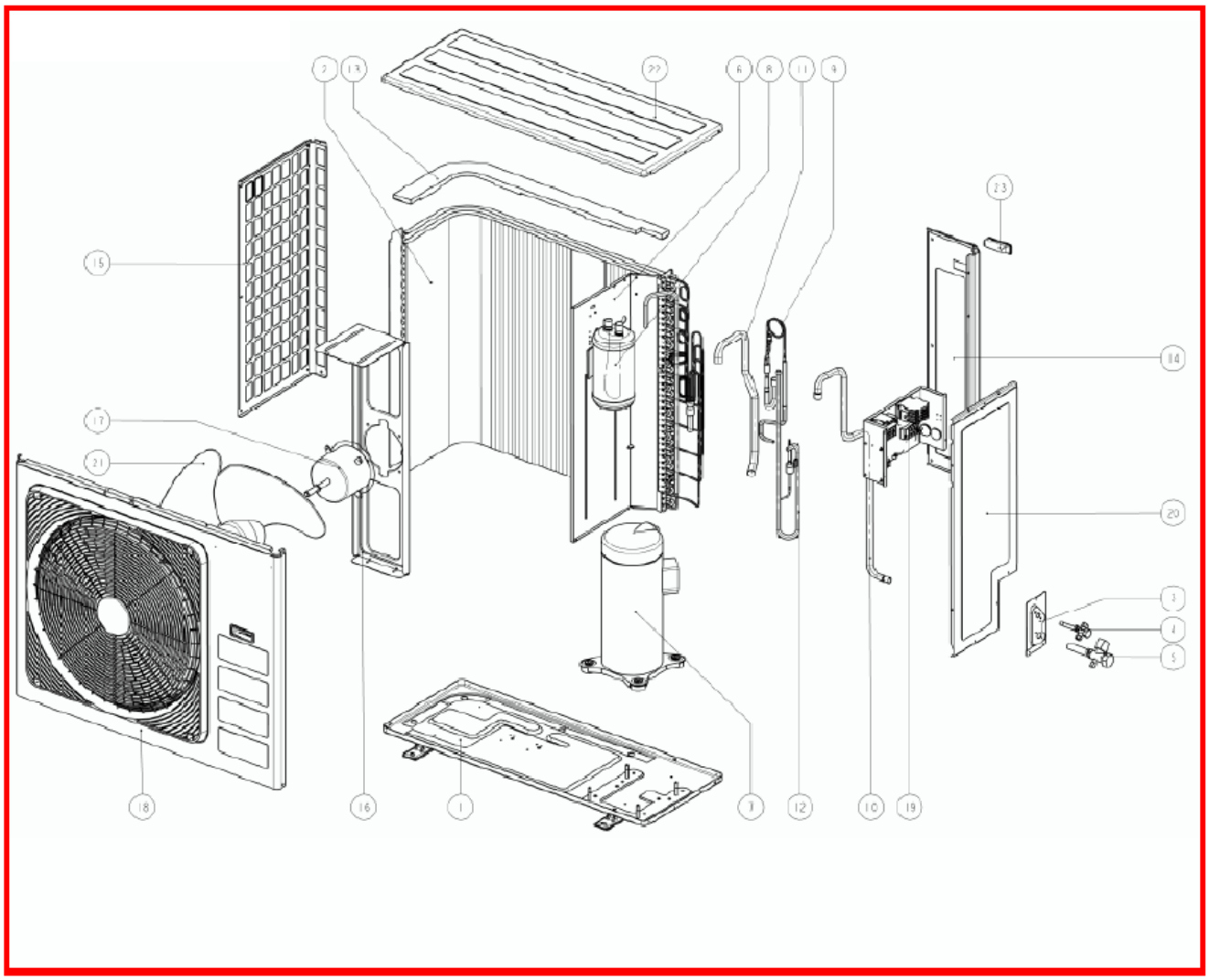

No	Description	No	Description
1	Assy. Base Pan	14	Panel Back Right
2	Assy. Coil	15	Panel Side Left
3	Plate, Valve	16	Fan Motor Bracket
4	Assy. 3 Way Valve 3/8"	17	Fan Motor
5	Assy. 3 Way Valve 3/4"	18	Front Panel
6	Assy. Partition Insulation	19	Assy. Control Box
7	Assy. Compressor	20	Service Panel
8	Accumulator	21	Propeller Fan 24"
9	Assy. Capillary Tube	22	Top Panel
10	Assy. Acc. To Valve Outlet	23	Handling Handle
11	Tube, Acc. To Suction	Parts Not in Diagram	
12	Assy. Tube Discharge		Capacitor, Compressor
13	Assy. Pad Coil Cover		Capacitor, Fan Motor
			Pressure Switch
			Contactor
			Valve, Rev 4-Way
			Phase Protector

Model: ALC 50/61C/CR

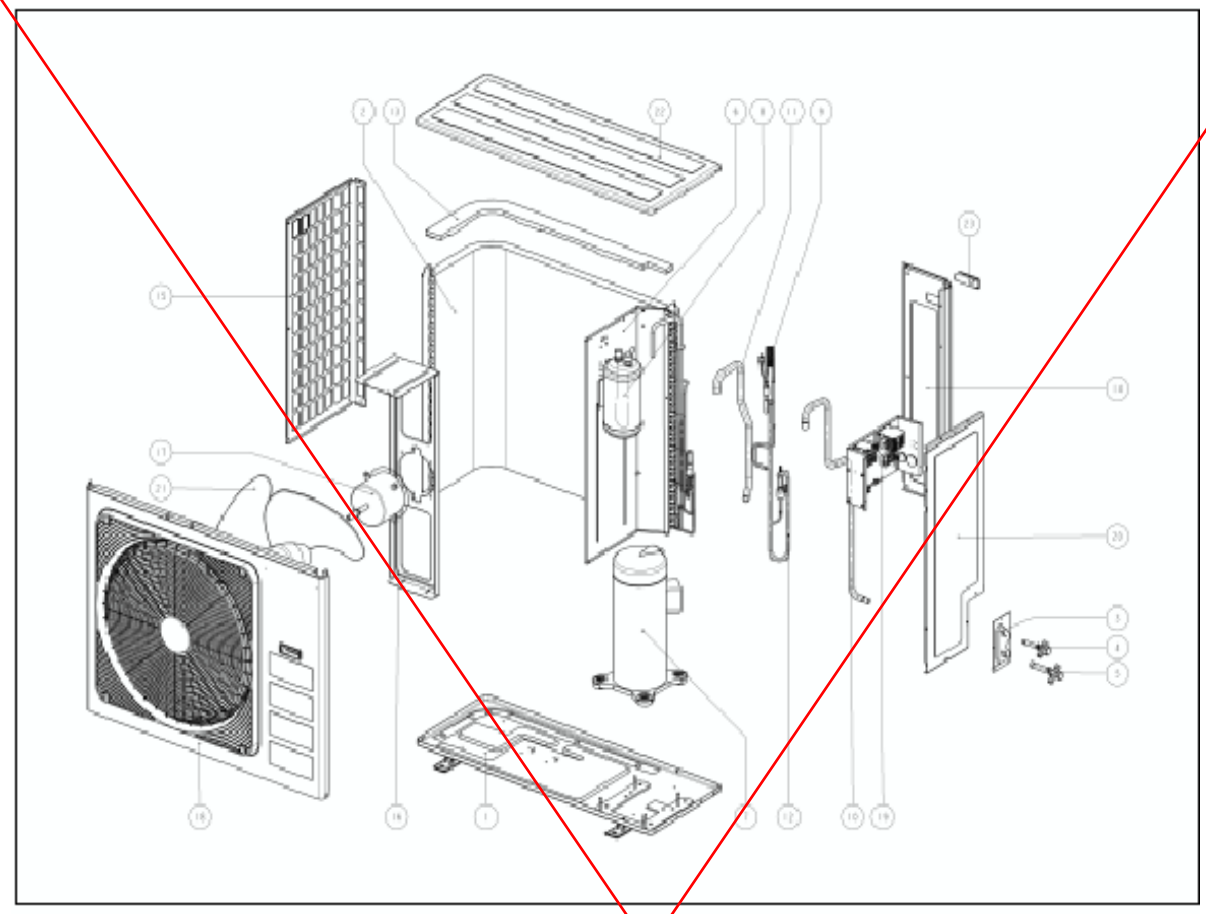

No	Description
1	Assy. Base Pan
2	Assy. Coil
3	Plate, Valve
4	Assy. Flare 3 Way Valve 3/8"
5	Assy. Flare 3 Way Valve 5/8"
6	Assy. Partition Insulation
7	Assy. Compressor
8	Accumulator
9	Assy. Capillary Tube
10	Assy. Accumulator To Valve Outlet
11	Tube, Accumulator To Suction
12	Assy. Tube Discharge
13	Assy. Pad Coil Cover
14	Panel Back Right
15	Panel Side Left

No	Description
16	Fan Motor Bracket
17	Fan Motor
18	Front Panel
19	Assy. Control Box
20	Service Panel
21	Propeller Fan 24"
22	Top Panel
23	Handling Handle
Parts Not in Diagram	
	Capacitor, Compressor
	Capacitor, Fan Motor
	Contactor
	Phase Protector
	Valve Access
	4 Way Valve

ALL SPECIFICATIONS ARE SUBJECT TO CHANGE BY THE MANUFACTURER WITHOUT PRIOR NOTICE

Model: A5LC 50/61C/CR

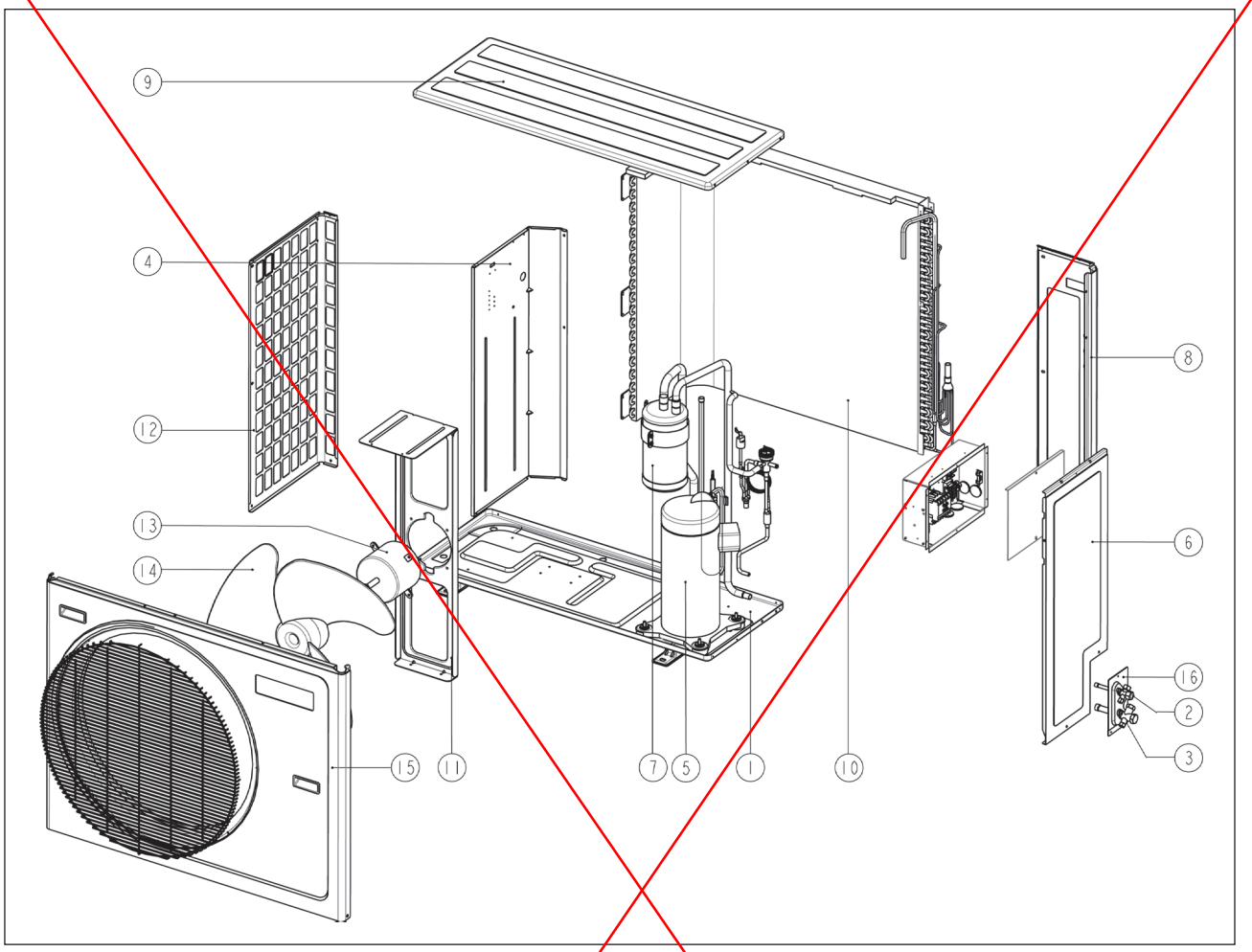

No	Description
1	Assy., Base Pan
2	Assy., Flare Valve 3/8”
3	A5LC 50C/CR Assy., Flare Valve 5/8” A5LC 61C/CR Assy., Flare Valve 3/4“
4	Panel, Partition
5	Compressor
6	Service Panel
7	Accumulator
8	Back Panel, Right
9	Top Panel
10	Assy., Coil
11	Bracket, Fan Motor

No	Description
12	Side Panel, Left
13	Fan Motor
14	Fan Blade
15	Assy., Front Panel
16	Plate, Flare Valve
Parts Not In Diagram	
	Phase Sequencer\
	High Pressure Switch
	Low Pressure Switch
	Assy., 4 Way Valve
	Capacitor, Fan Motor
	Contactor
	Assy., Cap. Tube

ALL SPECIFICATIONS ARE SUBJECT TO CHANGE BY THE MANUFACTURER WITHOUT PRIOR NOTICE

ACSON International

CE

While upmost care is taken in ensuring that all details in the publication are correct at time of going to press, we are constantly striving for improvement and therefore reserve the rights to alter model specifications and equipment without prior notice. Details of specifications and equipment are also subject to change to suit local conditions and requirements and not all models are available in every market.

Revision History List

Manual : Ceiling Concealed Split Systems | **TM : ACC-C_(i)**

Revision	Subject	Amendment on Manual's Page No.	Date
0005	Correction on product line-up (replacement of ALC-C with ALC-D Series)	6, 7	18.08.2011
	Correction on refrigerant circuit diagram (replacement of ALC-C with ALC-D Series)	11, 12, 16, 17	
	Correction on refrigerant piping length (replacement of ALC-C with ALC-D Series and piping length change)	22	
	Correction on additional charge (replacement of ALC-C with ALC-D Series)	24	
	Correction on general data (replacement of ALC-C with ALC-D Series, correction on unit and packing dimension, EER, COP, capacity, unit weight and testing standard)	80-84, 88-92, 95-97, 100-103, 106-114	
	Correction on component data (replacement of ALC-C with ALC-D series, correction on motor IP value)	116-122, 124-130, 132, 134-135, 137, 139-140	
	Correction on safety devices (replacement of ALC-C with ALC-D Series)	141-147	
	Correction on performance data (replacement of ALC-C with ALC-D Series)	157-163, 170-182, 187-190, 199-204	
	Correction on dimensional data (replacement of ALC-C with ALC-D series)	208	
	Correction on electrical data (replacement of ALC-C with ALC-D Series, correction on outdoor fan motor input power, rated running current and locked rotor amp)	210-212, 214-216, 218-219, 221-222	
	Correction on wiring diagram (replacement of ALC-C with ALC-D Series)	229-232, 237-243, 245-246	
	Correction on exploded view and part list	269-272	
	New wiring diagram for ALC61D-FCYOA	Appendix 1	
0006	Correction on general data (Expansion devices)	97, 102	09.11.2011
	Correction on component data (Outdoor fan motor IP value)	116-140	
	Correction on electrical data (Outdoor fan motor insulation class)	210-222	
0007	Correction on performance data (Wrong model title)	189	27.12.2011

Amendment Sheet

Manual : Ceiling Concealed Split Systems | **TM : ACC-C_(i)**

Revision Table

Revision	Subject	Amendment on Manual's Page No.	Date
0008	1. ALC18CR removed from Outdoor Unit Classification table	6	28.03.2014
	2. Combination of ACC20CR and ALC18CR is removed from Refrigeration Circuit Diagram	14	
	3. ALC18CR removed from R22 Piping Size table	22	
	4. ALC18CR removed from R22 Heatpump Additional Charge table	24	
	6. Combination of ACC20CR and ALC18CR is removed from Engineering data	86	
	7. Combination of ACC20CR and ALC18CR is removed from Heat Pump R22 Low Static Engineering data	110	
	8. ALC18CR removed from R22 Component Data	124	
	9. ALC18CR removed from Safety Devices table	143	
	10. Combination of ACC20CR and ALC18CR is removed from Performance data	166	
	9. ALC18CR removed from Electrical Data R22 Heatpump	213	
	10. ALC18CR removed from Wiring Diagrams	235	
	11. ALC18CR removed from Exploded view and part list	267	

Appendix 1

Indoor Unit
Model : ACC 60C

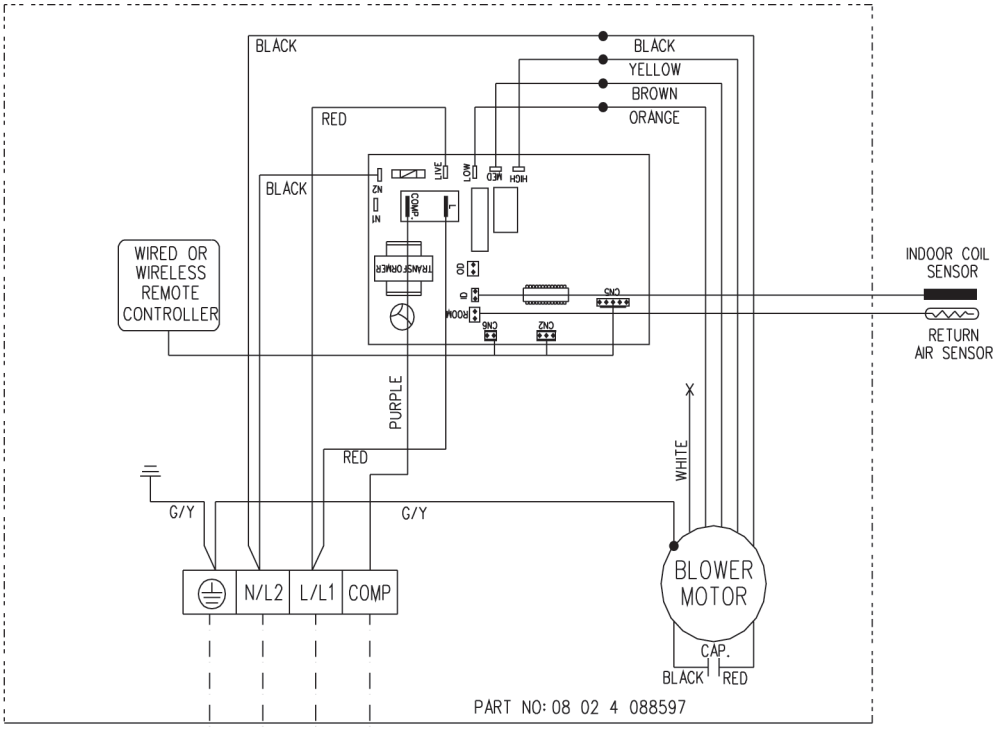

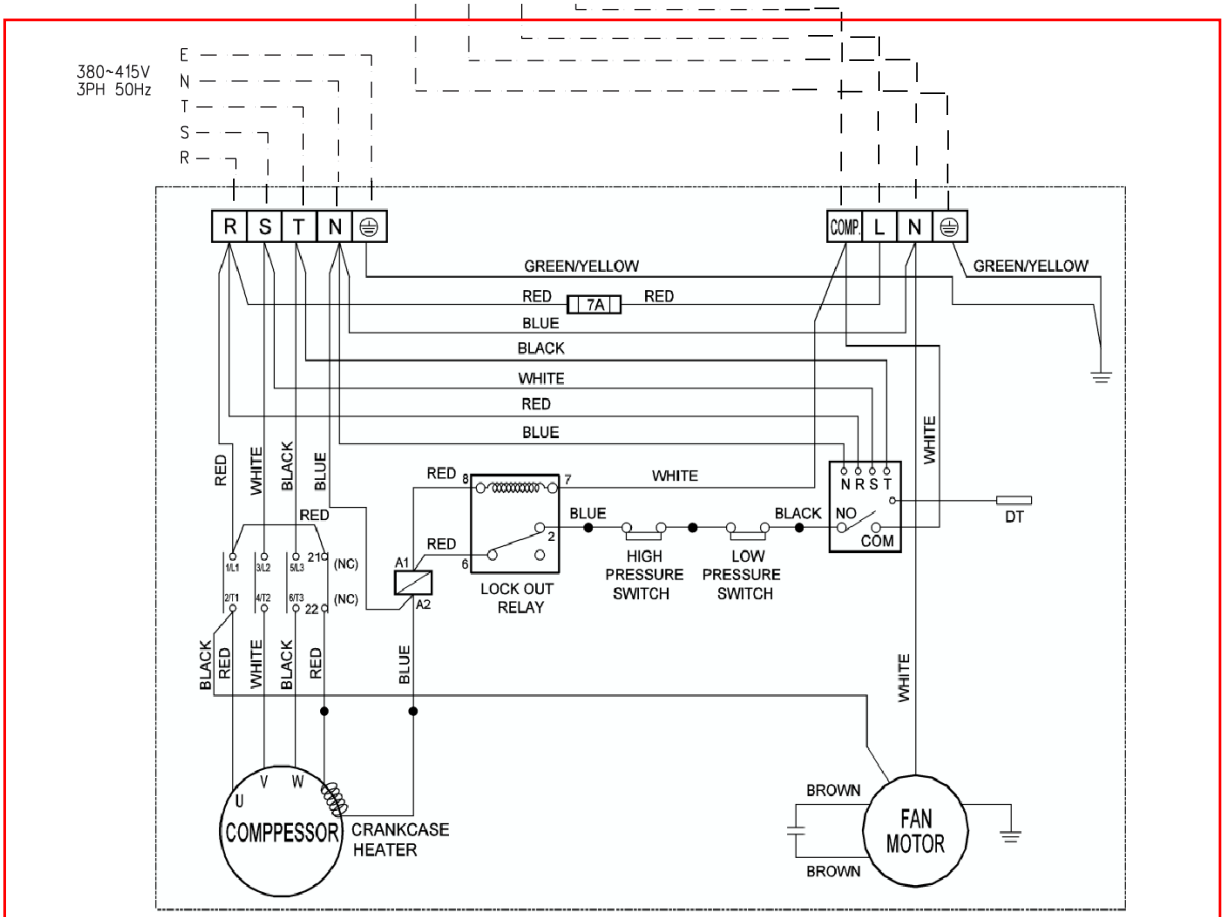

Outdoor Unit
Model : ALC ~~61C~~
61D